This is a digital copy of a book that was preserved for generations on library shelves before it was carefully scanned by Google as part of a project to make the world's books discoverable online.

It has survived long enough for the copyright to expire and the book to enter the public domain. A public domain book is one that was never subject to copyright or whose legal copyright term has expired. Whether a book is in the public domain may vary country to country. Public domain books are our gateways to the past, representing a wealth of history, culture and knowledge that's often difficult to discover.

Marks, notations and other marginalia present in the original volume will appear in this file - a reminder of this book's long journey from the publisher to a library and finally to you.

Usage guidelines

Google is proud to partner with libraries to digitize public domain materials and make them widely accessible. Public domain books belong to the public and we are merely their custodians. Nevertheless, this work is expensive, so in order to keep providing this resource, we have taken steps to prevent abuse by commercial parties, including placing technical restrictions on automated querying.

We also ask that you:

+ *Make non-commercial use of the files* We designed Google Book Search for use by individuals, and we request that you use these files for personal, non-commercial purposes.

+ *Refrain from automated querying* Do not send automated queries of any sort to Google's system: If you are conducting research on machine translation, optical character recognition or other areas where access to a large amount of text is helpful, please contact us. We encourage the use of public domain materials for these purposes and may be able to help.

+ *Maintain attribution* The Google "watermark" you see on each file is essential for informing people about this project and helping them find additional materials through Google Book Search. Please do not remove it.

+ *Keep it legal* Whatever your use, remember that you are responsible for ensuring that what you are doing is legal. Do not assume that just because we believe a book is in the public domain for users in the United States, that the work is also in the public domain for users in other countries. Whether a book is still in copyright varies from country to country, and we can't offer guidance on whether any specific use of any specific book is allowed. Please do not assume that a book's appearance in Google Book Search means it can be used in any manner anywhere in the world. Copyright infringement liability can be quite severe.

About Google Book Search

Google's mission is to organize the world's information and to make it universally accessible and useful. Google Book Search helps readers discover the world's books while helping authors and publishers reach new audiences. You can search through the full text of this book on the web at `http://books.google.com/`

Richard Russell Smith
347 E Poplar St
Stockton, Cal.

THE LIBRARY
OF
THE UNIVERSITY
OF CALIFORNIA

GIFT OF
Dr. William H. Ivie

THE GASOLINE AUTOMOBILE

Its Design and Construction

VOLUME II

Transmission, Running Gear and Control

By
P. M. HELDT
Technical Editor of The Horseless Age

Second Edition

P. M. HELDT
Nyack, N. Y.
1917

Copyrighted by
P. M. HELDT
1917
Previous Copyright, 1913.

Add'l
GIFT

(All Rights Reserved)

TL205
H5
1912
v.2

PREFACE.

DURING the period that intervened between the original writing of this volume and the present revision, a number of notable evolutions took place in the design of some of the component parts which are dealt with here. The most important of these was undoubtedly the introduction of the helical bevel gear drive. The adoption of this drive confronted automobile engineers with new problems, chiefly in regard to bearing loads; these are discussed in some detail in the present edition and rules for the calculation of the bearing loads are given.

While the bevel-spur and the internal gear drive were both in use at the time the first edition was prepared, only a single firm was prominently identified with each in the United States, so they were not deemed of sufficinent importance to warrant special treatment. Since then, however, the internal gear drive has made notable progress in this country and the bevel-spur drive has assumed some importance in England. At the same time additional interest has been aroused in the four wheel drive for military and similar trucks, so it was decided to add a chapter covering these three forms of final drive.

The advent of the high speed motor, together with a great increase in the use of unit power plants, resulting in the lengthening of propeller shafts, has compelled designers to give more attention to the problem of critical speeds in shafts. Some matter on this subject has been incorporated in the Chapter on The Bevel Gear Drive and Rear Axle, the theory of critical speeds being explained and rules for their calculation given.

Another branch of automobile engineering in which great commercial development has taken place during the past four years is that relating to the worm drive. The chapter devoted to this subject has been largely rewritten and brought up to date. Minor additions and changes have been made throughout the book, and a number of typographical and other errors that occurred in the first edition have been corrected. For pointing out such errors the author wishes to thank some of his readers.

M809109

PREFACE.

It may appear that in the chapters on the Sliding Change Gear and on Rear Axles, the annular ball bearing receives more attention than is warranted by the scale of its present day use. Owing —at least in part—to the interruption of imports of ball bearings from Europe, roller bearings now predominate largely in automobile construction. The problems of mounting, however, are very much the same as with ball bearings, and numerous examples of mounting roller bearings are given in the plates at the end of the book as well as in the text illustrations. In the most expensive cars the annular ball bearing still retains a prominent place, and it was, therefore, not deemed necessary to rewrite this part of the work.

As nearly all of the old plates had to be discarded it was decided to incorporate the plates in the book itself. Chassis views are shown for the most part in half tone, so the line cuts show only chassis components and these can be presented on a sufficiently large scale on a 5¼x8¼ sheet.

THE AUTHOR.

LIST OF CHAPTERS

CHAPTER I.
GENERAL LAYOUT OF CARS 3

CHAPTER II.
FRICTION CLUTCHES 13

CHAPTER III.
SLIDING CHANGE SPEED GEARS 70

CHAPTER IV.
PLANETARY CHANGE SPEED GEARS 125

CHAPTER V.
FRICTION DISC DRIVE 147

CHAPTER VI.
UNIVERSAL JOINTS 160

CHAPTER VII.
DIFFERENTIAL GEARS 180

CHAPTER VIII.
UNIT POWER PLANTS, TRANSMISSION AXLES 193

CHAPTER IX.
BEVEL GEAR DRIVE AND REAR AXLE 203

CHAPTER X.
THE WORM GEAR DRIVE 293

CHAPTER XI.
THE CHAIN DRIVE 323

CHAPTER XII.
BEVEL-SPUR GEAR, INTERNAL GEAR AND FOUR WHEEL DRIVES. 341

CHAPTER XIII.
BRAKES 357

CHAPTER XIV.
FRONT AXLES 386

CHAPTER XV.
STEERING GEARS 411

CHAPTER XVI.
CONTROL 441

CHAPTER XVII.
FRAMES 471

CHAPTER XVIII.
SPRINGS 497

CHAPTER XIX.
ROAD WHEELS 528
APPENDIX 543
PLATES 571

LIST OF PLATES.

CHANGE SPEED GEAR OF THE PACKARD TWELVE..... 571
DRY DISC CLUTCH OF CHALMERS 6-30..... 572
BROWN-LIPE DRY DISC CLUTCH ON CUNNINGHAM CAR.... 573
MARMON CONE CLUTCH..... 574
SIMPLEX LUBRICATED DISC CLUTCH..... 575
MUNCIE CLUTCH AND CHANGE GEAR..... 576
CASE CLUTCH AND CHANGE GEAR..... 577
BORG & BECK PLATE CLUTCH AND COVERT CHANGE GEAR.... 578
TIMKEN TRUCK FRONT AXLE (7200 LBS. MAX. LOAD)..... 579
"AMERICAN" PLEASURE CAR REAR AXLE..... 580
TIMKEN PLEASURE CAR REAR AXLE..... 581
TIMKEN WORM DRIVE TRUCK REAR AXLE..... 582
TORBENSEN INTERNAL GEAR DRIVE TRUCK AXLE..... 583
TWO FRENCH INTERNAL GEAR TRUCK DRIVES..... 584
"AMERICAN" PLEASURE CAR FRONT AXLE..... 585
FRANKLIN STEERING GEAR..... 586
BENZ STEERING GEAR..... 587
PEERLESS TRUCK STEERING GEAR..... 588
SPICER PROPELLER SHAFT ASSEMBLY..... 589
FRANKLIN THROTTLE CONTROL ASSEMBLY..... 589
PLAN VIEW OF LIPPARD-STEWART 1000 LB. TRUCK CHASSIS 590
SIDE ELEVATION OF LIPPARD-STEWART 1000 LB. TRUCK CHASSIS 591
WINTON SPARK AND THROTTLE CONTROL (ABOVE) AND CLUTCH AND BRAKE CONTROL (BELOW)..... 592
PLAN VIEW OF INTERSTATE FOUR CYLINDER CHASSIS..... 593
LEXINGTON-HOWARD SIX CYLINDER CHASSIS..... 594
PLAN VIEW OF LEXINGTON-HOWARD CHASSIS..... 595
CADILLAC EIGHT CYLINDER CHASSIS MODEL 55..... 596
PLAN VIEW OF CADILLAC EIGHT CYLINDER CHASSIS..... 597
PACKARD FIVE TON TRUCK CHASSIS..... 598
PLAN VIEW OF PACKARD FIVE TON TRUCK CHASSIS..... 599
PLAN VIEW OF STUDEBAKER FOUR CYLINDER CHASSIS..... 600
PLAN VIEW OF AUBURN FOUR CYLINDER CHASSIS..... 601
PLAN VIEW OF HUDSON SUPER-SIX CHASSIS..... 602

CHAPTER I.

GENERAL STRUCTURE OF THE CAR.

Location of Motor—In the first attempts to build road vehicles propelled by gasoline motors the general lines of horse vehicles were followed. The latter were then regarded as the highest type of vehicular design, and any departure from their lines was thought to be undesirable, as it offended the eye. This made it necessary to place the power plant under the body, and considerable difficulty was often experienced in getting it into this cramped space. It was thought essential to conceal the mechanical part of the vehicle as much as possible, because what people wanted was a self-moving carriage and not a road locomotive or a machine akin thereto. Before long, however, some bold spirit stood up for the idea that the power plant deserved such a location on the vehicle that it could be designed without regard to the space available in the body, and that when it required attention it could be reached quickly and without disturbing the passengers. The precedent then set has since been generally followed, and with very few exceptions the motor is now located at the front of the car under a bonnet. It is hardly necessary to add that the public's conception of what a motor vehicle should look like has greatly changed since then.

Spring Suspension of Power Plant—The early automobiles built in this country, almost without exception, had reach rods or perches extending between the front and rear axles, the object of which was to free the body springs of the driving thrust. Some designers then placed the power plant on these reaches, so as to simplify the problem of transmission to the wheels. It was soon recognized, however, that, even though pneumatic tires were used, the vibration was so strong that it was practically impossible to keep the motor intact. Moreover, the hammering effect of the heavy unsprung weight

on the axles, wheels and tires greatly reduced the life of these parts. The principle was thus established that as much as possible of the weight of the car should be supported on springs, and above all the more delicate parts, such as the motor.

Number of Wheels—The great majority of all automobiles have four wheels. This is the minimum number which insures stability under all reasonable conditions. Howevei cars have been and are being built with as few as three and as many as eight wheels. The smaller number of wheels is used to reduce the manufacturing cost of small vehicles, while the larger numbers, above four, are used either to keep the load per wheel inside a certain maximum (as required by the road laws in some countries) or to insure greater comfort of riding. However, certainly more than 99 per cent. of all automobiles (not including motorcycles) are of the four wheeled type, and this construction may be considered standard.

Steering and Driving—With the number of wheels decided upon, the question arises as to how many and which shall be used for steering, and how many and which shall be used for driving. With a four wheeled vehicle it is possible to steer with either the front wheels, the rear wheels or all four wheels, and to propel the vehicle by either one front wheel, one rear wheel, both front wheels, both rear wheels or all four wheels. In this connection it must be borne in mind that the effectiveness of both steering and driving depends upon the adherence—the resistance to slippage—between the wheels and the ground, which in turn depends upon the weight carried by the wheels. As far as steering is concerned, at least two wheels have to be used for it in a four wheeled vehicle, and if one-third or more of the total load is carried on these wheels, then the requirement of positive steering is met in a satisfactory degree. As regards the choice between the front and rear wheels for steering purposes, the front wheels possess one important advantage over the rear wheels, and that is that, if a car stands alongside of a curb or other barrier, and it is desired to drive away from it, with rear steering this can only be done by backing up, because in order to cause the car to turn away from it in driving forward, the steering wheels would have to be turned toward the curb and would run into it. Rear steering was used for many years on electric cabs in New York City, but the disadvantage mentioned is greatly against it,

and has been one of the points that led to its abandonment. The only advantage of four wheel steering would be that with a certain maximum deflection or "lock" of the steering wheels, a car with four wheel steering could turn in a much smaller radius than one with two wheel steering. Four wheel steering, however, would be subject to the disadvantage of rear wheel steering referred to in the foregoing, and the further disadvantage of the complication involved in combined driving and steering wheels, which more than offset its slight advantage, and it is therefore never used.

As regards the number of driving wheels, it would greatly simplify the problem of transmitting the power from the motor to its point of application if only a single wheel was used for driving. The simplification which results from this arrangement, as compared with that in which two wheels are used for driving, is one of the main considerations which lead to the selection of three wheeled construction in certain instances. However, in order that a vehicle may have plenty of traction or road adherence under all conditions, even on steep grades with greasy road surface, at least 50 per cent. of the total weight to be propelled must be carried on the driving wheel or wheels. Besides, in the ordinary four wheeled vehicle, if power was applied to one wheel—in other words, at one side only—it would tend to cause the car to slew or skid easily and affect the steering unfavorably. Driving through at least two wheels is therefore considered essential to successful operation. As to whether the front or the rear wheels should be driven, one thing that is largely determining in this matter is that the front wheels are used for steering, and it involves considerable mechanical complication to use the same wheels for both driving and steering. Moreover, if the motor is located at the front end of the car it can more easily be placed in driving connection with the rear wheels than with the front wheels. It must be remembered that the motor is carried upon a spring supported frame, and therefore constantly changes its position with relation to the axles; this relative change in position must be allowed for by some form of flexible connection, and this can be done more easily if the motor is at a considerable distance horizontally from the axle to which it is connected in driving relation. There are several real advantages in front driving. Owing to the fact that the propelling force acts at a tangent to the circumference of the driving wheels, if the

front wheels are drivers, and they drop into a mud puddle, for instance, they tend to climb out of it, as it were, while with rear drive the combined effect of the forward thrust of the rear wheels and the weight on the front wheels may force the latter deeper into the mud. Another advantage of front driving is that with it there is much less tendency to skid than with rear driving. The problem of driving through the steering wheels can, of course, be solved, but it involves the use of two universal joints, preferably of a type which insures uniform transmission of motion irrespective of the angle between the connected shafts, which must be so placed that the point of intersection of the two connected shafts lies in the centre line of the steering knuckle pin.

Four Wheel Drive—Driving on all four wheels has been employed to some extent, particularly on army wagons, which may under conditions have to travel off the roads. Four wheel driving makes the whole weight of the vehicle and load available for traction purposes, which is an advantage when the streets are covered with ice or snow, or for some other reason are exceedingly slippery. This system of driving would become more important if steel tires should ever come into common use for commercial vehicles, since the adherence between steel and the different road surfaces is very much less than that between rubber and these road surfaces. Where rubber tires are used sufficient traction is obtained under all normal conditions by so arranging the design that from one-half to two-thirds of the weight of the car and load is always carried on the driving wheels, while under abnormal conditions such traction devices as tire chains or steel studded tire covers are resorted to.

Thus, while the front drive and four wheel drive are being exploited to some extent, at least 99 per cent. of all automobiles built are steered by their front wheels and driven by their rear wheels.

Differential Gear—If both driving wheels were positively connected to the single source of motive power, they could not rotate at unequal speeds, as is required in turning corners. If the wheels had to drive the car forward only, the problem could be solved by driving them through ratchet clutches, but since they must drive the car backward as well as forward, it is necessary to incorporate a so-called differential gear in the drive through which the driving torque is always equally divided between the two driving wheels, in driving both for-

ward and backward, and which allows the two wheels to turn at different speeds as required by the course followed, or by any slight difference in their diameters. With the four wheel drive it is necessary to use three differential gears, one between the front and rear axles and one between the two wheels on each axle.

Friction Clutch—Owing to the fact that the gasoline motor, unlike steam and electric motors, does not start from a standstill with full torque, but must be started either by means of a hand crank or some starting device which generally produces only sufficient torque to just turn the motor over against the compression, it is necessary to disconnect the motor from the driving parts of the vehicle for starting it, and after the motor has attained speed, to connect it to the vehicle again. For this purpose a device must be used which will allow of a certain amount of slippage, until the motor speed has been reduced and the vehicle speed increased to such a point that the two correspond. This is accomplished by means of a friction clutch, which is always placed close to the engine and generally built together with the flywheel—except in those cars provided with frictional means of power transmission, such as belts, friction pulleys and friction discs, which latter devices serve the dual purpose of changing the gear ratio between the engine crankshaft and the road wheels and of disconnecting the former from the latter.

Change Speed Gear—With any but the very lightest of gasoline motor vehicles it is necessary to provide means for connecting the motor to the driving wheels in several different ratios. The gasoline motor differs from other light motors in that when running at its speed of maximum economy or its speed of maximum output, it produces nearly the maximum torque of which it is capable. The motor, of course, must be so geared that under normal conditions of operation—that is, when the car is traveling over a level road at a good speed—it runs at about its speed of maximum economy, and it is then impossible for the motor to provide the propelling effort required in climbing steep hills or in passing through deep sand, through the same gear reduction. It is, of course, understood that when two shafts or other rotating machine parts are connected together in driving relation, the torques of the two bear to each other the inverse ratio of their respective speeds. Thus, by providing a hill climbing gear giving a speed reduction, say, four times as great as the normal speed reduction, the

driving effort at the road wheel rims can be quadrupled for hill climbing. But since the hill climbing or low gear gives a comparatively low vehicle speed, it is customary in all but the lightest vehicles to provide either one or two intermediate gears, for use on moderate hills, on soft or uneven roads, etc. The change gear mechanism, therefore, provides either three or four forward gear ratios as a general thing, and also one reverse gear ratio. In this country gear boxes with three forward speeds are considerably more common, while in Europe the four speed gear is the most popular, the difference being no doubt due to the fact that we employ relatively more powerful motors.

Single and Double Reduction—There is now a tendency to use a stroke of about 5 inches in motors of all sizes. Pleasure car motors make about 1800 revolutions at normal speed or at their speed of maximum output. For pleasure cars it is customary to use wheels of 30 to 36 inches diameter. If we assume that the wheels are 36 inches in diameter and that the car is to be geared to make 45 miles per hour at normal engine speed, then the wheels must turn at

$$\frac{45 \times 5{,}280 \times 12}{60 \times 36 \times 3.14} = 420 \text{ } r.\ p.\ m.$$

and the gear reduction ratio from the engine to the road wheels must be 1800 to 420, or about 4.25 to 1. This ratio can easily be obtained by means of a single reduction gear of the helical bevel type.

Now let us take the case of a heavy truck which has wheels of, say, 40 inches diameter and is to be geared to make 15 miles per hour at 1,200 revolutions per minute of the motor. The driving wheels must then turn at

$$\frac{15 \times 5{,}280 \times 12}{60 \times 40 \times 3.14} = 140 \text{ } r.\ p.\ m.$$

Hence the gear reduction ratio must be 1,200 to 140, or 8.5 to 1. This cannot be obtained in a practical way by a single bevel or spur gear set or a chain and sprocket gear, for the reason that the outside diameter of the driven gear or sprocket on the rear wheels or axle is limited, since the car must clear the road by a certain amount. This reduction can be obtained by means of a worm and worm wheel, but if either a bevel gear or chain drive is used, a double reduction is necessary. It is customary in such cases to employ a first reduction by bevel gears to a jackshaft and a second reduction by chain to the rear wheels, although occasionally the two reductions are obtained

by means of one spur gear set and one bevel gear set, both contained in a housing on the rear axle. All pleasure cars employ a single reduction for normal speed operation, obtained by either a set of bevel gears, a chain and sprocket wheels or a worm and worm wheel. Commercial vehicles of the lighter type with pneumatic tires are geared the same, while the heavier commercial vehicles have either a single worm gear reduction or a double reduction by bevel gears and chains, by bevel gears and spur gears, or by bevel gears and internal gears.

Dead and Live Axles—The driving wheels may either be mounted upon bearings on the rear axle and driven through chains or spur gears, in which case the axle is called a dead axle, or they may be fixed upon the ends of driving shafts extending through the rear axle housing, or be placed in driving connection with such shafts through driving dogs or positive clutches, in which case the axle is a live axle. Dead axles are used on a good many heavy commercial cars and live axles on nearly all pleasure cars. When a dead axle is used the rear wheels are driven from a countershaft—except in the very few cases where two motors are used—and the differential gear is mounted on the countershaft. With live axles it is customary to mount the differential gear at or near the middle of the axle, though sometimes it is mounted on the propeller shaft through which the power is transmitted to the driving axle. Live axles may be driven through a chain and sprockets or through bevel, worm or spur gears. Only a single driving connection is required in the case of a live axle, while in the case of a dead axle there must be provided an individual drive to each of the driving wheels. Though the chain drive is applicable to live axles, and was at one time extensively used on low priced pleasure cars, it is now, as a rule, used only in connection with dead axles, in the form of the so-called side chains. Nearly all live axles of pleasure cars are driven through a set of bevel gears.

Frames—One of the rules which have been established in automobile design is that the vehicle body should be as independent as possible of the mechanical part, so that it can be removed without disturbing any of the mechanical parts. The motor, transmission and control members are, therefore, carried upon a substantially rectangular frame made of pressed steel, rolled steel or laminated wood, which is supported upon the axles through the so-called body springs. The motor sets upon this frame in front; in the conventional type of pleasure car chassis the motor space is walled in by the radiator in front

and the dashboard at the rear, and the motor is covered by a sheet metal bonnet. This same arrangement is also used to some extent in heavy commercial vehicles, but for this class of vehicles there are two alternate arrangements, viz., having the driver's seat on top of the motor or at the side of the motor. In fact, there may be said to be still one more alternative, since the motor may be under the seat proper or under the footboard of the driver's seat. These latter arrangements make that portion of the length of the frame which would otherwise be occupied by the driver's seat available for loading space.

In the conventional type of vehicle the space on the frame back of the dashboard is occupied by the body. It is one of the rules of design that no part of the mechanism back of the dashboard, except the control members, should project above the top plane of the frame. Formerly half elliptic springs were used almost exclusively and were often placed directly underneath the frame side members, whose top edge was then made straight from end to end. Now, however, three-quarter elliptic and even full elliptic springs are widely used at the rear on pleasure cars, and in order to preserve a comparatively low centre of gravity, the frame has a drop directly in front of the point of attachment of the rear springs, or the springs, even if semi-elliptic, are placed outside the frame and there is a so-called "kick-up" in the frame directly over the rear axle, so it will not strike the latter when the springs are fully compressed. The frame side members are generally swept in at the front end in order to allow of a greater limiting deflection of the steering wheels.

The so-called reach or perch has been entirely done away with. The rear axle transmits its driving thrust to the frame either through radius rods or the rear springs and the frame transmits driving thrust to the front axle through the springs.

Tread and Wheel Base—The distance between the centre lines of ground contact of the wheels on opposite sides is known as the track or tread. This distance is generally 56 inches in pleasure cars and the lighter commercial vehicles, and 62 inches or more in heavy trucks. The National Automobile Chamber of Commerce has adopted a standard of 56 inches for the tread of pleasure cars, but there is no standard for truck treads. Practically all light horse vehicles used in the northern part of the country have a track of 56½ inches, which is measured from and to the outside of the tires at the point of contact with the road, so an automobile with the standard 56 inch tread will run in ruts made by the wheels of horse vehicles. In the South a tread of 60 inches is much used on horse vehicles,

and since many of the roads there are deeply rutted a large part of the year, several automobile manufacturers have been furnishing their cars with a 60 inch tread to customers in that part of the country, but the practice has been discontinued.

The distance between the centre of road contact of the front and rear wheels, respectively, is known as the wheelbase. This, of course, is the same as the centre distance between the axes of the front and rear wheel spindles. The wheelbase differs widely in different types and sizes of machines. A long wheelbase makes for a more comfortable riding car and also tends to prevent skidding. On the other hand, a long car cannot be handled so well in crowded streets, since it cannot turn in such a short radius. Besides, a long wheelbase car is necessarily comparatively heavy, since the frame must be made of larger cross section in order to support the same weight, as well as be made longer. In passenger vehicle practice there is a fair degree of uniformity with respect to wheelbases, the latter ranging between the following limits for different types of cars.

Four cylinder runabouts and roadsters, 30 horse power and under, 90-105 inches.

Four cylinder runabouts and roadsters over 30 and not over 40 horse power, 105-115 inches.

Four cylinder taxicabs, 4-5 passengers, 96-100 inches.

Four cylinder touring cars, 30 horse power and under, 100-115 inches.

Four cylinder touring cars over 30 and not over 40 horse power, 110-120 inches.

Four cylinder touring cars over 40 horse power, 120-130 inches.

Six cylinder cars, about 10 inches longer than four cylinder ones of the same class.

CHAPTER II.

FRICTION CLUTCHES.

The friction clutch, as already pointed out, serves the purpose of connecting the motor, after it has been started running, with the driving gear of the car, in such a way that the car may be gradually accelerated and the motor at the same time pulled down in speed, until the speeds of the two correspond, thus preventing shock and jar.

In motor cars employing a single friction clutch which serves to connect the engine to the driving wheels through all of the different gear reductions, the clutch is normally held in engagement by a spring or springs, and when it is desired to disconnect the engine in order to stop the car, or to change the gear, the clutch is first disengaged by compressing its spring by means of a pedal, then the gear is disengaged or changed, and finally the clutch is let in again. In other cars, where a clutch serves for a single gear reduction only, it is normally disengaged, and is engaged by pressure exerted on a hand or foot lever, the mechanism transmitting the pressure to the frictional surface of the clutch being self locking in the engaged position.

There are quite a number of different types of clutches, all more or less extensively used, viz.:

Conical clutches.
Multiple disc clutches.
Dry plate clutches.
Band clutches.
Coil clutches.
Expanding segment clutches.

Multiple disc and dry plate clutches are identical as far as their general principle is concerned, but they differ in respect to detail of design. Dry plate clutches are in very extensive use on American cars, as are conical clutches. The latter are particularly suited to cars of relatively low power. Lubricated disc clutches also are quite popular, especially in Europe. The other three types mentioned have been used more or less

in the past, but are now seldom met with, the practice of assembling cars from parts built by specialists having tended toward the standardization of types. The different types of clutches will be taken up in succession.

Cone Clutch—Conical clutches may again be divided into three sub-classes, viz., the direct cone, the inverted cone and the double cone clutch. The direct cone is the oldest and most popular of these types. As shown in Fig. 1, with this type the flywheel is bored out to form the female cone, into which the male cone is forced by the pressure of a coiled spring concentric

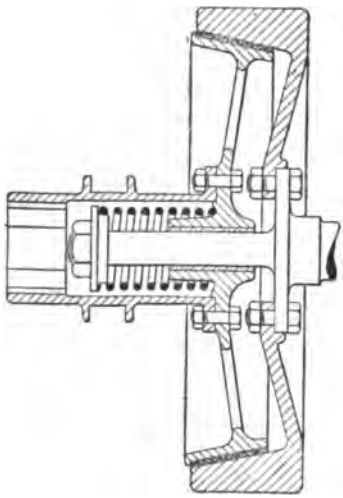

FIG. 1.—DIAGRAM OF DIRECT CONE CLUTCH.

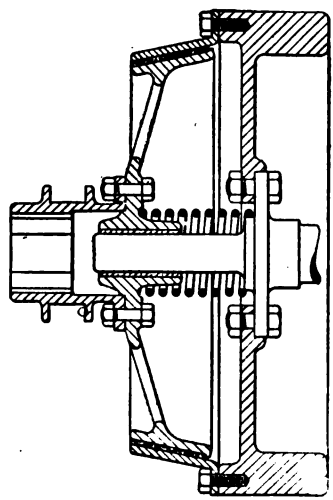

FIG. 2.—DIAGRAM OF INVERTED CONE CLUTCH.

with its hub. In the inverted cone clutch (Fig. 2) the female cone is formed by a cast iron or steel ring bolted to the rim of the flywheel, into which the male cone enters from the flywheel or engine end. The inverted type of cone clutch was originally adopted in order to make it possible to place the change gear box nearer the engine, under the floor boards of the driver's seat, since the clutch spring is placed between the flywheel and the clutch cone, instead of to the rear of the latter. The double cone clutch is a combination of a direct and an inverted cone clutch, and is particularly suited where great powers have to be transmitted.

Clutch Calculations—In calculating any part of the transmission we will assume that the mean effective pressure in the engine cylinder multiplied by the mechanical efficiency ($\eta\ p$) is 80 pounds per square inch at low engine speeds and 65 pounds per square inch at the speed of maximum output. These figures are fairly representative though a little low for some engines. Now let

b = bore of cylinder in inches.
l = length of stroke in inches.
n = number of cylinders.
p = mean effective pressure.
P = mean total pressure on one piston.
T = torque in pounds-feet.

Then the energy developed during one revolution of the crankshaft is

$$E = \frac{n}{2}\frac{\pi}{4} b^2 p \frac{l}{12} \text{ foot-pounds.}$$

If there is a torque T on the engine shaft, or a turning effort of T pounds at a radius of 1 foot, the energy transmitted during one revolution is

$$E = 2\pi T \text{ foot pounds.}$$

Hence

$$2\pi T = \frac{n}{2}\frac{\pi}{4}\frac{l}{12} b^2 p$$

and

$$T = \frac{n l b^2 p}{192} \text{ pounds-feet} \quad \ldots\ldots (1)$$

A diagram of a cone clutch is shown in Fig. 3. The spring pressure P forces the male cone against the female cone, producing a normal pressure N at their contact surface. According to the principle of the parallelogram of forces

$$\frac{P}{N} = \sin \alpha,$$

hence

$$P = N \sin \alpha \quad \ldots\ldots (2)$$

where α is the angle of the clutch cone. The adherence or frictional force F between the clutch cones is equal to the normal pressure multiplied by the coefficient of friction f

$$F = N f$$

Angle of Cone—Cone clutches faced with leather or asbestos fabric are given an angle of cone of from 10 to 13 degrees, but the most common angles are 12 and 12½ degrees. With metal to metal clutches an angle of 10 degrees can be used without risk of trouble, but such a small angle in a leather

faced clutch is liable to cause it to stick. From equation (2) it will be seen that the spring pressure P required to produce a certain normal pressure decreases as the angle of the cone decreases, hence there is an advantage in using as small an angle as practical. However, a cone with a relatively large angle is less given to "fierceness" in action, i. e., sudden gripping.

Coefficients of Friction—The coefficient of friction between leather and cast iron varies greatly according to the condition of the cast iron surface and the state of lubrication. James Angelino in experiments made with a piece of old clutch leather found the coefficient of friction to vary from $f=0.15$ to $f=0.35$.

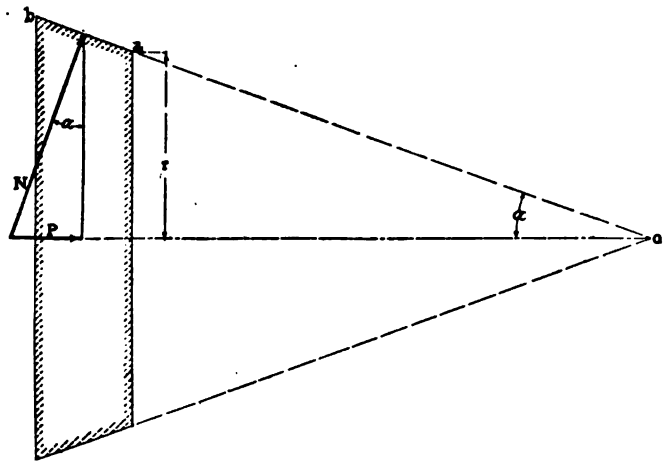

FIG. 3.—COMPOSITION OF CONE CLUTCH FORCES.

Kent gives the coefficient of leather on greasy metals as 0.23 In the calculations it, therefore, is the best plan to figure on a coefficient of friction of 0.2, since the leather is generally boiled in tallow or soaked in castor oil prior to being applied to the clutch, and hence is always somewhat greasy. Cast iron on cast iron cone clutches, lubricated, have been used to some extent, and in their case the friction coefficient is comparatively low, not exceeding 0.07, depending upon the nature of the lubricant. Asbestos fabric is also used to some extent as a facing for clutch cones. It possesses the advantage that it is not affected by high temperatures. The coefficient of friction is also somewhat greater than that of leather.

Diameter of Cone—It is desirable to make the diameter of the cone small, for the following reason: The sliding gears or jaw clutches of the change gear practically never run at equal peripheral speeds just previous to being meshed, but from the moment they become meshed they must run at the same speed. This means that at the moment of engagement one of the connected parts must suddenly change its speed, and this results in a clash or hammer blow at the point of engagement. Now, one of these parts is mechanically or positively connected to the driving wheels of the car, and therefore cannot quickly change its speed. The other consists of the clutch cone and of a train of gears, and the resistance to a change in the speed of these parts is proportional to the sum of their polar inertias, of which the inertia of the clutch cone is by far the greatest. The inertia of a revolving body is proportional to its weight, and to the square of its radius of gyration, which latter, in the case of a clutch cone, varies substantially as the mean outside diameter. Hence, the force of the clash increases and decreases substantially as the square of the mean outside diameter or radius of the cone. On the other hand, the radius must be made large enough to keep down the unit normal pressure (which determines the wear of the clutch facing) and the spring pressure required to transmit the torque of the motor, since a clutch with a very stiff spring is "harsh" and difficult to operate. As a general rule, the flywheel would be designed first and the clutch made of a corresponding diameter.

Unit Normal Pressure—In conical clutches lined with leather, asbestos fabric or similar material the unit normal pressure generally ranges around 12 pounds per square inch. However, in some of the largest cone clutches it is nearly 20 pounds per square inch, and yet satisfactory service is obtained. Cone clutches are used mainly for the smaller engines and multiple disc clutches for larger powers, and if the former are used on engines of 60 horse power and over it is necessary to employ large unit pressures, because the available diameter is not much greater than is used in clutches for smaller powers, and unduly wide clutch faces are also out of the question. While the clutches work satisfactorily under the higher pressures, it is natural to expect them to wear out quicker, and wherever the space available permits it is best to keep the unit pressure down to 12 pounds. In metal-to-metal cone clutches the unit normal pressure must be several times that used with leather faced clutches in order to transmit the same power.

The foregoing figures are based upon the normal pressure required to hold the clutch from slipping when fully engaged. The actual normal pressures are somewhat greater because the clutch spring must be made stronger than required to produce this normal pressure under conditions of rest. Suppose that the normal pressure N is just insufficient to produce the necessary driving torque and the clutch slips. The normal pressure can only be increased by forcing the cone further into the flywheel, and this necessitates overcoming the resistance to motion of the leather over the cast iron surface in a direction normal to that of slippage.

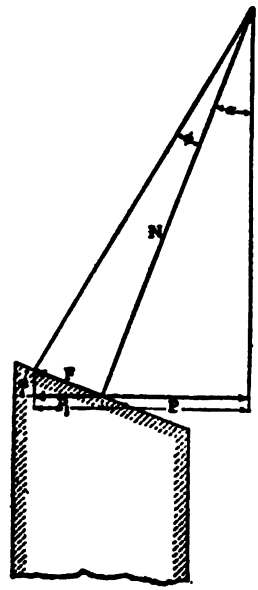

FIG. 4.—COMPOSITION OF CLUTCH FORCES DURING ENGAGEMENT.

Referring to Fig. 4, let N represent the effective normal pressure between the clutch friction surfaces, and P the spring pressure necessary to produce this normal pressure. Let F represent the frictional force in the direction of a generatrix of the cone; P_1, its component parallel to the clutch axis, and ϕ the so-called friction angle ($tan\ \phi = f$), then

$$P = N\ sin\ \alpha,$$
$$F = N\ tan\ \phi$$

and

$$P_1 = F\ cos\ \alpha = N\ tan\ \phi\ cos\ \alpha.$$

The total spring pressure necessary to cause the clutch to engage firmly without slipping is

$$P_2 = P + P_1 = N\ (sin\ \alpha + cos\ \alpha\ tan\ \phi) \quad \ldots\ldots\ldots\ldots\ldots\ldots (3)$$

In applying this equation it is permissible to use for $tan\ \phi$ a considerably smaller value than the normal coefficient of friction between leather and cast iron. This is due to the fact that when one body moves frictionally over another in a given direction, it requires but an insignificant effort to start it moving at right angles to its original direction of motion. That is, the coefficient of friction encountered in any given direction is virtually reduced by motion in a direction at right angles thereto. An illustration of this principle is furnished by the fact that when a

mechanic wants to force a tight fitting collar over a shaft he will twist it angularly back and forth on the shaft, whereby the effort required to move it in an axial direction is greatly reduced. We may assume that the coefficient of friction in this case is one-fourth of its normal value, or 0.05. Hence, the general equation for the spring force required to engage a leather-faced cone clutch becomes

$$P = N\ (\sin \alpha + 0.05 \cos \alpha) \quad \ldots\ldots (4)$$

The frictional force at the mean circumference of the cone is

$$\frac{T \times 12}{r_m} \text{ pounds.}$$

The area of the cone face is

$$2 \pi r_m w,$$

and since there is to be a normal pressure of 12 pounds per square inch, the total normal pressure is

$$12 \times 2 \pi r_m w = 24 \pi r_m w.$$

This multiplied by the friction coefficient 0.2 gives the total frictional force—

$$0.2 \times 24 \pi r_m w = 4.8 \pi r_m w.$$

Equating this to the expression for the frictional force found above, we have

$$\frac{T \times 12}{r_m} = 4.8 \pi r_m w,$$

and

$$w = \frac{T}{0.4 \pi r_m^2} \quad \ldots\ldots (5)$$

from which equation the necessary width of face may be found.

It is also possible to derive an equation for the necessary spring pressure in terms of the fundamental clutch data. The normal pressure

$$N = 12 \times 2 \pi r_m w = 24 \pi r_m w.$$

Substituting the value of w, found above,

$$N = 24 \pi r_m \left(\frac{T}{0.4 \pi r_m^2}\right) = \frac{60\ T}{r_m},$$

and substituting this value of N in equation (4) we have

$$P = \frac{60\ T}{r_m} (\sin \alpha + 0.05 \cos \alpha) \quad \ldots\ldots (6)$$

In order to facilitate the determination of the necessary face width and spring pressure, according to equations (5) and (6), Chart I has been drawn. From this chart can be found the low speed torque of four and six cylinder motors of any cylinder dimensions within the usual range of automobile practice, as well as the necessary width of clutch face and of the clutch

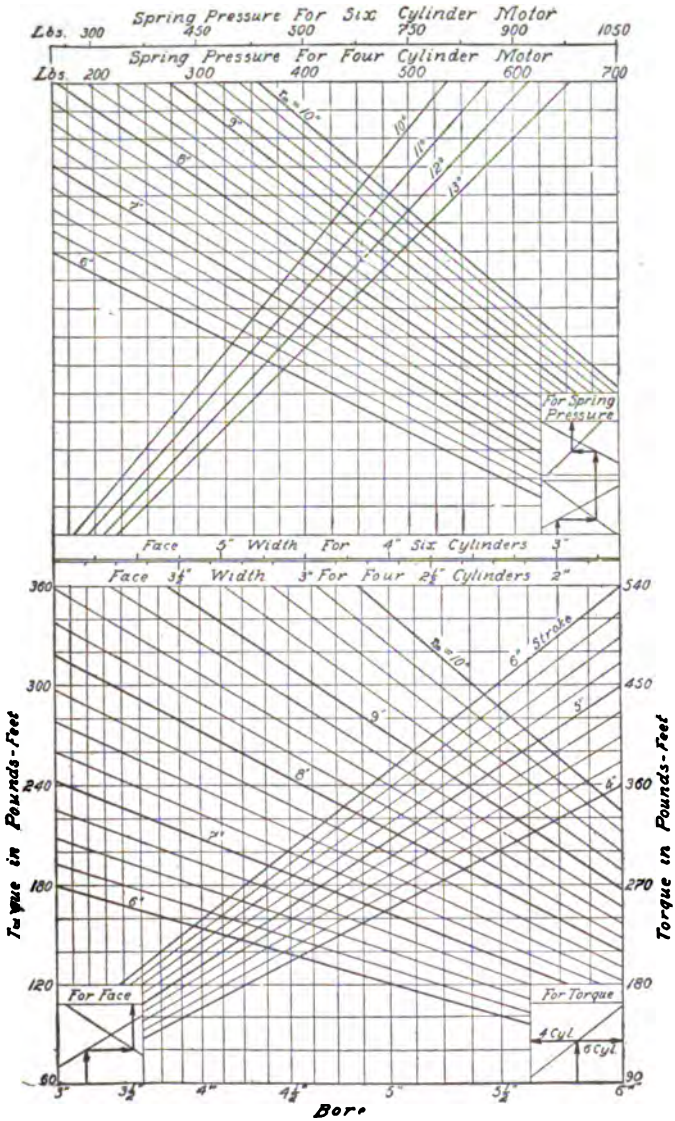

CHART 1.—GIVING LOW SPEED TORQUE OF FOUR AND SIX CYLINDER MOTORS AND WIDTH OF FACE AND SPRING PRESSURE REQUIRED FOR A LEATHER-FACED CONE CLUTCH TO TRANSMIT THIS TORQUE.

spring pressure required with different mean radii of clutch and angles of cone. The method of using the chart is indicated in diagram.

Constructional Details—Since the inertia of the clutch must be as small as possible, the clutch cone is generally cast of aluminum, though of late pressed steel clutches have come into quite extensive use, mainly abroad. In the case of aluminum cones the rim is generally made of a mean thickness of one-quarter inch, tapering from the edges toward the joint with the web, which latter should preferably be at the middle of the rim. In order to obtain the necessary strength in the web with the least amount of material the latter, instead of being made radial, is inclined considerably toward its axis, so the material will work partly under compression. The dimensions of the web or spokes are largely a matter of foundry limitations. For the smaller powers a plain web is used, tapering from about three-sixteenths inch near the rim to one-quarter inch where it joins to the steel centre, which is lightened by large holes being formed in it. Some designers, however, prefer to leave the rim solid, as it keeps out dust. When spokes are used they are often of cross-shaped section or ribbed, so as to provide additional lateral strength in the cone and also to support the rim more rigidly.

Clutch leather is generally treated before being applied to the clutch by being either boiled in tallow or soaked in castor oil, the excess oil or grease being removed by passing the leather through rolls. The leather must be cut to form a sector of an annular ring of an inside radius $o\text{-}a$ and an outside radius $o\text{-}b$ (Fig. 3). The length of the inner edge of the annular sector must evidently be $2\pi r$. Now, the radius

$$o\text{-}a = \frac{r}{\sin a},$$

and the circumference of a circle of radius $o\text{-}a$ therefore is

$$\frac{2\pi r}{\sin a}$$

Hence the angle ϕ to which the leather should be cut can be found from the proportion

$$\frac{2\pi r}{\sin a} : 360 \text{ degrees} = 2\pi r : \phi$$

$$\phi = \sin a \times 360 \text{ degrees}.$$

Therefore, in laying out the pattern of the leather (Fig. 5), strike two concentric circles of radii

$$o\text{-}a = \frac{r}{\sin a} \quad \text{and} \quad o\text{-}b = \frac{r}{\sin a} + w,$$

where w is the width of the face of the clutch. Then from the annular ring thus formed cut out a sector subtending an angle $\sin \alpha \times 360$ degrees at the centre.

Some designers form a small radial flange on the edge of the rim at its bigger end which will retain the facing, and thus take some of the stress off the retaining means and off the facing itself. When leather facing is used it is retained by means of copper rivets whose heads are countersunk beneath the surface of the leather and whose ends on the inside of the clutch rim are hammered over. Usually two rows of one-eighth inch rivets are used, spaced about an inch apart. After the leather is riveted

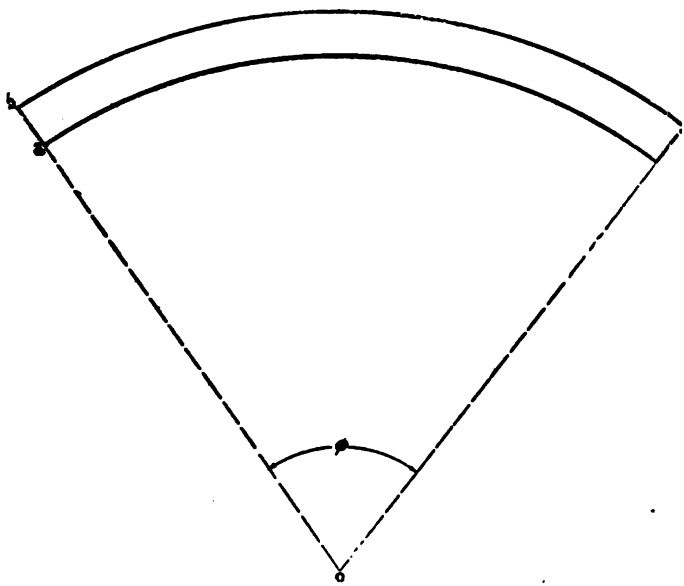

FIG. 5.—PATTERN FOR CLUTCH LEATHER.

to the cone it is accurately turned off in a lathe. An improved method of holding the leather in place consists in the use of six or eight T bolts, and the provision of depressions in the rim of the cone parallel with generatrices of the latter, for the reception of the heads of the T bolts. This method of securing the facing, which is particularly applicable to asbestos fabric, (which does not lend itself well to riveting) is illustrated in Fig. 6.

Provisions for Smooth Engagement—Cone clutches have a tendency to grip with a jerk, especially in case the car is oper-

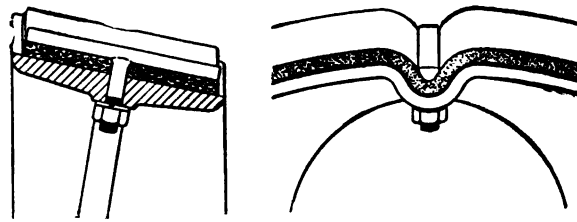

FIG. 6.—CLUTCH LEATHER FASTENED BY T-BOLTS.

ated by a novice driver or the clutch operating linkage is such that the driver must exert a very strong pressure on the clutch pedal. In order to overcome this tendency, which is detrimental to the whole car, various devices are resorted to, all based on the principle that a portion of one of the engaging surfaces is raised by spring force above its normal height, and thus that portion alone first contacts with the opposing surface. The plan most commonly followed consists (Fig. 7) in turning a shallow circumferential groove on the outside of the aluminum cone near its large end, in which are placed a number of equally spaced flat steel springs which are fastened to the cone by one rivet each, or to a screw secured in the rim of the cone. These steel springs are of such form that they slightly lift the leather when the clutch is disengaged, so that certain portions of the leather come in contact with the flywheel rim first. These "auxiliary" springs are fully extended when the clutch surfaces first engage each other, and the pressure of contact therefore starts from nothing.

A similar device, comprising coiled instead of flat springs, is illustrated in Fig. 8. It consists of a small shell cast integral with or riveted to the clutch rim from the inside, which contains a coiled spring and a plunger pressed outward thereby. The head

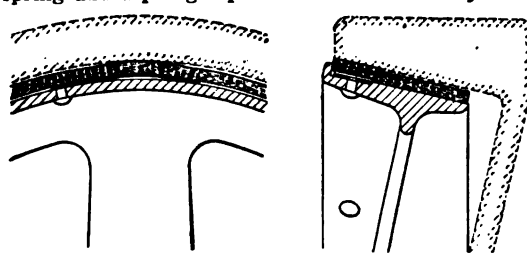

FIG. 7.—FLAT SPRING UNDER CLUTCH FACING.

of the plunger, which presses against the clutch facing from underneath, may be either fillister shaped or in the form of a crossbar extending underneath the leather the entire width of the clutch face.

Where either a male or female cone of steel is used it is possible to cut slits in it lengthwise and circumferentially, as shown in Fig. 9, or at an angle to the edge, and then bend the flaps so formed slightly outward or inward, as the case may be. This practice is or has been followed by Renault, Cadillac, Pullman and others.

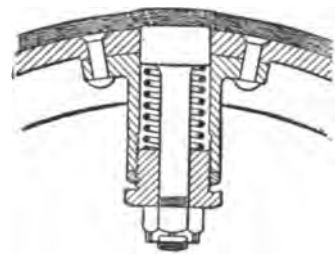

FIG. 8.—SPRING PLUNGER UNDER CLUTCH FACING.

Cork inserts are used with leather-faced cone cluches by a number of manufacturers, mainly with the object of making the engagement more gradual. The properties of these corks will be discussed in connection with plate clutches, in which they are more extensively used. Corks used in leather-faced cone clutches vary in diameter from five-eighths to one inch and cover from 5 to 30 per cent. of the surface of the cone. When the area presented by the corks does not exceed 10 per cent. of the total frictional area, they do not materially affect the coefficient of friction, but some advantage is gained in this respect when from 20 to 30 per cent. of the surface is made up by the corks. The friction is then somewhat greater than that between leather and cast iron, and consequently the spring pressure can be reduced.

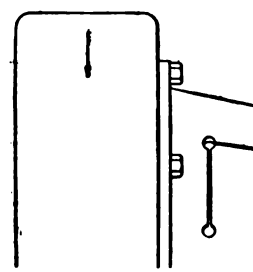

FIG. 9.—SLOTTED CLUTCH FEMALE CONE.

Multiple Springs—A few makers use three clutch springs placed at equal angular distances and about midway between the clutch shaft and the rim. One advantage of this arrangement is that the clutch is more easily adjusted, owing to the greater accessibility of the adjusting means. A typical design of this kind is shown in Fig. 10. A three armed spider is placed on the tailshaft just behind the web of the flywheel, whose arms carry studs or spring bolts extending backward parallel with

the tail shaft, through holes in the web of the clutch cone. The portions of the three spring bolts extending through the clutch cone are surrounded by coiled springs, whose rearward ends bear against washers supported by adjusting nuts. The spring thrust is taken up on a ball thrust bearing carried on the tail shaft. Constructions similar to the one here shown are used by several English manufacturers.

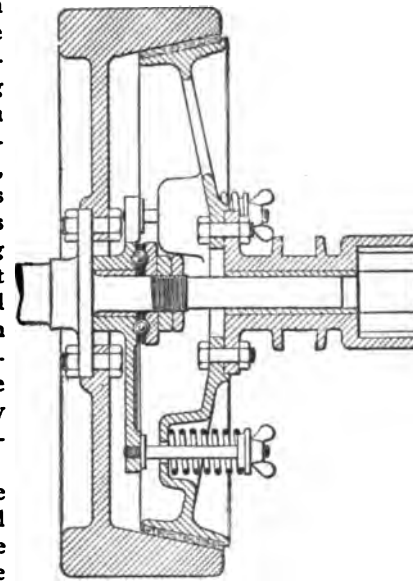

FIG. 10.—MULTIPLE SPRING CLUTCH.

Clutch Centre—The clutch may be regarded as composed of three main parts, viz., the cone with its web or spokes, the supporting bearing, and a spring housing or hollow shaft by which the power is transmitted to the change gear. Generally these three parts are made separate, though sometimes the cone is formed integral with the bearing. The clutch bearing is operating only when the clutch is disengaged, and evidently carries very little load. It therefore may be of relatively small diameter and free fitting. The bearing is practically always a plain one, and generally the non-fluid oil in the clutch spring housing is depended upon for its lubrication, it being drilled with several large oil holes and cut with deep oil grooves, but some makers in addition provide a pressure grease cup on the outside of the clutch which can be screwed down at intervals, the grease being forced through a drill hole directly to the bearing surface.

The clutch spring generally surrounds the bearing, its forward end resting against a flange thereon and its rear end against a ball thrust bearing on the end of the tailshaft or on a cap screw screwed into the end of that shaft. This thrust bearing works only when the clutch is disengaged, whereas when it is engaged both ends of the spring press against parts rotating in unison and incapable of moving further apart. In other words, the

spring pressure is then self-contained. This is contrary to conditions in the earlier cone clutches, in which the clutch spring took purchase on a shoulder on the transmission shaft, thus creating end thrust in both the transmission shaft and the crankshaft.

It is quite desirable to keep down the length of the tailshaft, so the change gear box may be located underneath the floor boards of the driver's seat, and enough space should be allowed between the rear end of the tailshaft and the forward end of the transmission driving shaft, so the clutch can be removed from the car without removing either the engine or the gear box. If the web of the clutch cone is inclined backward, for the purpose of increasing its strength, the flange for connecting it to the clutch centre usually comes at a considerable distance from the flywheel flange, and it is therefore advantageous to make the bearing of a form similar to a cake mold, as shown in Fig. 11, so its forward end will come within a short distance of the flywheel. making allowance only for the wear of the clutch leather.

In designing the clutch centre, attention must be paid to the exigencies of assembling. The clutch spring housing covers the spring and extends beyond the end of the tail shaft, hence the spring must be put in place and adjusted before the housing is put in place. Some makers bolt the web of the cone and the flange of the bearing together by, say, three bolts, and pass three intermediate bolts through the web of the cone and the flanges of both the bearing and the clutch housing. This admits of assembling the cone with the bearing, then placing them on the engine tail shaft, putting the clutch spring and its retaining nut in place, and finally bolting the clutch spring housing to the cone and bearing. Others place the web of the cone between the flange of the bearing and the flange of the clutch spring housing, and pass all of the retaining bolts through all three connected parts. This makes it necessary to assemble these parts after the clutch spring is in place, which, of course, can be done only with a spoked cone. Still other makers connect the clutch housing with the clutch bearing by means of radial bolts or set screws.

Spring Thrust Bearing—When the clutch is disengaged and at rest its spring bears with one end against a rotating part (tailshaft spring rest) and with its other against a stationary part, and to prevent undue wear and friction under these conditions the spring usually exerts its pressure through a ball thrust bearing at the rear end. In fact, if no ball thrust bearing were provided, the friction between the spring and its support would

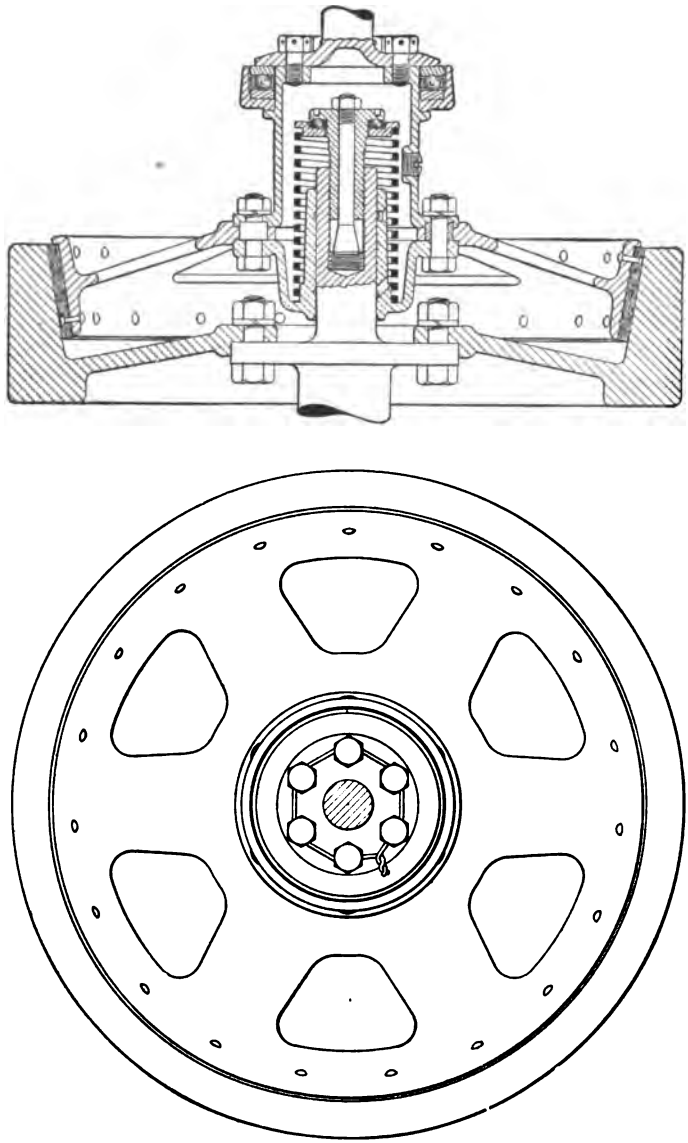

FIG. 11.—TYPICAL CONE CLUTCH DESIGN.

likely be great enough to cause the clutch cone to keep on spinning. The ball thrust bearing may be passed over the end of the tailshaft and held in place by means of a castellated nut, or this bearing may be supported by means of a cap screw screwed into the end of the tail shaft. With either arrangement the spring pressure may be adjusted; with the latter it can be adjusted through a considerable range, and, besides, the tail shaft will be shorter, so the change gear can be brought closer to the engine. In any case it is necessary to provide a lock for the adjustment, and with a cap screw carrying the ball thrust bearing this lock usually assumes the form depicted in Fig. 11. The cap screw is drilled through its centre and slightly tapered out and split at its outwardly threaded end, to receive a small screw, with a correspondingly tapered head. By means of this inner screw and its nut the split end of the cap screw can be expanded and the screw thus securely locked in place.

Clutch Springs—The springs which hold the clutch in engagement are generally helical or coiled springs made of either round or square steel wire. Formulæ for the safe load and the deflection of round steel wire coiled springs were given in Vol. I in the chapter on Valves and Valve Gear. The corresponding formulæ for square steel wire springs are

$$W = 0.471 \frac{S d^3}{D} \quad \ldots\ldots (7)$$

$$F = 4.712 \frac{n P D^3}{E d^4} \quad \ldots\ldots (8)$$

D = mean diameter of coil.
W = maximum safe load in pounds.
F = compression of spring.
d = side of cross section of wire.
n = number of coils in spring.
S = maximum safe fibre stress of material.
E = torsional modulus of elasticity.
P = load in pounds.

Occasionally, in order to save space in a longitudinal direction, so-called volute springs, made of flat metal, as shown in Fig. 12, are used.

Pressed Steel Cones—Pressed steel cones are very attractive to the designer, owing to their light weight and their low cost when made in large numbers. Some trouble is said to have been encountered with these cones owing to insufficient rigidity and consequent shattering, and it has been recommended to press the cone with radial ribs to overcome this difficulty. One English

manufacturer makes the web of his pressed steel cone in the form of a zone of a sphere, evidently with the same object. Either ⅛ inch or 3/16 inch stock is used. A recent development in the line of clutches is a pressed steel clutch with a leather facing secured to the driving cone. This should reduce the moment of inertia of the driven cone in such a degree as to eliminate all objection to the cone clutch on this score.

The several designs of clutches here shown are particularly simple. A great deal of ingenuity has been applied by designers in working out the details of clutch centres, and much variety is to be found in the designs extant. With cone clutches of the inverted type it is not easy to provide adjusting means for the clutch spring, and none is generally provided.

Shifting Collar—To disengage a cone clutch the driven cone must be withdrawn from the driving cone against the pressure of the clutch spring. This necessitates a sliding connection between the clutch pedal shaft, which usually extends across the vehicle frame directly above the clutch housing, and this housing. The latter is usually provided with a circumferential groove, in which is located a sliding collar. If both flanges of the groove are integral with the housing, the shifting collar, of course, has to be made in halves in order to get it into the groove, the halves being bolted together. However, generally only one flange of the groove is integral, so the shifting collar can be slipped over the housing from one end.

When the clutch is withdrawn the entire pressure of the clutch spring is taken up on one face of the shifting collar, and to obviate the necessity of constant attention to the lubrication of this collar a ball thrust bearing is generally placed in the groove to one side of the shifting collar, so as to take the thrust of the spring. This, of course, necessitates the use of one removable flange, in order to get the ball thrust bearing into place.

A typical shifting collar design is shown in Fig. 14. The collar itself is made of brass and provided with two radial pins, with which engage the free ends of the forked clutch shifting lever. These lever ends are formed with oblong holes for the pins to pass through, to make allowance for the fact that they move in an arc of a circle, while the shifting collar is constrained to move in a straight line. A grease cup is usually screwed into either one or both of the shifting collar trunnions.

In some cases the shifting collar is made in the form of a circular disc, and the forked shifting lever is made cam-shaped and bears against one face of the disc. Pressure has to be transmitted

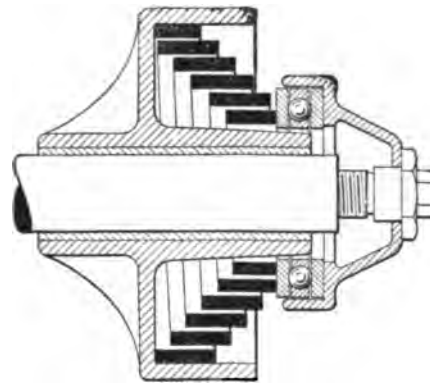

FIG. 12.—VOLUTE CLUTCH SPRING.

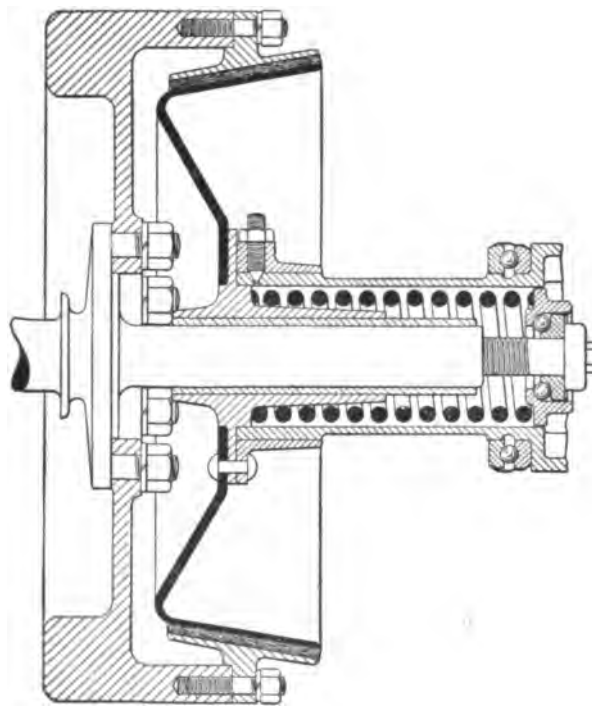

FIG. 13.—PRESSED STEEL CONE CLUTCH.

from the clutch pedal to the clutch housing in one direction only, and if the clutch shifter fork is held against the shifting collar by means of a spring no groove for the collar is necessary.

Clutch Brakes—By lightening the cone, and especially by reducing its diameter, it has been endeavored to reduce the shocks due to clashing of the gears, but there have also been efforts in other directions to insure the possibility of smooth meshing. The clashing, of course, is due to unequal pitch velocities of the two

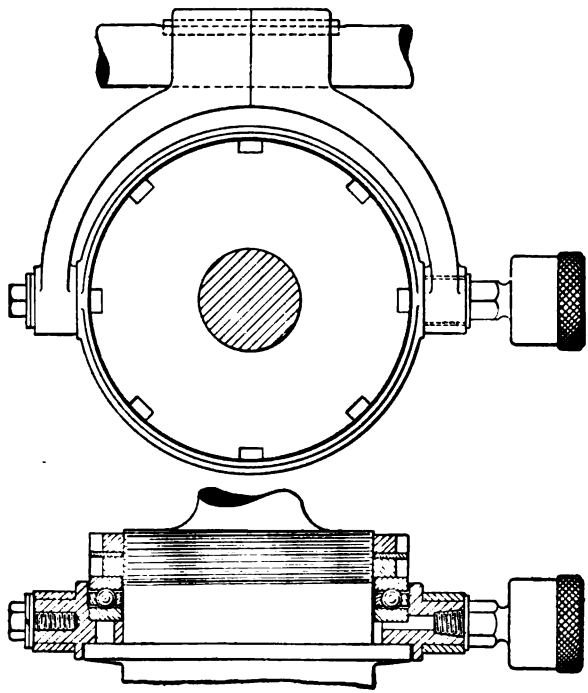

FIG. 14.—CLUTCH SHIFTING COLLAR.

gears meshed. If the speed of one of the gears can be increased or reduced previous to meshing until it corresponds to that of the other, then the gears can be meshed without shock or jar.

Suppose that a car is ascending a hill and it becomes necessary to change to a lower gear. It is evident that if the second gear, say, is disengaged, and an attempt is made to immediately engage the first gear, the driven wheel of the latter will run too fast or the driving pinion too slow to permit of easy meshing. The

driver has no control over the driven gears, except through the use of the car brake, and it would be inadvisable to apply that while ascending a hill. However, as the car is on an up-grade, its speed and that of the driven gear decrease rapidly when the motor is disconnected, and the gears can be readily meshed after a short interval of time. In changing down on the level the driver speeds up the pinion of the first gear by allowing the clutch to partially engage momentarily. If the driver is skilled in handling the clutch and gears, he will be able to shift the gears when the two to be engaged are running at about the same pitch line velocity.

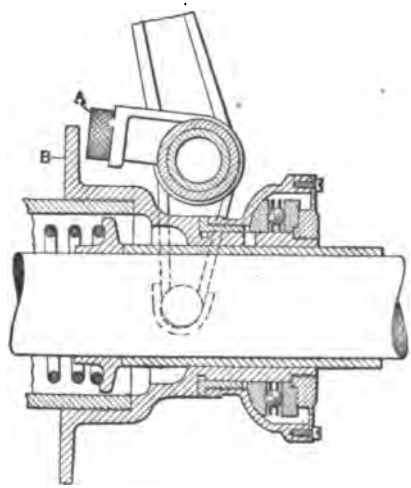

FIG. 15.—CLUTCH BRAKE.

Thus in changing down the gears automatically approach the condition of equal pitch line velocity, or the condition of easy mesh. Not so in changing up. The driven gear of the pair to be meshed is now running too slowly and the driving gear too fast. The latter can only be reduced to the proper speed by applying a brake to the clutch. Many of the larger cars are now equipped with such clutch brakes, which act automatically when the driver completely pulls out the clutch. One design of such a brake is shown in Fig. 15. The clutch housing is formed with a flange *B*, against which bears a fibre block *A*, carried on an arm on the clutch pedal shaft, when the clutch pedal is fully depressed. Another type of clutch brake is illustrated in Fig. 16. This is a

clutch of the plate type, and the power is transmitted from the clutch shaft through a pinion and an internal gear, which latter is formed integral with a shaft coupling made in halves. This coupling is provided with an annular friction ring *B*, which when the clutch is fully withdrawn presses against a corresponding disc *A*, secured to the clutch shifting ring, which latter, of course, does not rotate.

There is quite a variety of designs of clutch brakes, the underlying principle of all of them being that a part rotating with the clutch is brought into contact with a non-rotary part when the clutch pedal is fully depressed, and the friction engendered between the two parts causes the speed of the clutch to be reduced.

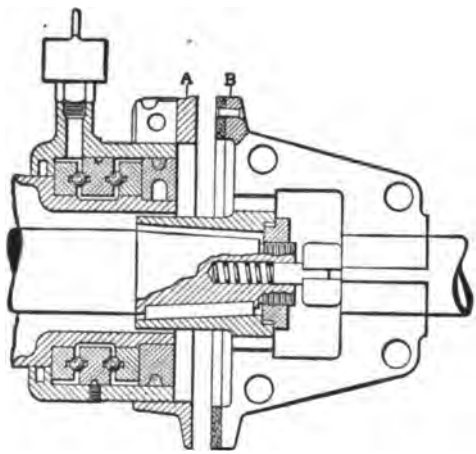

FIG. 16.—DISC CLUTCH BRAKE.

Multiple Disc Clutches—Disc and plate clutches are based on the same principle, but constitute in a sense opposite extremes in design. A disc clutch consists of two sets of annular discs, one set of driving discs and one set of driven discs. These are placed together in alternate order, each driving disc being located between two driven discs. As generally used on automobiles, the driving discs are provided with key slots on their outer circumference into which fit keys on the inside of a drum shaped housing secured to the flywheel, and the driven discs are provided with lugs or key slots on their inner circumference, which place them in driving connection with a drum secured upon the driven shaft. Generally there is one more driving disc than there are

driven discs, so that the two end discs are of the same kind. The drum carrying the driven discs has a radial flange at one end which forms a stop for the discs in respect to axial motion, and against the disc at the other end presses a compressing spider or presser, against which the clutch spring exerts its pressure.

Types of Disc Clutches—Multiple disc clutches operating in oil are of three different types of design, the differences depending upon the manner in which the pressure of the clutch spring is transmitted to the flange or back stop of the discs on the clutch drum. Some of these clutches employ three clutch springs, the

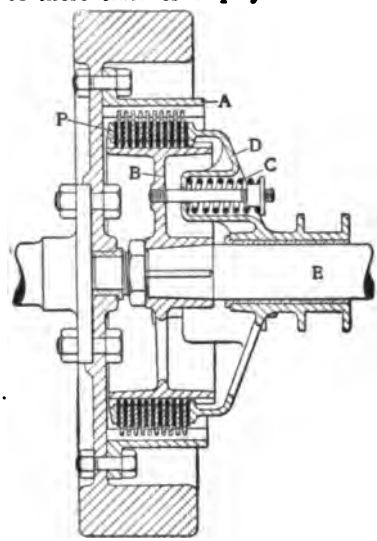

FIG. 17.—MULTIPLE SPRING TYPE OF DISC CLUTCH.

same as some cone clutches, and a design of this type is shown in the sketch Fig. 17. An outer drum *A* is secured to the flywheel and is provided with a number of equally spaced keys on its inner circumference. With these keys engage the driving discs, which are shown sectioned. Between adjacent driving discs are located the driven discs, shown in black. The latter are carried on the inner drum *B*, which is provided with keyways for the lugs formed on the inner circumference of the driven discs. From the web of the clutch drum *B* extend three lateral spring bolts which carry the clutch springs *C* pressing against the disc compressing spider *D*. Drum *B* is keyed to clutch shaft *E*, which is connected with the driving shaft of the change gear, and the

disc compressing spider *D* is provided with a hub surrounding shaft *E* and a groove for the clutch releasing collar, or merely a flange.

A multiple disc clutch with a single clutch spring surrounding the clutch shaft is illustrated in Fig. 18. The arrangement of the outer drum, driving and driven discs and inner drum is the same as in Fig. 17. In this case one end of the clutch spring bears against an inward flange on the hub of the disc compressing spider *D*, and the other against a collar on the clutch shaft *E*. The latter has the inner drum *B* securely keyed to it and held against endwise motion by a nut. Hence, the pressure of

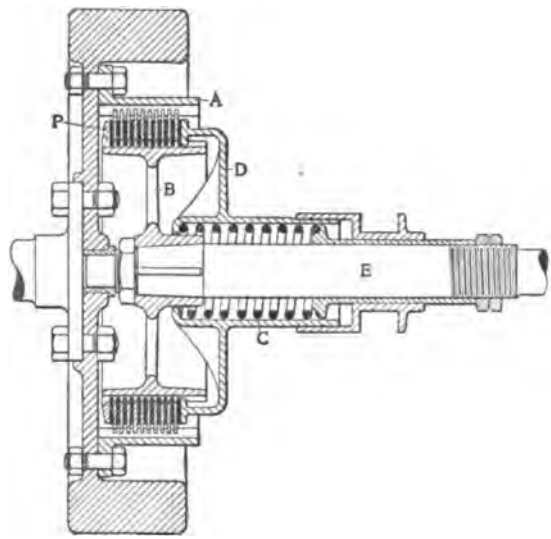

FIG. 18.—SPRING PRESSURE TRANSMITTED THROUGH SHAFT.

the clutch spring is transmitted to the forward end plate or stop *P* of the discs through the clutch shaft *E* and the clutch drum *B*.

In Fig. 19 is shown a design of multiple disc clutch in which the spring pressure is transmitted to the stop *P* of the discs through the clutch housing *A*. The most forward disc bears against a stop ring *P* secured to the flywheel and against the rearmost disc presses the compression plate *D* in the usual way. This disc or spider *D* is acted upon by the coil spring *C* which rests against the flange of the casing *A*. Figs. 17, 18 and 19 are sketches only, not showing all of the necessary details of these clutches.

The spring forces the separate discs together and causes the

driven discs to rotate in unison with the driving discs, provided the resistance to the motion of the driven discs is not greater than the adherence between the driving and driven discs. It will readily be seen that the pressure betwen any two discs is equal to the pressure of the spring, and the adherence or resistance to slipping at any contact surface is equal to the product of the spring pressure by the coefficient of friction. But if there is slippage on one contact surface there must be slippage on all of them, and since the pressure on any contact surface is the same as on any other, the total resistance to slippage is equal to the product of the resistance to slippage at one surface by the number of contact surfaces, which latter is equal to one less than

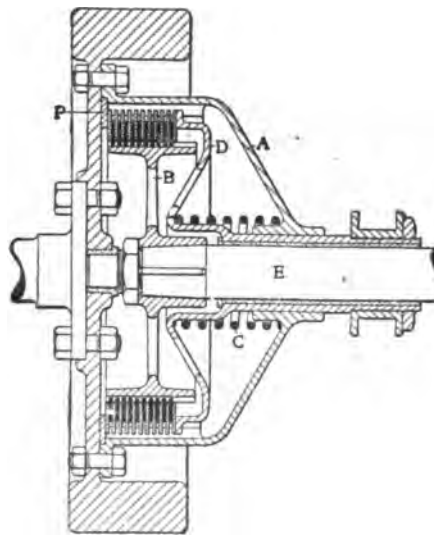

FIG. 19.—SPRING PRESSURE TRANSMITTED THROUGH CASE.

the number of discs. In a multiple disc clutch the frictional surface can be made much greater than in a cone clutch, and the frictional force per unit surface can be made smaller.

Calculation of Disc Clutches—In Fig. 20 is shown one disc of a multiple disc or plate clutch. In this figure dr is the width of an extremely narrow annular ring of radius r. Suppose that the unit pressure on the surface of this disc is p pounds per square inch. The area of the annular ring of width dr is

$$A = 2\pi r\, dr$$

and the normal pressure on it is

$$N = 2 \pi r \, dr \, p.$$

This causes a frictional force

$$2 \pi r \, dr \, p \, f,$$

where f is the coefficient of friction, and a torque

$$2 \pi r \, dr \, p \, f \times \frac{r}{12} = \frac{\pi r^3 \, dr \, p \, f}{6}.$$

Now, in order to find the torque which the friction over the entire surface of the disc will produce we have to integrate the above expression between the limits r_o (outside radius) and r_1 (inside radius)

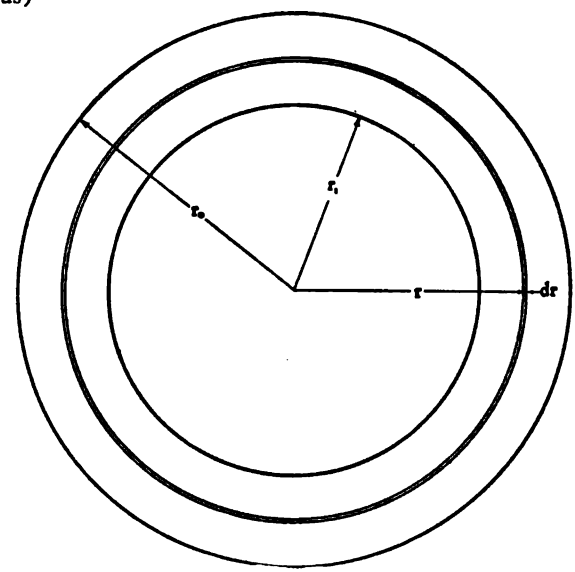

FIG. 20.

$$\int_{r_1}^{r_o} \pi \frac{r^3 \, dr \, p \, f}{6} = \frac{\pi}{18} p \, f \, (r_o^4 - r_1^4) \text{ pounds-feet} \ldots\ldots\ldots (9)$$

Equation (9) is useful in the case of clutches whose discs have a very small inside radius. In the original type of this clutch the discs were often mounted directly upon the driven shaft, and the inside radius of the clutch disc was less than one-quarter the outside radius. However, in modern automobile clutches the inside radius is generally more than three-fourths the outside radius, and the so-called discs are really in the form of narrow annular rings. There are two main reasons for making the ele-

ments of the clutch ring-shaped rather than disc-shaped. The first is that the wear of the disc increases with the distance from the centre of rotation, owing to the fact that the speed of slippage increases with the distance from the axis. Hence, if there is a great proportional difference between the outside and inside radii, the rates of wear near the inner and outer edges will be greatly different. The result will be that as the outer portion of the disc becomes thinner than the inner portion, the pressure over its surface will become unevenly distributed, the unit pressure being greater near the inner edge than near the outer edge, and consequently the clutch will transmit less power than originally with the same spring pressure.

The other reason is that the resistance to lateral motion of the discs depends directly upon the pressure between the driven discs and their keys or keyway walls, which is less the greater the inner radius of the discs. When the clutch is disengaged the discs are not positively pulled apart, but are supposed to be either jarred apart by the vibration or to be forced apart by auxiliary springs, and especially in the former case is it desirable that the resistance to their lateral motion be as little as possible, as there is then less danger of dragging.

In the case of clutch discs or rings whose inner radius is more than two-thirds of the outer radius it is permissible to consider the engaging pressure (and hence the frictional force) concentrated at a distance from the axis of rotation equal to the arithmetical mean between the outer and inner radii (r_m). The frictional force at any contact surface then is Pf, the aggregate friction force $(n-1)\,Pf$, and the moment of the frictional force or torque.

$$T = \frac{r_0 + r_1}{2}(n-1)\,Pf \qquad (10)$$

In any given problem of design the torque to be transmitted is a fixed quantity, but the limiting torque of the clutch is the product of four variables, viz., the mean radius of the discs, the number of contact surfaces, the spring pressure and the friction coefficient. Since these factors are independently variable, it is not surprising that practice in disc clutch design is not in the least uniform. The tendency is rather toward small mean radii and a very considerable number of discs, since the inertia increases as the square of the radius and directly as the number of discs, whereas the capacity of the clutch increases directly with both the radius and the number of discs. The coefficient of fric-

tion, of course, can be changed only by changing the material of the discs or the lubricant.

Material of Discs—In the type of disc clutch which has been used the longest in automobile practice, both sets of discs are metallic and run in oil. The discs are generally made from saw steel, about $\frac{1}{16}$ inch thick, stamped rings of any desired diameter, with driving lugs or key slots, as desired, being furnished by several saw steel manufacturers. Some manufacturers believe that steel on bronze gives better wear and make one set of the discs of the latter material. Saw steel is a very suitable material, being hardened and more uniform in thickness than ordinary sheet steel. Sheet copper is also used together with sheet steel. Whatever material is used, the greatest care must be exercised to get the thickness as nearly uniform as possible and to give the surfaces a smooth finish.

Laws of Friction—The coefficient of friction between metals with lubrication varies widely according to conditions. Some of the laws of friction which have a bearing on the value of the coefficient of friction in disc clutches may be stated as follows: The coefficient of friction between two metallic surfaces separated by a film of lubricant is much greater when the surfaces are at rest relative to each other than when there is sliding motion between them. The friction does not depend so much upon the material of the discs as upon the lubricant. When the discs are stationary the coefficient of friction increases with the specific pressure. On the contrary, when there is sliding motion between the surfaces the coefficient of friction decreases as the specific pressure increases (up to a certain limit which, however, is far beyond the pressure used in disc clutches). The coefficient of friction also varies with the speed; it seems to be a minimum at 100 to 150 feet per minute, increasing as the speed is increased or diminished, and approaching the static friction coefficient at very low speeds.

From the above it will be seen that it is difficult to assign a definite value to the coefficient of friction f for use in the calculation of friction clutches. However, the author believes it to be on the safe side to use a coefficient $f=0.04$ for steel on steel, phosphor bronze or copper with lubrication.

Disc Clutch Data—Denoting the mean radius of the discs by r_m and the number of frictional surfaces by n_s, the equation for the limiting torque of a disc clutch may be written

$$T = n_s r_m P f.$$

Now, even if the material of the discs is settled, so that f is a fixed quantity, there remain three independent variables, and the desired torque, therefore, can be obtained in many different ways. In this connection it is to be remembered that if we increase the mean radius r_m we increase the inertia of the clutch, even if we correspondingly decrease the number of discs so as to retain the same limiting torque. On the other hand, if we increase either the number of discs or the spring pressure we increase the work which must be done by the operator in disengaging the clutch, because the spring must be compressed an amount proportional to the number of discs, in order that there may be sufficient clearance between adjacent discs, and the work done in compressing the spring is measured by the product of the clutch spring pressure by the distance of the compression of the spring during the process of declutching. The foot has only a small range of comfortable motion, and the pressure which can be exerted by it is also limited. It is evident that the product Pn_s is a measure of the work to be done in disengaging a clutch, and it has been found that this product should not exceed 12,000 if clutch operation is not to be irksome. The friction force per unit of contact surface varies from 0.6 pound per square inch to 2 pounds, the average value being 1 pound. In clutches of this type (metal-to-metal-in-oil) the average ratio of the inside to the outside radius is five-sixths.

If we made $Pn_s = 12{,}000$ for all clutches, then the small clutch would be as hard to operate as a large one, which is not exactly desirable. Besides, the mean radius r_m would increase in direct proportion to the torque to be transmitted; it should increase with the torque, but not in direct proportion. It may well increase as the square root of the torque, and the following equation gives a good value:

$$r_m = \frac{\sqrt{T}}{3 \cdot 4}$$

We may therefore recapitulate the rules for multiple disc clutch design as follows:

$$\frac{r_1}{r_0} = \frac{5}{6} \textit{ in average practice.}$$

Friction force = 1 pound per square inch.

Coefficient of friction $f = 0.04$.

The area of one friction surface is

$$\pi (r_0^2 - r_1^2) \textit{ square inches.}$$

and the frictional force between adjacent discs, expressed in

pounds, is the same. The total frictional force at the mean radius of the discs is

$$\frac{T \times 12}{r_m},$$

hence the number of friction surfaces required is

$$\frac{\frac{12\,T}{r_m}}{\pi(r_0^2 - r_1^2)} = \frac{12\,T}{\pi\, r_m (r_0^2 - r_1^2)}$$

and the number of discs required

$$n = \frac{12\,T}{\pi\, r_m (r_0^2 - r_1^2)} + 1 \quad \ldots\ldots (11)$$

The spring force required is

$$P = \frac{\pi(r_0^2 - r_1^2)}{0.04} \quad \ldots\ldots (12)$$

Both of the above equations can be materially simplified if the ratio of the inner to the outer radius is fixed.

For	$n =$	$P =$
$\frac{r_1}{r_0} = \frac{9}{10}$	$\frac{21.2\,T}{r_0^3} + 1$	$14.9\,r_0^2$
$\frac{r_1}{r_0} = \frac{8}{9}$	$\frac{19.3\,T}{r_0^3} + 1$	$16.5\,r_0^2$
$\frac{r_1}{r_0} = \frac{7}{8}$	$\frac{17.4\,T}{r_0^3} + 1$	$18.4\,r_0^2$
$\frac{r_1}{r_0} = \frac{6}{7}$	$\frac{15.5\,T}{r_0^3} + 1$	$20.8\,r_0^2$
$\frac{r_1}{r_0} = \frac{5}{6}$	$\frac{13.6\,T}{r_0^3} + 1$	$24.\,r_0^2$
$\frac{r_1}{r_0} = \frac{4}{5}$	$\frac{11.8\,T}{r_0^3} + 1$	$28.3\,r_0^2$
$\frac{r_1}{r_0} = \frac{3}{4}$	$\frac{10\,T}{r_0^3} + 1$	$34.3\,r_0^2$

If we assume an inner radius equal to five-sixths the outer radius and substitute in the equations the value of the torque of a four cylinder, 4x5 inch motor we find that the mean radius of the discs should be 3.4 inches, the outer radius 3.71 inches—say 3.75 inches—and the inner radius 3.12 inches—say 3⅛ inches. The number of discs figures out to 35 and the spring pressure to 337 pounds. An uneven number of discs is generally employed.

When the spring exerts its pressure through the clutch shaft or through spring bolts secured into the web or spokes of the inner drum, it is well to have one more driven disc, whereas when the spring exerts its pressure through the clutch housing it is best to have one more driving disc. In either of these cases if the

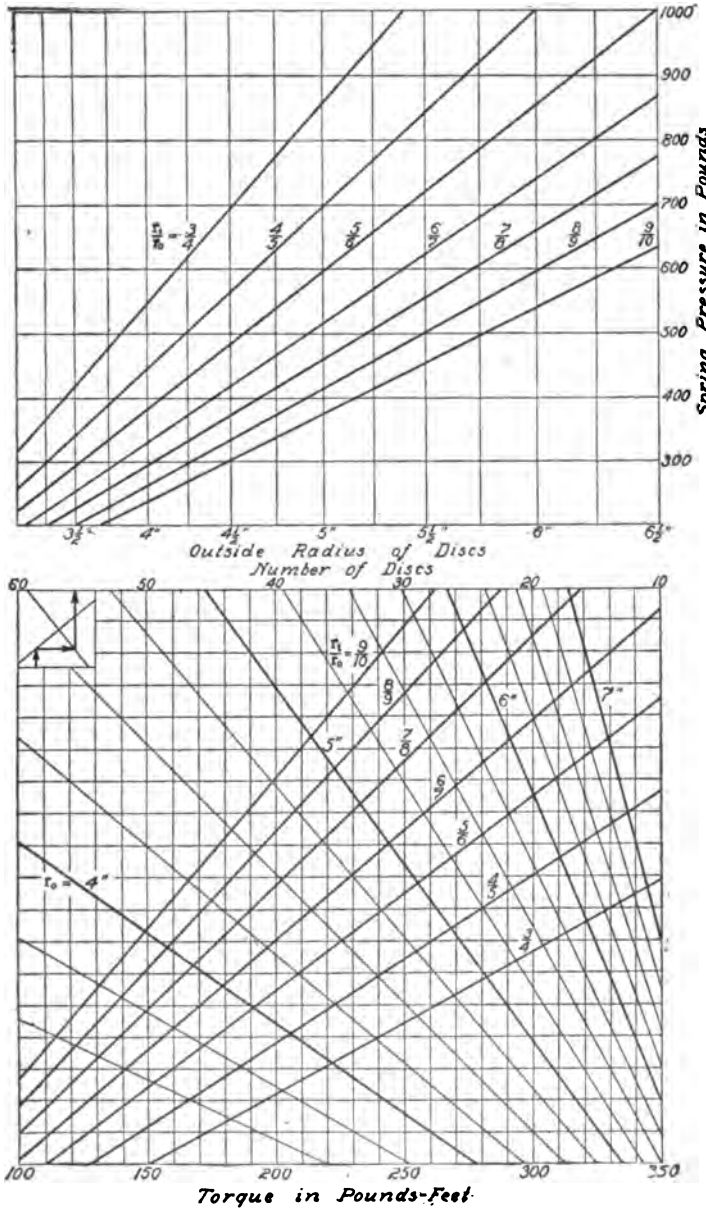

CHART II.—GIVING NUMBER OF DISCS AND SPRING PRESSURE REQUIRED IN MULTIPLE-DISC-IN-OIL CLUTCHES.

clutch is slipping there will be no relative rotary motion between the two parts against which the clutch spring bears, hence no ball thrust bearing will be required to take up the thrust of the spring.

Number of discs and spring pressures required in metal-to-metal multiple disc clutches can be readily found from Chart II, after the torque of the motor has been obtained from Chart I. Chart II is based on a unit frictional force of 1 pound per square inch and a coefficient of friction of 0.04. If a very light clutch is desired the number of discs found from the chart can be reduced, and the spring pressure found increased in proportion.

Methods of Releasing Discs—In order to insure positive separation of the discs when the spring pressure is removed, and thus prevent dragging of the clutch, it is necessary to provide

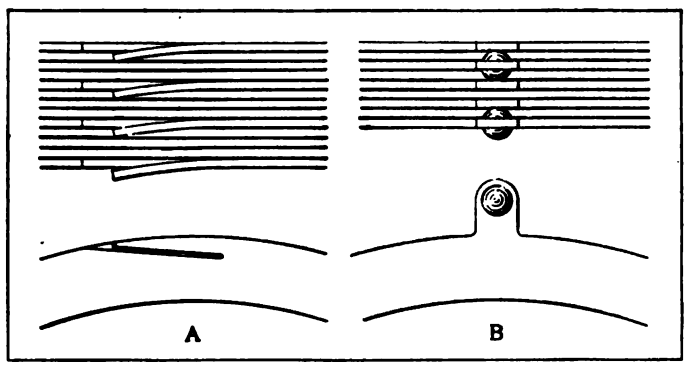

FIG. 21.—METHODS OF SEPARATING DISCS.

alternate discs with tongues sprung to one side, as shown in Fig. 21 at *A*, or some similar means. Two such tongues on each driving disc, one opposite the other, are sufficient. An alternate method of insuring positive separation is illustrated in the same figure at *B*, and consists in providing the driving discs with radial lugs on the outside circumference into which are riveted buttons whose heads are slightly thicker than the driven discs, so that the lugs are slightly sprung when the discs are forced together by the clutch spring. The driving discs may be provided with four lugs, at quarters, and rivets inserted into two of these lugs, located oppositely. The discs may then be assembled in such a manner that the riveted lugs of adjacent driving discs are at quarters. Where separating springs of this kind are used, the clutch spring must be made sufficiently strong to overcome

the force of these springs and still give enough frictional force between the discs.

Constructional Details—Multiple disc clutches, the same as other types, are generally combined with the flywheel, but occasionally they are enclosed in a special compartment of the change gear case, which can be done without difficulty, since these clutches can be made of a relatively small diameter. When thus enclosed in the gear box or when used in a unit power plant, there is no need to specially enclose the clutch. But in other cases an oil-tight housing must be provided. This housing is sometimes made of one-eighth inch pressed steel in a single piece, with a radial flange at its open end for bolting to the flywheel web and a hub portion either formed integral or riveted

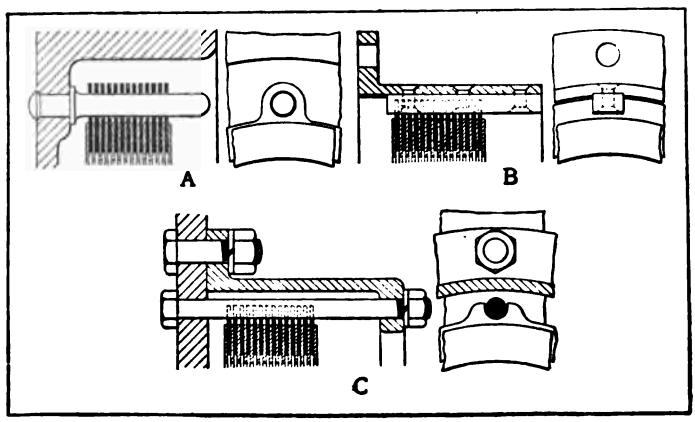

FIG. 22.—METHODS OF DRIVING DISCS.

to it which takes the adjusting bushing for the spring if the spring pressure is transmitted through the housing, and forms an oil-tight joint with the hub of the disc compressing spider. This housing may also be made of two castings—a cylindrical shell and an end plate. Some designers even provide a stuffing box in the hub of the clutch housing to insure oil tightness.

If the clutch has no special housing it may be driven from the flywheel by radially extending driving pins secured into the web of the latter (*A*, Fig. 22). If a housing is used the driving is done either through keys riveted to the cylindrical shell (*B*, Fig. 22), or through bolts which hold both the shell and the end plate to the flywheel (*C*, Fig. 22). The key slots on the outside of the

driving discs are cut either in the full ring, or the rings are formed with driving lugs which have key slots or driving pin holes cut in them. The latter form of construction leads to a saving in weight, but necessitates a somewhat more expensive die for stamping out the discs. In any case, there must be a liberal clearance between the inner surface of the driving keys and the outer edge of the driven discs and between the inner edge of the driving discs and the surface of the inner drum so there will be no dragging owing to contact at these surfaces after slight wear.

Practice as to the number of driving pins or keys and driving lugs on the driven discs varies greatly. Some designers provide as many as ten or twelve large size keys, which seems to be more than necessary. The number and size of keys do not affect the freedom of lateral motion of the discs, but, of course affect the wear of keys and key slots, but clutches with only three one-half inch driving pins with an aggregate maximum pressure of three hundred pounds on them are known to give good results.

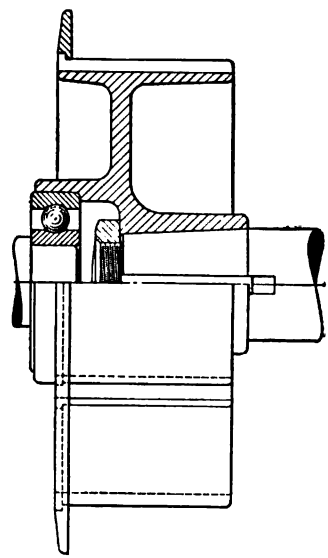

FIG. 23.—INNER DRUM.

It is generally considered that one-hundredth of an inch is the minimum clearance between discs which will insure freedom from dragging, and in the design of the housing and the inner drum allowance must be made for end motion of at least $\frac{n_s}{100}$ inch. In practice the allowance made varies from 1/100 to 1/64 inch per friction surface. However, one well known manufacturer of multiple disc clutches allows only from 1/125 to 1/175 inch.

The inner drum or the shaft to which it is secured is usually supported upon or in a radial ball bearing. The reason for the

use of a ball bearing at this point is that the bearing, if plain, would be hard to lubricate effectively except through the engine tailshaft, and, besides, the friction of this bearing tends to produce dragging, and the tendency to drag is already the weak point of the multiple disc clutch. Usually the radial bearing is carried upon a short tailshaft, and its outer race is forced into a counterbore in the drum, but in some constructions the bearing is carried upon the end of the clutch shaft and its outer race rests in the bore of the flywheel web. The drum (Fig. 23) is preferably made of a steel or malleable iron casting and milled with from four to twelve key slots in which engage the key lugs formed on the driven discs. The end plate which forms the stop for the discs is made separate from the drum and is secured to its rim by machine screws, or else passed over the drum against a small flange turned thereon.

The rim of the drum should be made sufficiently longer than the combined thickness of the discs to allow the latter to separate completely without passing beyond the rear edge of the rim.

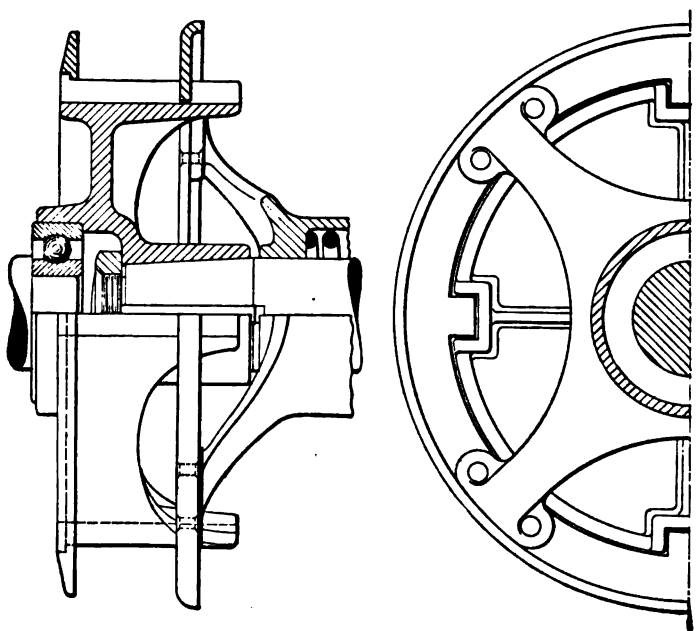

FIG. 24.—SKELETON FORM INNER DRUM AND PRESSER.

Owing to the fact that the rim of the compressing spider must move over the rim of the inner drum for a considerable distance, while at the same time the web of this spider must be quite close to the web of the inner drum, so the clutch spring will not extend too far to the rear of the clutch proper, this compression spider usually has a rather awkward form and is quite heavy. This difficulty can be overcome by making the inner drum in skeleton form, as shown in Fig. 24, cutting away its rim between those portions where the keyways are, and making the compression spider spoked, the spokes entering between the lateral projections of the inner drum rim. Besides reducing the weight of the driven part of the clutch, this construction allows of a more compact housing.

Hele-Shaw Clutch—A special type of multiple disc clutch which is extensively used both in this country and abroad is the Hele-Shaw, which consists of alternate discs of steel and phosphor bronze with V-groove corrugations whose walls form an angle of 35 degrees. Only the walls of the V-grooves come in frictional contact, and the remaining parts of the discs merely serve to help radiate the heat engendered during slippage. Oil holes are drilled through the inner walls of the grooves near the peak, so the oil can enter and escape freely. It is obvious that in this clutch there is a sort of wedge action, the same as

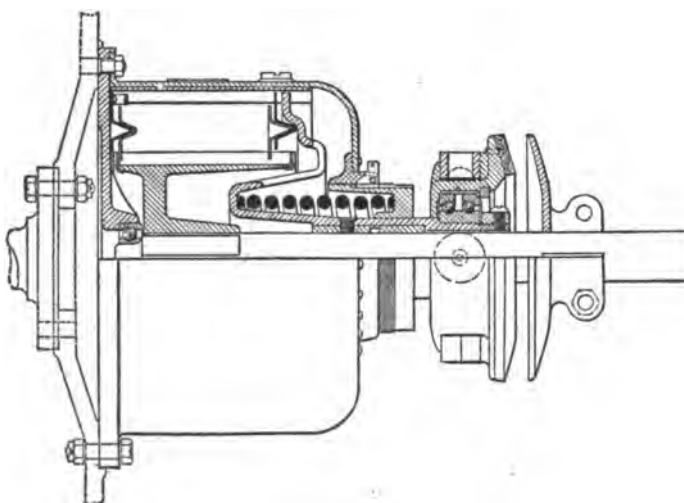

FIG. 25.—HELE-SHAW CLUTCH.

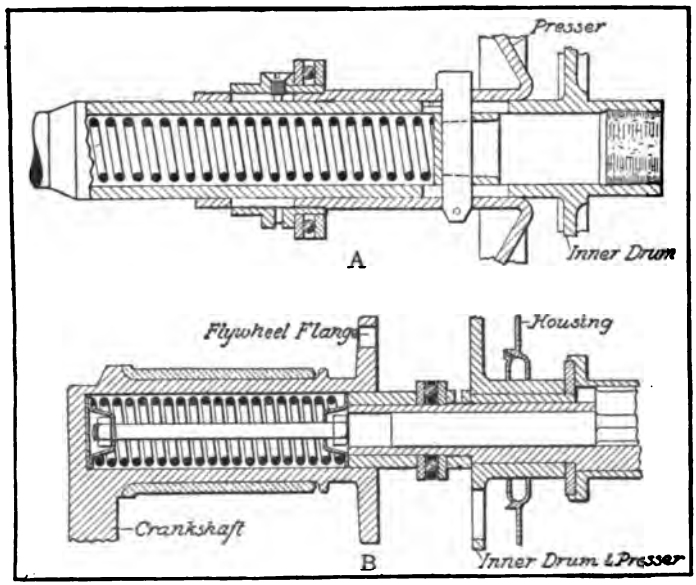

FIG. 26.—CLUTCH SPRINGS INSIDE SHAFT.

in a cone clutch, and much less spring pressure is required to produce a certain amount of frictional force than with a flat disc clutch of the same number of discs and the same mean diameter. On the other hand, the discs have to be moved laterally considerably farther to obtain the proper clearance between them, and the number of discs that can be used is therefore more limited. The Hele-Shaw clutch shown in Fig. 25 is provided with a clutch brake, as are most large size disc and plate clutches.

Springs Inside of Shaft—Generally the clutch spring surrounds the clutch shaft, as shown in Figs. 17, 18 and 19, but some designers prefer to place it inside the clutch shaft or the engine tailshaft. Two such designs are shown in Fig. 26. In the first of these (Panhard) the spring acts through a plug and a key which extends through a long diametral slot in the shaft, against the clutch compressing spider. In the second (Hudson "33") the clutch spring is located inside the rear bearing of the crankshaft and presses through a steel washer, a collar on the clutch shaft, a ball thrust bearing and a screw collar against the hub of the inside clutch drum. It should be explained that in this clutch the usual order of things is reversed, the inner drum being moved in an axial direction in order to disengage the clutch, thus serving as "presser."

Lubrication of Discs—The surfaces of the discs should be covered with lubricant when there is slippage, but it is also desirable that all or at least most of the lubricant be squeezed out from between them when the full pressure of the spring is applied, since the clutch will hold the better the less lubricant there is on the discs. In order to insure these conditions, some manufacturers provide the discs with radial slots extending over half their width, as shown in Fig. 27, through which the oil may escape when the discs are pressed together.

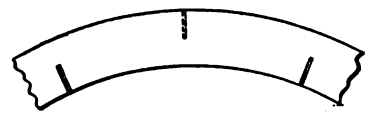

FIG. 27.—CLUTCH DISCS WITH OIL SLOTS.

Whereas the weak point of the ordinary cone clutch is its great inertia, that of the multiple disc-in-oil clutch is its tendency to drag if the oil in the clutch housing is not suitable for the purpose, or if too much is introduced. Most makers recommend a mixture of machine oil or gas engine oil with kerosene. It is obvious that the thinner the lubricant the better the clutch will hold, while the more viscous the lubricant the more gradually it will pick up its load.

Dry Plate Clutches—In order to overcome the dragging evil the dry plate clutch was introduced. In this one set of plates

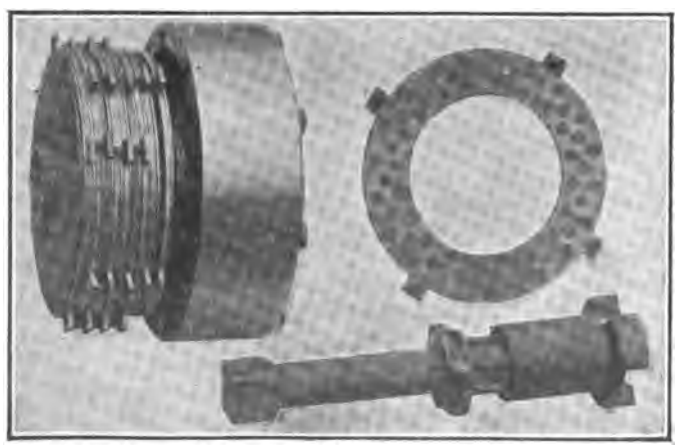

FIG. 28.—CORK INSERT CLUTCH.

is either faced with asbestos fabric on both sides or else provided with cork inserts. Both of these materials when in contact with steel have a much greater friction coefficient than steel or bronze on steel. Cork on steel is claimed to have a friction coefficient of about 0.34 when not lubricated. The cork, of course, is quite compressible. It is customary to make the plugs of such size that when free they project about $\frac{1}{8}$ inch above the surface of the metal plate. Hence when the discs are forced together the contact is at first between metal and cork only, and owing to the compressibility of the cork the engagement is very smooth. However, when the full pressure of the spring is applied to the friction surfaces the corks are compressed flush with the plate surface, and one of the surfaces is then part metal and part cork. This, of course, will reduce the effective friction coefficient somewhat, depending upon the relative area of the corks and of the metal and upon the compression of the cork at the moment metal to metal contact is established. As a rule, the cork covers from 25 to 50 per cent. of the total area of the discs, though there are extreme cases in which either more or less than the above range is covered.

The majority of disc clutches with cork inserts are of the three plate type, the middle plate containing the corks, though occasionally cork inserts are also used in multiple disc clutches. Moreover, it is not necessary to run the cork insert clutches dry. Lubrication will reduce wear of the corks, but, of course, it will also reduce the friction coefficient. A typical cork insert clutch is illustrated in Fig. 28.

Asbestos fabric is also used for facing clutch discs. This is a fabric composed very largely of asbestos fibre and containing some brass wire and cotton, which latter give the necessary tenacity, while the asbestos is used on account of its good frictional qualities and its resistance to heat. The asbestos fabric is secured to the metal discs by means of rivets passing through the metal and asbestos on opposite sides of it. The frictional force in asbestos-faced disc clutches varies from less than one pound to about four pounds per square inch. With lower friction per unit surface the life of the clutch will, of course, be greater. The friction coefficient of asbestos fabric on steel seems to be approximately 0.3, and for ordinary purposes a normal pressure of 10 pounds per square inch will give satisfactory results. This gives a frictional force of three pounds per square inch, and

the formulas for number of discs and spring pressure required become

$$n = \frac{4T}{\pi r_m (r_o^2 - r_1^2)} \quad \ldots\ldots (13)$$

and

$$P = 10\pi (r_o^2 - r_1^2) \quad \ldots\ldots (14)$$

From the data at hand it seems that these same equations are applicable to cork insert clutches in which the spring acts on the discs directly and in which the corks cover from 25 to 50 per cent. of the total surface.

It may here be pointed out that a clutch for a vehicle in which the gear has to be changed frequently and the clutch therefore slipped a great deal should logically be designed with a somewhat lower unit friction force than a clutch for a high powered touring car, for instance, the speed of which can be largely controlled by the throttle. A lower unit frictional force will result in less wear and less heating.

The asbestos is generally secured to the driving discs, so the driven member may have the least possible inertia, but in one design the asbestos rings are free between the two sets of metal discs. The latter are made about ⅛ inch thick to get sufficient bearing surface on the keys; if lighter stock is to be used the edges may be flanged to get additional driving area. Fig. 29 shows the Packard dry disc clutch which comprises six driving and five driven discs.

Three Plate Clutches—Another method of obviating the dragging tendency of disc clutches is to use only three discs or plates, without lubricant. These discs are made of cast iron and bronze, or of cast iron and steel. Since there are only two friction surfaces, for moderately high powers it is necessary to use rather large discs and to multiply the pressure of the clutch spring by levers or toggle mechanisms. Fig. 30 shows a typical design of this kind in which the spring pressure is multiplied by a toggle mechanism. One of the three discs is a driving disc, and the other two are driven discs. The driving disc is driven from the flywheel through keys riveted to the inside of the flywheel rim. One of the driven discs, the one nearest the flywheel, is secured to the clutch shaft and is provided with four sets of laterally extending lugs on which bell cranks are fulcrumed. One arm of these bell cranks connects through a link with a sliding sleeve on the clutch shaft on which the clutch spring acts. The other arm of the bell crank is provided with a set screw, the point of which presses against the rearmost driven disc. This latter disc is provided with driving lugs which enter between the

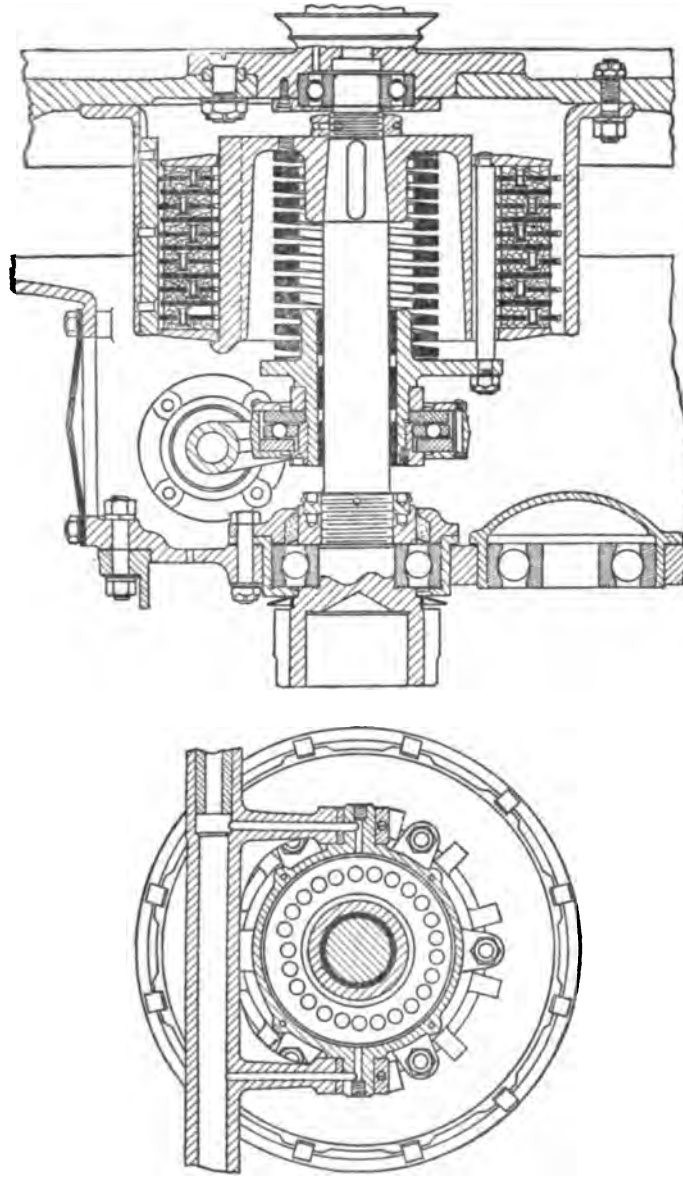

FIG. 29.—DRY DISC CLUTCH (PACKARD.)

lugs on the other disc serving as a fulcrum for the bell crank. The set screws permit of making adjustment for wear of the discs. Separation of the discs is effected by means of small coiled springs inserted into drill holes in one of the driven discs and pressing against the other driven disc.

The multiplying factor of the toggle mechanism attains the infinite as the toggles assume a radial position. In practice, of

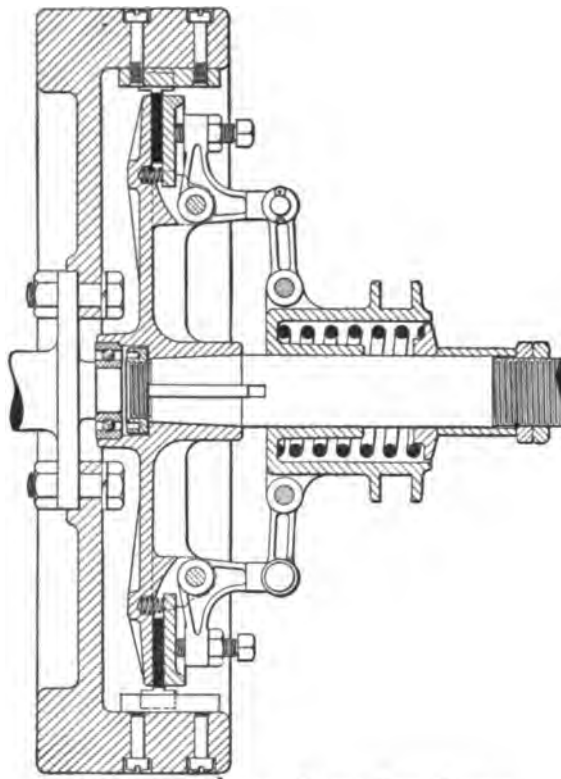

FIG. 30.—THREE PLATE TOGGLE TYPE CLUTCH.

course, the set screws must be so adjusted that this cannot happen, as the toggle links would pass by the radial position and the clutch would disengage again. If the links make a small angle ϕ with a radial line then the multiplying factor is equal to cotangent ϕ. This may be readily seen by reference to Fig. 31, in

which $A\ B$ represents a link of the toggle. Let P be the pressure of the spring and N the radial pressure exerted on the bell crank arm. Now let point B be moved the slightest distance under the force of the spring P_1 so that the angle $B\ A\ C$ (ϕ) decreases to $\phi - d\ \phi$. Now we have

$$C\ B = A\ B\ \sin\ \phi$$
$$A\ C = A\ C\ \cos\ \phi$$

When ϕ decreases to $\phi - d\ \phi$, $A\ B$ sin ϕ decreases by $A\ B$ cos $\phi\ d\ \phi$ and $A\ B$ cos ϕ increases by $A\ B$ sin $\phi\ d\ \phi$. But the product of the force into the distance through which it works represents the work done, and this must be the same at both points A and B. Hence,

$$P \times A\ B \cos \phi\ d\ \phi =$$
$$N \times A\ B \sin \phi\ d\ \phi$$

and

$$\frac{N}{P} = \frac{\cos \phi}{\sin \phi} = \cot \phi$$

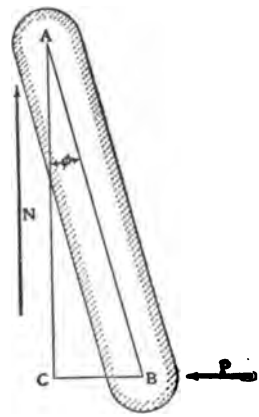

FIG. 31.

A plate clutch in which the spring pressure is multiplied by double armed levers is illustrated in Fig. 32. In this clutch there are two driving discs, one being constituted by the web of the flywheel, and one driven disc. The free driving disc is driven from the flywheel through a stud bolt passing through the flywheel web and an annular flange bolted to the flywheel rim. The stud bolt is provided with a collar against which the short arm of the double armed lever takes purchase. This lever is fulcrumed on lugs cast integral with the free driving plate, and its long arm extends radially inward and is pressed against by the sliding sleeve which contains the clutch spring and is formed with the groove or flange for the shipping collar.

Band Clutches—Band clutches are of two kinds, viz., contracting and expanding. A contracting band clutch consists of a drum and a metal band surrounding it, which may be lined with friction material. One end of the band is fixed to a spider or housing carried upon one of the connected shafts, and the other end can be displaced angularly with relation to the first so as to contract the band into frictional contact with the drum. Contracting band clutches are of three different types. The

first of these, shown in Fig. 33, comprises two bands of which each extends substantially half way around the circumference of the clutch drum. The bands are generally made from thin strip steel, and lined with leather. One end of each band is hinged to one arm of a two armed spider secured to the driven shaft or clutch shaft, and the other end to the short arm of a double armed lever fulcrumed on the arm of the spider, the

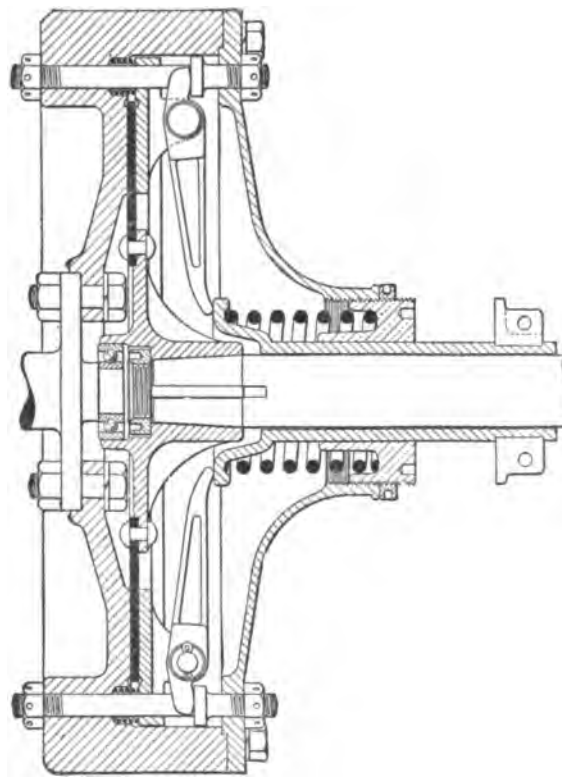

FIG. 32.—PLATE CLUTCH, LEVER TYPE.

inwardly extending arm of the lever being adapted to be moved outward from the clutch axis by a sliding cone or wedge under the pressure of the clutch spring. When the levers are thus moved around their fulcra the bands are drawn tight on the clutch drum, and driving connection is established.

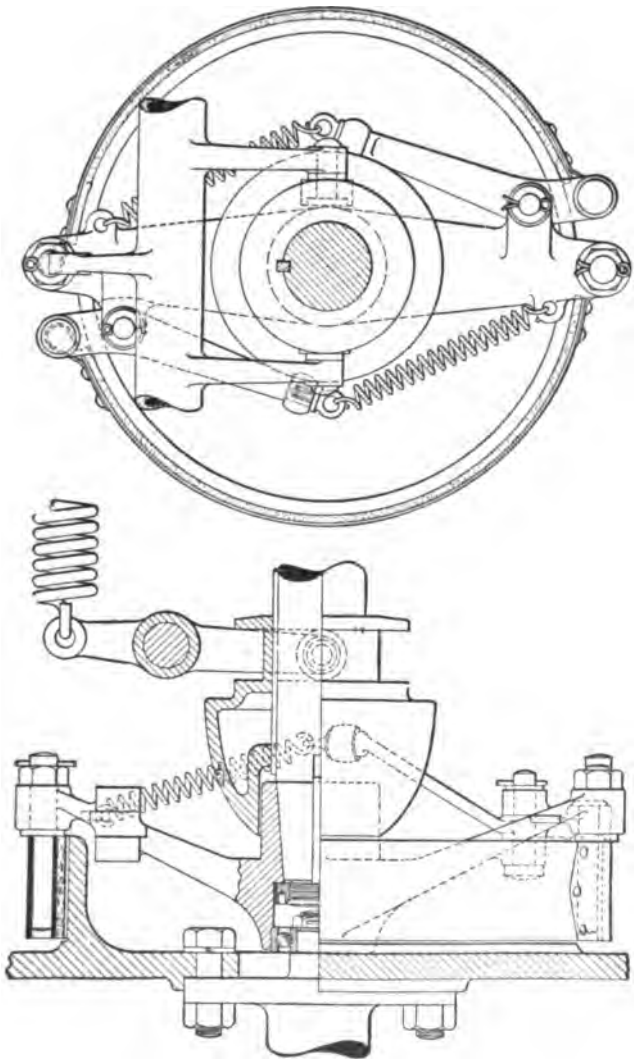

FIG. 33.—DOUBLE BAND CLUTCH.

Fig. 34 shows the Mercedes coil clutch, which may also be regarded as a form of band clutch. The band in this case consists of a coil of steel, one end of which is anchored to the housing of the clutch and the other end of which is attached to one arm of a double armed lever whose fulcrum support is in the end wall of the housing. The long arm of this lever is acted upon by a sliding cone against which the clutch spring presses. When the sliding cone is forced under the lever arm the steel coil is contracted upon the clutch drum and grips the latter. The

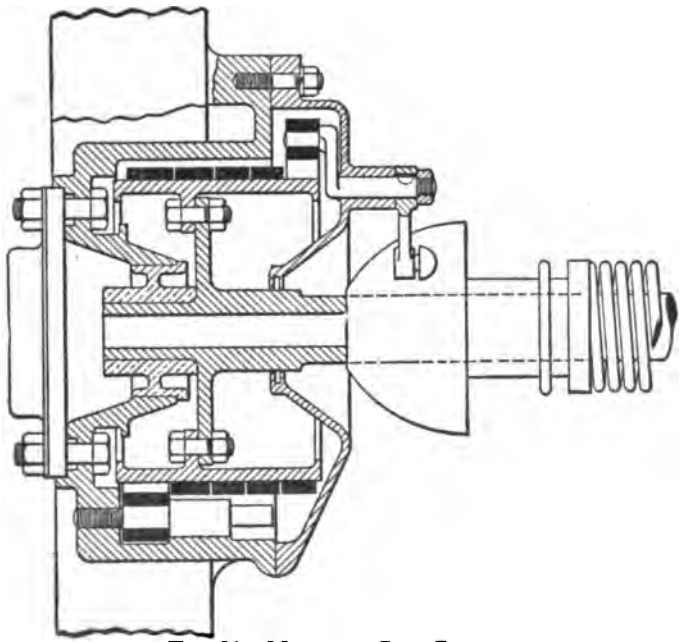

FIG. 34.—MERCEDES COIL CLUTCH.

housing is formed integral with the flywheel and the drum is secured to the clutch shaft. This clutch is entirely enclosed and runs in oil.

Theory of Band Clutch—In Fig. 35 is shown a sketch of a band clutch in which $d\theta$ represents a small arc of contact of the band on the drum and θ the angle or arc of contact between this section $d\theta$ and the point of contact between band and drum nearest to the free end of the band. At the free end a pull P_1 is exerted on the band. Owing to the friction between

the band and drum the pull on the band varies from point to point of its length. Let the pull at one side of the differential section $d\theta$ be represented by P and that on the other side by $P + dP$, as indicated in the sketch. Also let the normal pressure between the band and drum on the section $d\theta$ be represented by N and the frictional force resulting therefrom by fN. When the system is in equilibrium the forces in any direction are equal to zero. Hence, taking the forces in the horizontal plane,

$$(P + dP)\cos\frac{d\theta}{2} - fN - P\cos\frac{d\theta}{2} = O$$

But the cosine of an infinitely small angle is equal to unity, hence

$$dP = fN \quad \ldots\ldots\ldots\ldots\ldots\ldots\ldots\ldots\ldots\ldots\ldots\ldots\ldots\ldots\ldots\ldots\ldots\ldots (15)$$

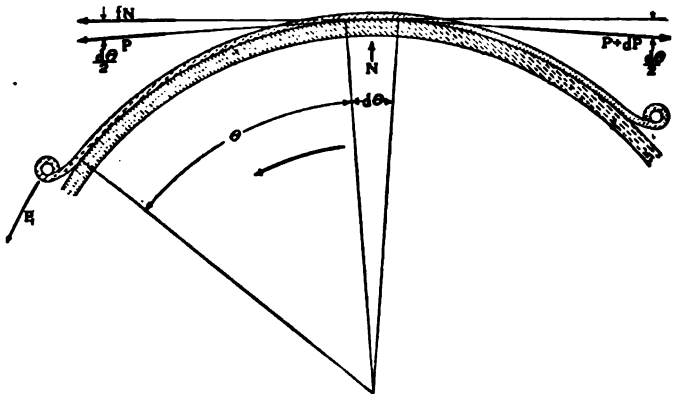

FIG. 35.—DIAGRAM OF BAND CLUTCH.

Now, taking the forces in the vertical plane,

$$N - (P + dP)\sin\frac{d\theta}{2} - P\sin\frac{d\theta}{2} = O$$

and since the sine of an infinitely small angle is equal to the arc, we may write

$$N - (P + dP)\frac{d\theta}{2} - P\frac{d\theta}{2} = O$$

$$N = P\,d\theta + dP\frac{d\theta}{2}$$

The term $dP\dfrac{d\theta}{2}$, a differential expression of the second order, may be neglected, and we may write

$$N = P\,d\theta$$

or

$$P = \frac{N}{d\theta} \quad \ldots\ldots (16)$$

Dividing equation (15) by equation (16) we get

$$\frac{dP}{P} = f\, d\, \theta$$

Now the integral of a differential expression of the form $\frac{dx}{x}$ is log x (the natural logarithm, whose base is 2.71828. Hence

$$log\ P = f\,\theta + C$$

or

$$log\ P = f\,\theta + log\ c \quad \ldots\ldots (17)$$

Remembering that in all logarithmic systems the logarithm of the base is 1, we may write

$$log\ e^{f\theta} = f\,\theta \times 1 = f\,\theta$$

Inserting this value of $f\,\theta$ in equation (17) we have

$$log\ P = log\ e^{f\theta} + log\ c$$

and taking antilogs—

$$P = c\ e^{f\theta} \quad \ldots\ldots (18)$$

To find the value of the constant c we make θ equal to zero, in which case P equals the initial pull P_1 applied to the free end of the band.

$$P_1 = c\ e^{0}.$$

But any term with the exponent zero is equal to unity, hence

$$c = P_1$$

and inserting this value in equation (18) we have

$$P = P_1\ e^{f\theta} \quad \ldots\ldots (19)$$

This latter equation gives the pull on the band at any angle θ from the point of contact between band and drum nearest the point of application of the initial pull. The total frictional force F between the band and drum is equal to the difference between the initial pull and the pull at the point of contact between band and drum farthest from the point of application of the initial pull—

$$F = P_1\ e^{f\theta} - P_1 = P_1\ (e^{f\theta} - 1)$$

and

$$P_1 = \frac{F}{e^{f\theta} - 1} \quad \ldots\ldots (20)$$

In using this equation the arc θ must be expressed in radians. Values of the expression $e^{f\theta} - 1$ for various values of $f\,\theta$ may be found from Fig. 36.

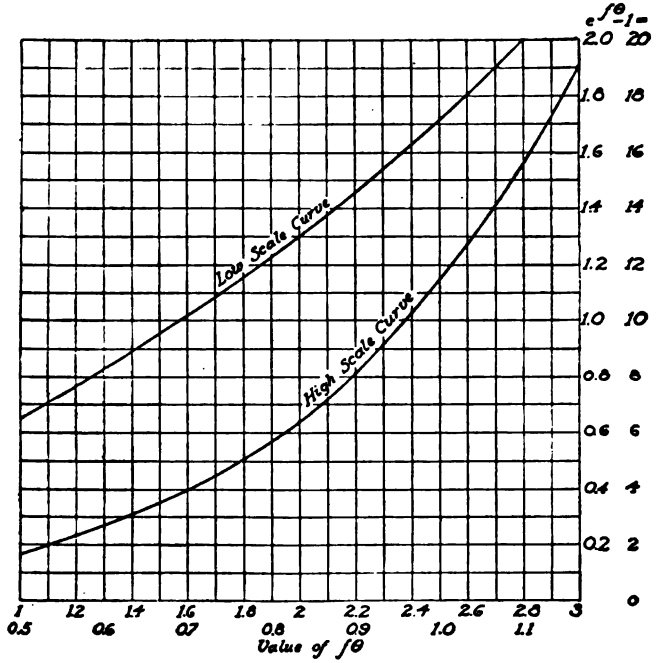

FIG. 36.—CURVE GIVING RATIO BETWEEN FRICTIONAL FORCE AND PULL ON BAND.

Sample Calculation—Now let it be required to design a band clutch for a four cylinder 4x5 inch motor, which, as we have seen, develops a torque of 133 pounds-feet. Suppose we choose a drum 12 inches in diameter, then the frictional force required at the surface of the drum is

$$\frac{133 \times 12}{6} = 266 \textit{ pounds.}$$

Let the band be made of steel and lined with leather, so we can figure on a coefficient of friction $f=0.2$. In the case of a clutch comprising a band extending all around the drum the arc of contact will be about 5.5 radians, and in the case of a clutch with two bands, each extending half way around the drum, the arc of contact of each will be about 2.5 radians. These figures are approximate and the correct arcs of contact would have to be determined from the drawings.

Let us take the case of a single band brake. Inserting values in equation (20) we have

$$P_1 = \frac{266}{2.718^{(0.2 \times 5.5)} - 1} = 133 \text{ pounds.}$$

This is the pull which must be exerted on the free end of the band. The pull of the fixed end on its anchorage is equal to the pull on the free end plus the friction,

$$133 + 266 = 399 \text{ pounds,}$$

and the band and its anchorage must be designed sufficiently strong to withstand this stress.

If the band is of uniform width the normal pressure at its contact surface varies from end to end, being least near the free end and most near the fixed end. From equation (16) it will be seen that N varies directly as the pull P on the band. We know that the frictional force $F = 266$ pounds, and since the coefficient of friction is 0.2, the aggregate normal pressure is

$$\frac{266}{0.2} = 1{,}330 \text{ pounds.}$$

Also, if we allow an average unit pressure of 18 pounds per square inch, then the frictional area required is

$$\frac{1{,}330}{18} = 74 \text{ square inches,}$$

and since the drum has a diameter of 12 inches, and consequently a circumference of 37.68 inches, it would have a width of

$$\frac{74}{37.68} = 2 \text{ inches (appr.)}$$

The normal pressure, as already stated, will not be uniform but greater near the fixed end than near the free end in the proportion of 399 : 133 or 3 to 1. Hence the lining will wear faster near the fixed end.

Effect of Centrifugal Force—At high speeds, like those employed in automobile clutches, the centrifugal force on the band has quite an effect on the friction between the band and the drum, and this is the cause of the chief difference between a contracting band clutch and an expanding band clutch. The above analysis with respect to the frictional force between band and drum at low speeds applies equally to both types of band clutches, but the centrifugal force tends to expand the band, and hence to decrease the frictional force of a contracting clutch, and to increase the frictional force of an expanding clutch.

Let w be the weight of a section of the band 1 inch in length. Then the weight of an element $d\theta$ of the band is $w\,r\,d\,\theta$ and the centrifugal force on this element (see equation 31, Vol. 1) is

$$1.226\ (w\,r\,d\,\theta)\ n^2 \frac{r}{12} = 0.102\ w\,n^2\,r^2\,d\,\theta,$$

where w is the speed in revolutions per second and r the radius in inches. This force, which we will denote by $F_c\, d\,\theta$ (F_c being the centrifugal force on a section of the band equal to one radian), in a contracting clutch acts in the same direction as force N. Hence we may write the equation of the forces in the vertical plane—

$$P\, d\,\theta = N + F_c\, d\,\theta$$

Transposing and contracting,

$$(P - F_c)\, d\,\theta = N,$$

and

$$P - F_c = \frac{N}{d\,\theta}.$$

But since F_c is constant,

$$d\,(P - F_c) = d\,P = f\,N \text{ (equation 15).}$$

Hence

$$\frac{d\,(P - F_c)}{P - F_c} = f\,d\theta$$

Integrating both sides of the equation,

$$log\ (P - F_c) = f\,\theta + C = f\,\theta + log\ a$$

and taking antilogs—

$$P - F_c = a\,e^{f\theta}$$

In order to determine the constant for this case, let $\theta = o$, then $P = P_1$, and

$$P_1 - F_c = a,$$

hence

$$P = (P_1 - F_c)\,e^{f\theta} + F_c$$

and

$$F = P - P_1 = (P_1 - F_c)\,e^{f\theta} + F_c - P_1$$

Multiplying out,

$$F = P_1\,e^{f\theta}{}_1 - F_c\,e^{f\theta} + F_c - P_1$$
$$= P_1\,(e^{f\theta} - 1) - F_c\,(e^{f\theta} - 1)$$

Transposing

$$P_1\,(e^{f\theta} - 1) = F + F_c\,(e^{f\theta} - 1)$$

and dividing by the coefficient of P_1,

$$P_1 = \frac{F}{(e^{f\theta} - 1)} + F_c \qquad \text{....(21)}$$

Comparing equation (21) with equation (20) we see that the effect of the centrifugal force on the band of a contracting clutch is to increase the required pull on the free end of the band by an amount equal to the centrifugal force on a section of the band one radian in length. This might have been expected, since the total centrifugal force on the band is $2\,\pi\,F_c$, and if the band

moves radially outward under this force a distance x, then the free end of the band will be moved a distance $2\pi x$. Hence the motion of the free end is 2π times greater than the radial motion, and the force in the direction of motion of the free end 2π times smaller than the radial (centrifugal) force.

Equation (21) is applicable to contracting band clutches at all speeds. A similar analysis may be applied to expanding band clutches, and the resulting equation for the initial pull required is the same as (21), except that the sign of the term F_c is reversed, the centrifugal force in this case adding to the normal pressure, instead of subtracting from it. Therefore, for expanding clutches—

$$P_1 = \frac{F}{e^{f\theta} - 1} - F_c \quad \ldots\ldots\ldots\ldots\ldots\ldots\ldots\ldots\ldots\ldots\ldots\ldots (22)$$

Returning to the examples of a band clutch for a motor developing a torque of 133 pounds-feet, let the band weigh 0.1 pound per inch of length; then

$$F_c = 0.102 \times 0.1 \times 20^2 \times 6^2 = 147 \textit{ pounds}$$

the initial pull becomes

$$P_1 = \frac{266}{3-1} + 147 = 280 \textit{ pounds},$$

and the pull at the anchorage of the band is

$$280 + 266 = 546 \textit{ pounds}.$$

Expanding Band Clutches—Expanding band clutches of the type shown in Fig. 37 require comparatively little pressure to hold them in engagement at high speed, since the centrifugal force on the band presses it against the inside of the clutch drum. The advantage of this fact is doubtful, however, since the greatest torque is produced by the motor—and, consequently, the greatest frictional force required of the clutch—at low motor speed. If in this type of clutch the spring were to act against a sliding cone, which through a connecting linkage acted on the free end of the band, the latter at high speed would not be released from the drum when the sliding cone was withdrawn, owing to the fact that the centrifugal force on the band would then produce the necessary frictional force betwen band and cone to hold the load. Consequently, the operating mechanism must be so arranged that when the sliding sleeve is moved by pressing on the clutch pedal the band is positively released from the drum. The band is made of band steel, faced with leather, and supported by a skeleton drum which can be cast of aluminum, or the band may be made of a ribbed iron casting yieldingly supported

by a bracket. The engaging pressure is furnished by a tension spring, whose one end is anchored to the web of the band supporting drum. In some designs a second spring must be provided to keep the sliding cone in contact with the operating lever, which spring may either surround the clutch shaft and press directly against the cone, or may be anchored to some part of the car frame and draw the clutch pedal in the direction corresponding to clutch engagement.

In another type of band clutch both ends of the band are free and the middle is anchored to a bracket on the driving shaft. In this case one-half of the band is drawn tighter on

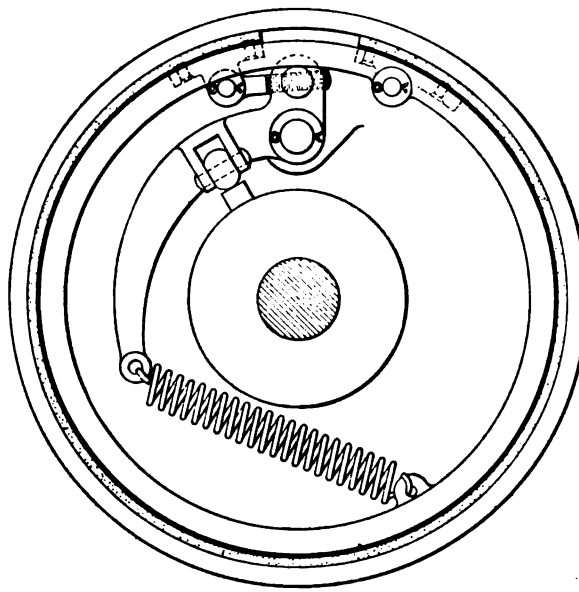

FIG. 37.—EXPANDING BAND CLUTCH.

the drum by the friction between band and drum, and the other half is unwound, as it were. Hence the effects of the friction on the pull or tension in the halves of the band exactly neutralize each other and can be neglected in calculating the frictional force. Let P be the pull exerted on each free end of the band, and suppose that under this pressure the ends move together a distance x. Then, if the band is supposed to be of circular shape, both before and after

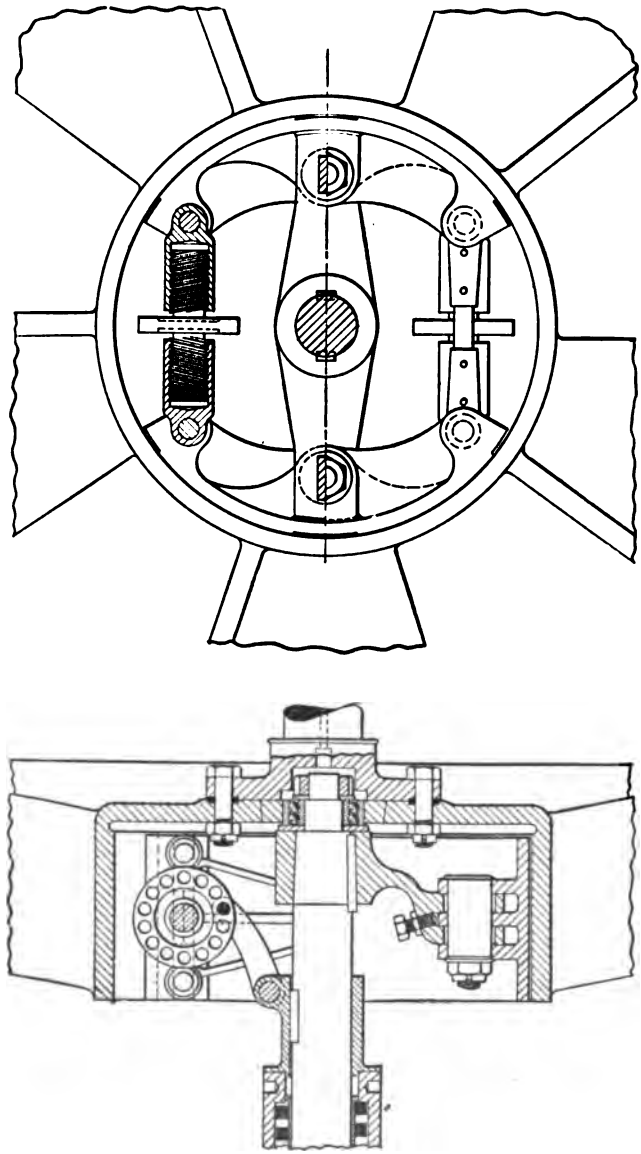

FIG. 38.—METALLURGIQUE EXPANDING BLOCK CLUTCH.

the contraction, the radius will be reduced by $\frac{x}{2\pi}$. Since the ratio of circumferential to radial motion is 2π the ratio of circumferential to radial pressure is $\frac{1}{2\pi}$ and the total normal pressure is $2\pi P$, which when multiplied by the coefficient of friction gives the total frictional force.

Expanding Block Clutches—This type of clutch, which is widely used in stationary work, is rarely found in automobile practice. It consists of a drum and two or more blocks or segments which by means of toggles or right and left hand screws can be expanded against the rim of the drum. The blocks are in driving connection with a spider secured to the clutch shaft. The calculation of such a clutch is very simple. From the arrangement of the mechanism the multiplication of the spring pressure at the friction surface can be readily calculated and the frictional force is then equal to the product of the normal pressure by the friction coefficient. These blocks or segments are often faced with fibre or leather. though they may also have metallic surfaces. The Metallurgique clutch, a typical expanding segment clutch with right and left hand screw operating mechanism, is shown in Fig. 38. In the Mais truck clutch, the clutch surface, instead of being a cylindrical envelope, is corrugated, so as to increase the normal pressure on the frictional surface on the principle of a wedge.

Clutch Shaft Dimensions—The torsional strength of shafts is calculated by means of the formula

$$M = 0.196\, d^3\, S,$$

where M is the torsional moment in pounds-inches, d the diameter of the shaft in inches, and S the safe torsional stress in pounds per square inch. S can be figured at 5,000 pounds per square inch for carbon steel and 7,000 pounds for nickel and chrome-nickel steel. The torsional moment of a four cylinder 4x5 inch engine would be

$$12 \times 133 = 1{,}596 \text{ } \textit{pounds-inches.}$$

Hence

$$0.196\, d^3 \times 5{,}000 = 1{,}596$$

and

$$d = \sqrt[3]{\frac{1596}{0.196 \times 5000}} = 1.18 - \textit{say } 1\tfrac{3}{16} \textit{ inch,}$$

for carbon steel.

Of course, if the shaft is weakened in any way, as by being squared for a coupling, the diameter should be made proportionally heavier. The stress allowed in the shaft seems to be

very low, but a high factor of safety is necessary, since, owing to changes in the coefficient of friction of the clutch facing and adjustment of the spring pressure, the torque transmitting capacity of the clutch may be greatly increased and much greater torques than that of which the engine is capable continuously may be produced by "jamming in" the clutch while the engine is racing, thus withdrawing some of the energy stored up in the flywheel. All other parts of the clutch transmitting the torque of the motor should be calculated on the same basis, allowing a factor of safety of about 10.

In these calculations, as well as in the calculations of other transmission members, unless exceptions are specifically men-

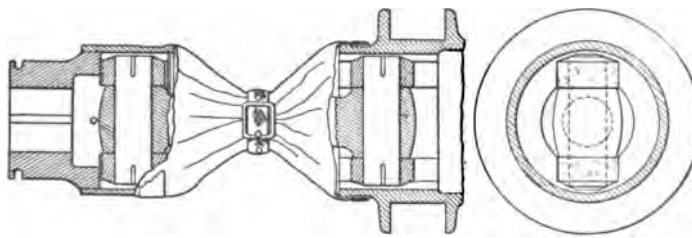

FIG. 39.—BLOCK AND TRUNNION TYPE UNIVERSAL AND SLIP JOINT.

tioned, a torque based upon a brake mean effective pressure of 80 pounds per square inch is to be used. That is to say, the constants of all formulæ to be given will be based on this engine torque, which may be found from Chart I.

Connection Between Clutch and Change Gear—In a cone clutch the torque of the motor is transmitted by the cone and the hollow shaft to which it is secured, and since the cone must move in an axial direction when it is engaged and disengaged, there must of necessity be a slip joint in the transmission line between the clutch and the change gear. The same applies to some other types of clutches, as, for instance, multiple disc clutches in which the inner drum serves also as the presser. Moreover, unless the change gear housing and engine crank case are rigidly secured together, it is very desirable that a double universal joint be interposed between clutch and change gear, so there may be no binding of the bearings of either member when the vehicle frame "weaves" or distorts in consequence of road shocks, and also so as to obviate the necessity of absolute alignment in assembling. A favorite construction of universal and

slip joint in connection with cone clutches is the block and trunnion type illustrated in Fig. 39. The shaft is forged with a transverse hub which is drilled to receive a trunnion. Over this trunnion are slipped two square blocks of steel, adapted to slide lengthwise in slots formed on the inside of the hollow shaft. These slots may be cut in a planer or shaper in a short length of hollow shaft which is flange-bolted to the adjacent transmission part, or the slots may be milled entirely through the wall of the hollow shaft, for a certain distance from the end, and a piece of steel tubing forced over the end of the shaft as far as the slots extend.

In calculating the necessary size of the blocks and trunnions a unit pressure of 1,200 pounds per square inch can be figured

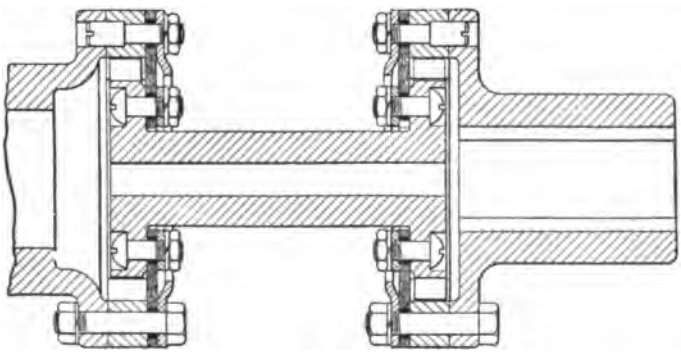

FIG. 40.—INTERNAL AND SPUR GEAR TYPE OF UNIVERSAL AND SLIP JOINT.

on between the blocks and the walls of the slots in which they slide, and a unit pressure of 1,800 to 2,000 pounds per square inch between the trunnions and the blocks. In order to obtain the maximum bearing surface with a given outside diameter of hollow shaft, the blocks are often beveled off on the outside and beveled out on the inside. These blocks are hardened and the hollow shafts case hardened, to reduce wear. To obviate rattling of the intermediate shaft against the ends of the hollow shaft, a spring is sometimes placed between one of the hollow shafts and the intermediate shaft, which takes up the end play. Another method of accomplishing the same result consists in using a standard form of universal joint at one end of the short intermediate shaft and a block and trunnion type of joint at the other. The block and trunnion type of joint must be packed in

grease, and to this end must be provided with a leather boot, as shown in Fig. 39.

Another type of universal and sliding joint employed between clutch and change gear consists of spur and internal gears. A design of this kind is used on the Oldsmobile, and is illustrated in Fig. 40. The intermediate shaft is forged with flanges at both ends which are cut with spur teeth on their circumference. These teeth mesh with the teeth of internal gears bolted respectively to the clutch shaft and a coupling fixed to the change gear driving shaft. Since the two sets of gears do not run together it is not necessary that their teeth should be of any particular form, and substantially square teeth probably are the most advantageous. Leather discs bolted to the sides of the two gears respectively here take the place of the usual leather boots, and at the same time limit the endwise play of the intermediate shaft and thus prevent rattling.

Leather disc universals are also much used between the clutch and transmission. These are discussed in the chapter on Universal joints.

End Thrust Due to Pedal Pressure.—Most modern automobile clutches are so designed that when they are engaged the spring pressure is self-contained. However, when the clutch is disengaged the end thrust due to the pressure on the clutch pedal has to be taken up in some way. The clutch itself is not supported by any structural part, and this thrust may be transmitted either to the engine crankshaft or to the driving shaft of the change speed gear, whichever seems the most convenient and practical in any particular design. Another thing to be considered is the possibility of dismounting the clutch without removing the engine or gear box—especially those clutches with renewable wearing surfaces.

CHAPTER III.

SLIDING CHANGE SPEED GEARS.

Historical—Many different devices have been tried for changing the gear ratio between the motor and the driving wheels of an automobile, and the change gear was long thought to present the most difficult problem in automobile design. Daimler and Benz, the pioneers of the gasoline automobile, both used belts and stepped pulleys in their earliest designs. The Daimler motor was taken up in France by the firm of Panhard & Levassor, and after a few experiments with belts M. Levassor, the engineer of the concern, introduced the sliding pinion change speed gear in combination with the leather faced cone clutch. The idea of meshing toothed gears by shifting them axially was at first ridiculed as crude and unmechanical, but in the end the system, after having undergone a number of important refinements and modifications, proved more satisfactory on the whole than all others, and it is now in almost universal use.

Levassor's change gear is illustrated in Fig. 41. It consists of two parallel shafts mounted in bearings in an aluminum gear box. The first of these shafts, known as the primary shaft, is in driving connection with the clutch. This shaft is squared and carries a set of three toothed gears or pinions, whose common hub has a square hole broached through it to make a sliding fit with the square shaft. On the secondary shaft are carried three other toothed gears, each of such a diameter as to properly mesh with one of the gears on the primary shaft. The gears on both shafts are so spaced that by shifting the primary set corresponding gears on the two shafts can be brought in to mesh successively without interference from the other gears. Shifting of the sliding set is accomplished by means of a hand lever located convenient to the operator, and a suitable connecting linkage. The secondary shaft at its rear end carries a bevel pinion meshing with a bevel gear on a cross shaft or jackshaft, from

which the power is transmitted to the rear wheels by means of side chains.

One disadvantage of Levassor's gear set was that the power was transmitted through a pair of toothed gears—with consequent power loss, noise and wear—even at high car speeds, when there was absolutely no occasion for it, since the speed was not changed by the gearing. This objection was overcome in a change gear brought out some years later by Louis Renault, which differed from Levassor's in that the gears of the two shafts were rolled into mesh instead

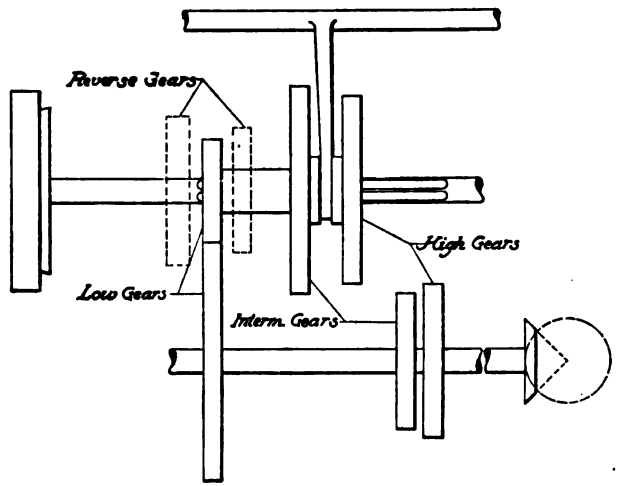

FIG. 41.—SKETCH OF LEVASSOR'S SLIDING CHANGE SPEED GEAR

of being slid into mesh. The primary shaft of this gear set was in two parts, the forward or driving part, and the rearward or driven part, the latter being journaled at its forward end inside the former. The secondary shaft served as a countershaft through which the motion was transmitted for low and intermediate speed and for reversing. For high speed the two parts of the primary shaft were locked together by means of jaw clutches formed integral with gears on the two parts of the primary shaft, which could be slid into engagement. This gave the so-called direct drive, the power being carried directly through the gear set without being transmitted through the toothed gears. The direct drive feature was soon also incorporated in the Levassor type of slid-

ing gear, as shown in Fig. 42. This gear, which is known as the three speed and reverse progressive sliding gear with direct drive on high, was used very extensively for many years, and is still being used to some extent, especially on commercial vehicles.

As the speed capabilities of automobiles increased it became customary to fit change gears giving four forward gear changes and one reverse, so as to enable the operator to run the engine near its most advantageous speed under all road conditions. Now, a four speed gear constructed on either the original Levassor principle or the direct drive principle comes out exceedingly long, as may be seen from Fig. 43, which represents the non-direct type. Not only does this lead to a bulky and heavy gear box, but the shafts, being relatively

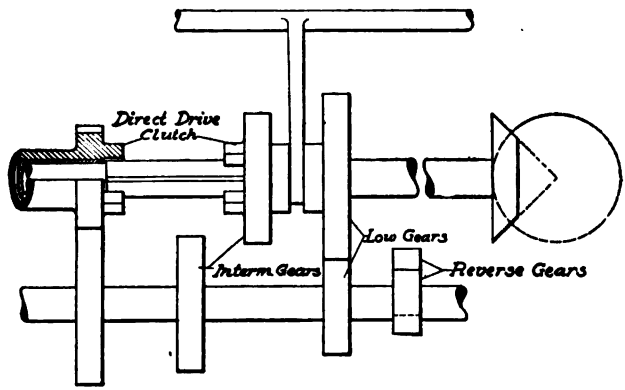

FIG. 42.—SLIDING GEAR WITH DIRECT DRIVE.

long, are likely to be insufficiently rigid and to spring and bend under the thrust on the gear teeth, the gear thus operating noisily and inefficiently. The great length with this construction is mainly due to the fact that the gears on each of the shafts must be spaced relatively far apart so as to avoid interference. This difficulty was first overcome by Wilhelm Maybach, engineer of the Daimler Motor Company, of Cannstadt, Germany, who with a non-direct drive type of sliding gear used two sliding sets. This principle was later also applied to the direct drive type, and proved so popular that at present it is used on pleasure cars almost exclusively, and also largely on commercial vehicles, and not only for four speed gears but for three speed as well.

Three speed and reverse gears usually have two sliding sets and four speed and reverse gears three. The several sliding sets are operated by means of a single lever, convenient to the driver, which lever, in addition to its motion for shifting the gears, has a motion at right angles to the plane of the former motion, for picking up and dropping the different sliding sets. This type of change gear is known as the selective type of sliding gear. It has the advantage over the other, the progressive type, that the driver may change directly from any one gear to any other without passing through intermediate ears, which is not possible with the progressive type of gear.

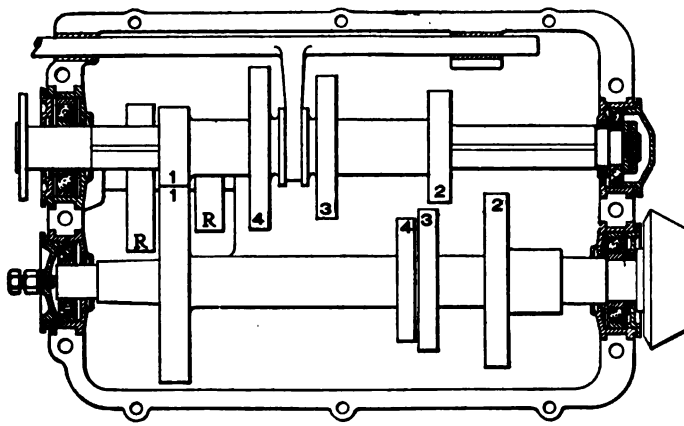

FIG. 43.—PROGRESSIVE TYPE FOUR SPEED AND REVERSE SLIDING GEAR.

A sketch of a four speed selective sliding gear is shown in Fig. 44. By comparing this figure with Fig. 43 the saving in length by the use of the selective principle becomes apparent.

Gear Material—It is absolutely necessary to use high grade materials for the gears of sliding gear sets. Owing to the fact that driving and driven gears are often running at greatly different pitch line velocities when they are meshed, the teeth "clash" together with considerable force, and their ends would soon be battered up if they were made of soft metal. Hardening the gears involves considerable difficulty, because if they are hardened after they are finished they are very likely to warp on being quenched, and hence to run noisily, whereas if they are hardened before being finished they can be finished only by grinding.

The gears may be made of either ordinary low carbon steel (so-called case hardening steel), low carbon nickel or low carbon chrome vanadium steel, all of which steels are case hardened; or they may be made of high carbon chrome nickel or high carbon chrome vanadium steel, gears of these materials having been used both in the natural state and hardened by quenching. The last two materials have exceedingly high elastic limits when properly heat treated, but they are so difficult to forge and machine that gears made of them are very expensive. These materials are fairly hard in the natural state, and gears of them therefore can be used in that state; but such gears wear faster than case hardened gears, and since they are more expensive they are now no longer used, except possibly in exceptional cases. Gears of chrome nickel and chrome vanadium steel with a carbon content of 0.45 per cent., hardened

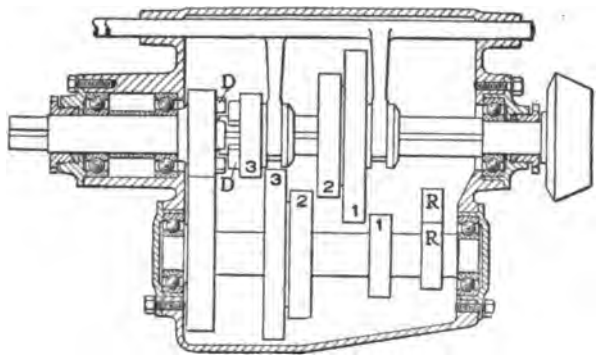

FIG. 44.—SELECTIVE TYPE FOUR SPEED AND REVERSE SLIDING GEAR

through and through, are used on the higher grades of cars. When gears are carbonized for case hardening the carbon is allowed to penetrate to a depth of $\frac{1}{32}$ inch. Following are the standard specifications and heat treatments of steels suitable for sliding gears that have been adopted by the Society of Automobile Engineers:

Specification No. 1020—0.20 per cent. carbon steel. The following composition is desired:

Carbon	0.15% to 0.25% (0.20% desired)
Manganese	0.30% to 0.60% (0.45% desired)
Phosphorus	not over 0.045%
Sulphur	not over 0.05%

This steel forges and machines well and is particularly

suited for case hardening. It has an elastic limit of 35,000 pounds per square inch in the annealed state and as high as 70,000 pounds when cold rolled or cold drawn. For sliding gears this steel should be treated as follows: After forging, machining and cutting the teeth, carbonize at a temperature of between 1,600° and 1,750° Fahr., cool slowly in the carbonizing mixture, reheat to 1,550-1,625° Fahr., quench, reheat to 1,400°-1,450°, quench and draw in hot oil at a temperature of from 300° to 450° Fahr.

Specification No. 2320—3½ per cent. nickel steel. The following composition is desired:

Carbon	0.15% to 0.25% (0.20% desired)
Manganese	0.50% to 0.80% (0.65% desired)
Phosphorus	not over 0.04%
Sulphur	not over 0.045%
Nickel	3.25% to 3.75% (3.50% desired)

The elastic limit of this material in an annealed condition is 45,000 pounds per square inch, with good reduction and elongation. When suitably heat treated the elastic limit may be brought up to 60,000 pounds, and even 70,000 pounds per square inch, with better reduction of area than in the annealed state. This material is carbonized and heat treated as follows: After the gears are cut, carbonize at between 1,600° and 1,750° Fahr., cool slowly in the carbonizing material, reheat to 1,500°-1,550° Fahr., quench; reheat to 1,300°-1,400° Fahr., quench; reheat to 250-500° Fahr. and cool slowly. The last quenching operation must be conducted at the lowest temperature at which the material will harden, which will sometimes be as low as 1,300° Fahr.

Specification No. 3140.—0.40 per cent. carbon, chrome nickel steel. The following composition is desired:

Carbon	0.35% to 0.45% (0.40% desired)
Manganese	0.50% to 0.80% (0.65% desired)
Phosphorus	not over 0.04%
Sulphur	not over 0.045%
Nickel	1.00% to 1.50% (1.25% desired)
Chromium	0.45% to 0.75% (0.60% desired)

This steel contains a sufficient amount of carbon to harden without being carbonized. Heat treatment produces an elastic limit as high as 200,000 pounds per square inch, with good reduction of area and elongation. The steel is difficult to forge and must be kept at a thoroughly plastic heat while being forged, and not hammered or worked after dropping to ordinary forging temperature, as cracking is liable to fol-

low. Since the temperature range within which forging is permissible is small, the steel must be frequently reheated. The heat treatment is as follows: Heat to 1,500°-1,600° Fahr., quench; reheat to 1,450°-1,500° Fahr., quench; reheat to 600°-1,200° Fahr. and cool slowly. This steel cannot be machined unless thoroughly annealed. The desired Brinell hardness for gears is between 430 and 470, the corresponding Shore hardness between 75 and 85.

Specification No. 6120.—0.20 carbon, chrome-vanadium steel. The following composition is desired:

Carbon	0.15% to 0.25% (0.20% desired)
Manganese	0.50% to 0.80% (0.65% desired)
Phosphorus	not over 0.04%
Sulphur	not over 0.04%
Chromium	0.70% to 1.10% (0.90% desired)
Vanadium	not less than 0.12% (0.18% desired)

The treatment of the above steel is as follows: Carbonize at a temperature between 1,600° and 1,750° Fahr.; cool slowly in the carbonizing mixture; reheat to 1,650°-1,750° Fahr., quench; reheat to 1,475°-1,550° Fahr., quench; reheat to 250°-550°, and cool slowly. The heating for the second quench should be conducted at the lowest temperature that will harden the carbonized

Specification No. 6145.—0.45 per cent. carbon chrome-vanadium steel. The following composition is desired:

Carbon	0.40% to 0.50% (0.45% desired)
Manganese	0.50% to 0.80% (0.65% desired)
Phosphorus	not over 0.04%
Sulphur	not over 0.04%
Chromium	0.70% to 1.10% (0.90% desired)
Vanadium	not less than 0.12% (0.18% desired)

This steel hardens without being carbonized and attains an elastic limit of as high as 200,000 lbs. per square inch. The proper treatment for gears is as follows: Heat to 1,525°-1,600° Fahr.; hold at this temperature one-half hour to insure thorough heating; cool slowly; reheat to 1,650°-1,700° Fahr., quench; reheat to 350°-550° Fahr., and cool slowly.

For the gear shafts 0.45 per cent. carbon steel, 3½ per cent. nickel (0.30 per cent. carbon) or 0.30 per cent. carbon chrome nickel steel is used.

Gear Reduction Ratios—With very few exceptions sliding pinion change gears provide either three or four forward speeds, besides one reverse speed. Four speed gear sets are

fitted, as a rule, to the more expensive pleasure cars and to the larger sizes of commercial vehicles manufactured. It is customary to proportion the different gear reductions so they will substantially form a geometrical series. For instance, in a three speed gear the reduction ratio of the intermediate gears is generally about 1.8, and that of the low gears 3.2, which latter figure is substantially the square of 1.8. If the motor is relatively powerful in respect to the weight of the car and the speed to which it is geared on direct drive, then these reduction ratios of the gear set can be made somewhat smaller; in the opposite case they should preferably be somewhat greater.

In four speed gears the reduction ratio of the low gears (first speed set) varies from 3.25 to 4.25, being generally near 4. With a geometrical progression, calling the first speed ratio r, the second speed ratio would be $\left(\sqrt[3]{r}\right)^2$ and the third speed ratio $\sqrt[3]{r}$. There is a tendency, however, to make the reductions of the two intermediate gears a little smaller, the idea being that the speed shall not be too low while driving on the intermediate gears, but the first speed gear must be sufficiently low to provide ample driving torque for all emergencies. The general run of ratios falls within the following limits:

First speed	3.75—4.25
Second speed	2 —2.2
Third speed	1.4 —1.6
Fourth speed	Direct drive.

The reverse gear ratio is generally made somewhat greater than that of the low gear—as great as the design permits.

Arrangement of Gears—Referring to Figs. 42 and 44, it will be seen that in these gears (which represent the modern types) the driving part of the primary shaft carries a pinion which meshes with a gear on the secondary shaft. These two gears remain constantly in mesh, while the rest of the gears are shifted into mesh when it is desired to use them. It will be noticed that the gear on the secondary shaft has about twice the pitch diameter as the driving pinion on the primary shaft, hence the secondary shaft runs at all times at about one-half the speed of the engine. There is an alternate construction in which the constantly meshed set of gears is located at the rear end of the gear box, but this is subject

to the disadvantage that when the direct drive is in operation, which it is a very large proportion of the time the car is in use, the secondary shaft runs at substantially twice engine speed, and the pitch line velocity of the constantly meshed gears is practically twice as great. This arrangement is now nearly obsolete, and with it has passed the practice of entirely disconnecting the primary and secondary shafts from each other when engaging the direct drive.

Form of Gear Teeth—There are two forms of gear teeth in use, the 14½ degree involute and the stub tooth. The latter, which was specially created to meet automobile requirements, is used in the great majority of cases. The involute tooth, shown in Fig. 45 at *A*, is the standard form of tooth for machine cut gearing for ordinary purposes. Its general proportions are given in the Appendix to Volume I. The tooth contact surfaces make an angle of 14½ degrees with a radial plane through the axis of the gear. The stub tooth, illustrated in Fig. 45 at *B*, is not as high as an involute tooth of the same circular pitch, and has a greater contact angle (20 degrees). Rules for the general proportions of stub teeth were also given in the Appendix to Volume I.

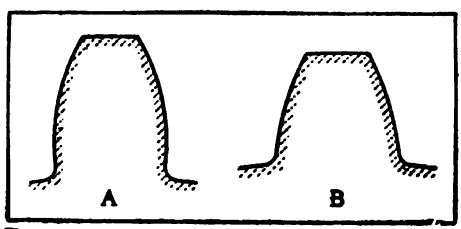

FIG. 45.—INVOLUTE 14½ DEGREES TOOTH AND STUB TOOTH.

Stub tooth gears are much stronger than involute tooth gears of the same circular pitch, and that is the reason they have supplanted the latter. It is sometimes urged against the stub tooth gear that the radial thrust between centres of shafts, which is proportional to the tangent of the pressure angle, is somewhat greater with the stub tooth, but since the radial thrust is only a fraction of the whole gear load on the shafts, this objection is not a very serious one. Another special form of tooth, intended to have some of the same advantages as the stub tooth, is known as the "long addendum." While the total working height is the same as that of the standard involute tooth, seven-tenths of this height is above the pitch circle and only three-tenths below it in the pinion; three-tenths above and seven-tenths below it in the gear.

Calculation of Gears—In determining the necessary dimensions of change speed gears it is advisable to calculate the engine torque on the basis of 65 pounds per square inch brake m. e. p., because the permissible stress in the gear teeth decreases

TABLE IV—ALLOWABLE UNIT STRESS IN CHROME NICKEL AND CHROME VANADIUM STEEL GEAR TEETH, HARDENED ALL THROUGH.

Pitch Line Velocity. (Ft. P. M.)	Allowable Stress. (Lbs. P. Sq. In.)
750	60,000
900	53,000
1050	47,000
1200	42,000
1350	38,000
1500	34,000
1650	30,000
1800	27,000

In the above two tables the pitch line velocity is based on a piston speed of 1,500 feet per minute.

For the constantly meshed pair of gears the stress in the teeth should be taken 15 per cent. less than for the intermittently meshed gears.

In calculating the face of the gear it is to be remembered that the engaging edges of the teeth have to be chamfered in order to insure positive meshing, and this chamfering necessarily somewhat reduces the effective width of the gear face. In progressive sliding gears some of the gears are chamfered on both sides, while in selective sliding gears the gears are chamfered on one side only. The loss in the effective width of the face amounts to about $\frac{1}{8}$ inch for each chamfer. Another thing that deserves consideration is that, after the gear shifting linkage has become somewhat worn, there is a possibility that when the gears are meshed by the operator they will not be accurately opposite each other, with the result that some of the face width will be ineffective, and it is well to also allow $\frac{1}{8}$ inch for inaccurate meshing of the sliding gears. This makes a total allowance, for chamfer and inaccurate meshing, of $\frac{1}{8}$ inch for sliding gears chamfered on one side only and $\frac{1}{4}$ inch for sliding gears chamfered on both sides. If it is desired to make the gears of carbon steel, case hardened, the stresses in the teeth must be taken somewhat lower than the allowable stresses in alloy steel case hardened, for the same pitch line velocity.

Application of Formula.—We will now calculate the dimensions of a change speed gear for a four cylinder 4x5 inch motor, the gear to be of the three speed selective type. The driving pinion would have a pitch diameter of

$$0.6 \times 5 = 3 \textit{ inches.}$$

We will use gears with 6-8 pitch teeth, hence the pinion will

have 18 teeth. We found that in three speed gears the low speed reduction is usually about 3.2, and it is customary to make the reduction ratio of the constantly meshed set of gears the same as that of the low gear set. Hence the reduction ratio of either set should be about

$$\sqrt{3.2} = 1.8 \text{ } (approximately),$$

and the number of teeth for the driven member of the constantly meshed set should be

$$1.8 \times 18 = 32 \text{ } (approximately).$$

The low gear set should have the same number of teeth as the constantly meshed set, and the intermediate gear set should both have an equal number of teeth, since the constantly meshed set gives the full reduction (1.8) desired for the intermediate speed. Since the sum of the numbers of teeth must be the same for each set, each gear of the intermediate speed set must have

$$\frac{18 + 32}{2} = 25 \text{ } teeth.$$

The torque of the motor, on the basis of 65 pounds per square inch brake m. e. p. is (Equation 1):

$$\frac{4 \times 5 \times 4 \times 4 \times 65}{192} = 108 \text{ } pounds\text{-}feet$$

The pinion of the constantly meshed set has a pitch radius of 1½ inches, hence the tangential force on the pitch circle is

$$\frac{108 \times 12}{1\frac{1}{2}} = 864 \text{ } pounds.$$

At 1,500 feet piston speed the pitch line velocity is

$$\frac{1.5\pi}{5} \times 1500 = 1413 \text{ } ft.\ p.\ m.$$

We will assume that the gears are to be made from low carbon alloy steel and to be case hardened, and from Table III we see that at this pitch line velocity the permissible stress is

$$16{,}800 \text{ } pounds - 15 \text{ } per\ cent. = 14{,}300 \text{ } pounds.$$

From Table II we find the value of the constant s for an 18 tooth 6-8 pitch gear to be 0.068. Hence, according to equation (24), the necessary face width is

$$\frac{864}{14{,}300 \times 0.068} = 0.888 — say\ \tfrac{7}{8} \text{ } inch.$$

The tangential force on the pitch line of the intermediate gears is greater than that on the pitch line of the constantly meshed set in the proportion of the number of teeth of those members of the constantly meshed and the intermediate sets which are secured to the secondary shaft. In the present case the force is

$$864 \times \frac{32}{25} = 1{,}106 \textit{ pounds.}$$

The pitch line velocity of this set at 1,500 feet piston speed per minute is

$$1{,}413 \times \frac{25}{32} = 1{,}104 \textit{ ft. p. m.}$$

At this speed the allowable stress in the teeth (see Table III) is 23,000 pounds per square inch. The value of constant s for 25 teeth of 6-8 pitch is 0.075. Hence the effective width of the face should be

$$\frac{1106}{23{,}000 \times 0.075} = 0.641 \textit{ inch,}$$

and the total width of face

$$0.641 + 0.125 = 0.766 \text{ inch—say } \tfrac{13}{16} \text{ inch.}$$

For the low gear set the pitch line pressure figures out to 1,536 pounds, and the pitch line velocity to 530 ft. p. m. From Table III we find the allowable stress in the teeth to be 29,000 pounds per square inch, and the value of constant s for 18 teeth is 0.068. Hence the total width of face of the low gear should be

$$\frac{1536}{29{,}000 \times 0.068} + 0.125 = 0.905 \textit{—say } 1\tfrac{1}{16} \textit{ inch.}$$

It will be seen that the widths of face of the three gears come out almost the same, and, as a matter of fact, in many three speed sliding gears all of the gears are made of the same face width. Some designers simplify their calculations by merely calculating the required width of face for the constantly meshed set and making all other gears of the same width of face.

In practically every case the sliding member of the low gear set serves also to give the reverse, hence the face width of the reverse pinions is fixed by the face width of the low speed gears

Pressure on Bearings—The earlier change gears of the sliding type were fitted with plain bearings, but anti-friction bearings present such important advantages that they are now almost invariably used in this part of a motor car, radial ball bearings being used in the majority of gear boxes, and roller and cup and cone ball bearings in some instances. The bearings have considerable influence on the design of the case, and in order that the proper sizes may be selected the gear loads on them have to be accurately calculated.

In Fig. 46 is shown a diagram of a pair of gear teeth in mesh. We will assume the teeth to be of stub form and their contacting surfaces to make an angle of 20 degrees with the plane through the axes of the two shafts. The pressure be-

tween the two teeth, which is represented by the line $A\ D$ is normal to the contact surface. On the other hand, the tangential load on the gear, which is represented by the line $A\ C$, is normal to the plane of the axes and, therefore, makes an angle of 20 degrees with the tooth pressure $A\ D$. In fact, the tooth pressure $A\ D$ may be resolved into two components: one, $A\ C$, normal to the plane of the gear axes and tangential to the pitch circles, which causes the driven gear to turn, and the other, $A\ B$, in the plane of the gear axes, which tends to force the gear shafts apart.

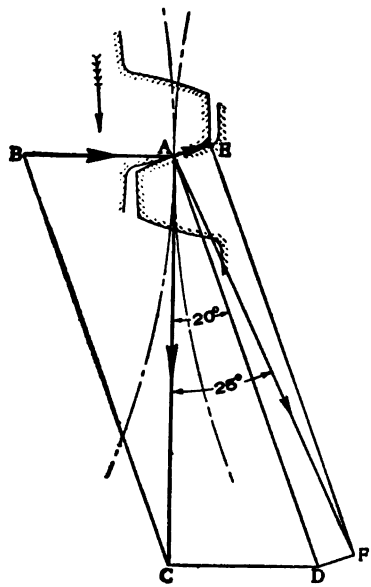

FIG. 46.—COMPOSITION OF GEAR TOOTH REACTION.

Let T be the torque transmitted by the driving gear and r its pitch radius, then the tangential force is

$$A\ C = \frac{T \times 12}{r},$$

and the tooth pressure is

$$A\ D = \frac{T \times 12}{r \times \cos 20^\circ},$$

There is, however, another factor to be taken into account, namely, the friction of the teeth as they move over each other.

When the teeth first come together their outer ends touch each other, and they partly slide and partly roll over each other until they are in full mesh. This frictional force is in the plane of the contact surface and is represented in the diagram by *A E*. The resultant of this frictional force and the normal pressure on the tooth surfaces is represented by *A F*. The friction angle *D A F* may be taken at 5 degrees, which will make the angle between the tangential force and the resultant of the tangential force, the radial bearing pressure and the frictional force on the teeth, 25 degrees. Neglecting the fact that *D F* is not quite in line with *C D*, we may write

$$A\,F = \frac{T \times 12}{r \times \cos 25^\circ} \qquad \ldots\ldots\ldots\ldots\ldots\ldots\ldots\ldots\ldots\ldots\ldots\ldots (25)$$

Equation (25) gives the resultant reaction at the tooth surface of any pair of meshing gears, if *T* is made equal to the torque

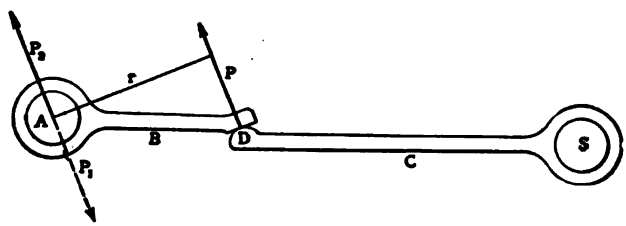

FIG. 47.

of the driving member and *r* equal to its pitch radius. It is now to be shown what bearing pressure results from this tooth reaction.

In Fig. 47, *A* represents the shaft of the driving pinion which has a torque *T* impressed upon it at some point in front of the bearing. This shaft is provided with a lever arm *B*, representing a portion of the driving pinion, which lever presses against the end of another lever *C*, similarly mounted upon the secondary shaft. The contact surfaces of the two lever arms make an angle of 25 degrees with the plane of the axes of rotation, so that the pressure between them makes an angle of 25 degrees with a tangent to the circles described by the centres of the contact surfaces. Now, the reaction of lever *C* on lever *B* produces a moment $P \times r$ around the axis of primary gear shaft *A*. The principle that action and reaction are equal and opposite applies

to moments the same as it does to forces, and the reaction of the bearing on shaft A tends to turn lever B around the centre line of contact D, with the same torque, but in the opposite direction, as the contact pressure P tends to turn the arm around the axis of shaft A. Hence P_1 represents the reaction of the bearing on shaft A and P_2 the pressure of shaft A on the bearing.

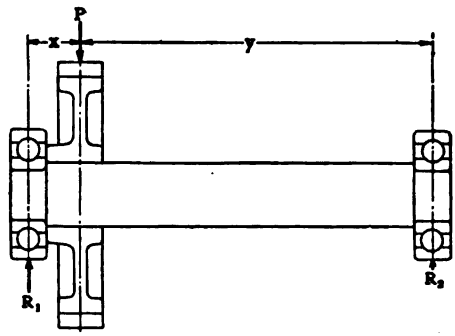

FIG. 48.—DISTRIBUTION OF TOOTH PRESSURE BETWEEN BEARINGS.

Each of the gears is supported on two bearings, these bearings being on opposite sides of the gear respectively, and the bearing pressure is distributed between them in a certain proportion which we shall investigate presently. The constantly meshed pinion in many gears is an exception to this rule, since it overhangs its bearing support. From the above we see that the pressure on the bearings supporting any gear is equal to the resultant tooth reaction, and in direction parallel to it. Another thing to be observed is that the pressures on the shafts of two meshing gears due to the pressure between the teeth are equal but in opposite directions. This is easily seen, since the pressure of the driving gear teeth against the driven gear teeth is equal to the reaction of the driven gear teeth, but in the opposite direction.

Next it becomes necessary to determine the division of the bearing pressure due to the tooth reaction, between the two bearings supporting any gear. The shaft forms a beam supported at both ends, with a concentrated load at the centre of the gear. Referring to Fig. 48, let R_1 and R_2 be the reactions at the supports, or loads on the bearings; P the total bearing load due to one pair of gears; x, the distance of the centre of the gear from the centre of the left hand bearing and y the distance from the centre of the right hand bearing.

Then, taking moments around the centre plane of the gear

$$R_1 x = R_2 y$$

and

$$R_1 + R_2 = P$$
$$R_1 = P - R_2$$
$$(P - R_2)\,x = R_2 y$$
$$P x = R_2 (x + y)$$
$$R_2 = P \frac{x}{x + y}$$
$$R_1 = P - P \frac{x}{x + y} = P \frac{y}{x + y}$$

Except when the direct drive is being used, two pairs of gears are in mesh and transmitting power simultaneously, viz.,

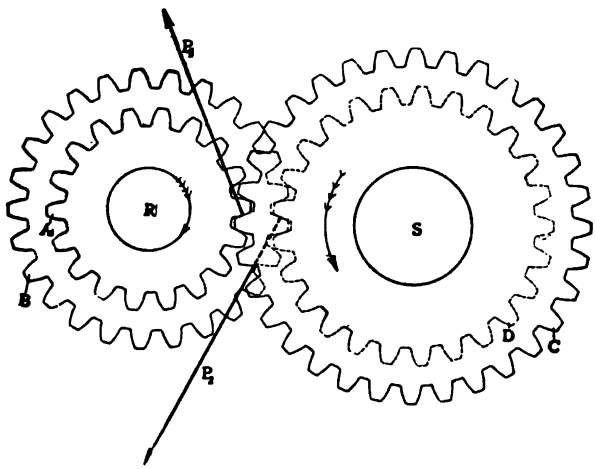

FIG. 49.—CONSTANTLY MESHED AND INTERMEDIATE SPEED GEARS (SEEN FROM ENGINE END.)

the constantly meshed pair and one of the other pairs. However, the bearing pressures due to these two pairs of gears are not in the same direction, and therefore cannot be added together directly, but must be added by means of the parallelogram of forces. This may be seen from Fig. 49, which is a front view of the constantly meshed and intermediate speed pairs of gears. In this figure, P_1 represents the reaction of the contsantly meshed gear C on the constantly meshed pinion A, and P_2 the pressure of the intermediate pinion D on the intermediate speed gear B. The loads on the bearings of the primary shaft R are equal and parallel to P_1 and P_2, while the loads on the bearings

of the secondary shaft are equal and parallel to P_1 and P_2, but oppositely directed. All of these forces make an angle of 25 degrees with the vertical.

Therefore, in order to determine the total load on the different bearings of the gear set corresponding to any particular speed or gear, we first calculate the bearing load due to one pair of gears, then find the proportion of this on each bearing; next

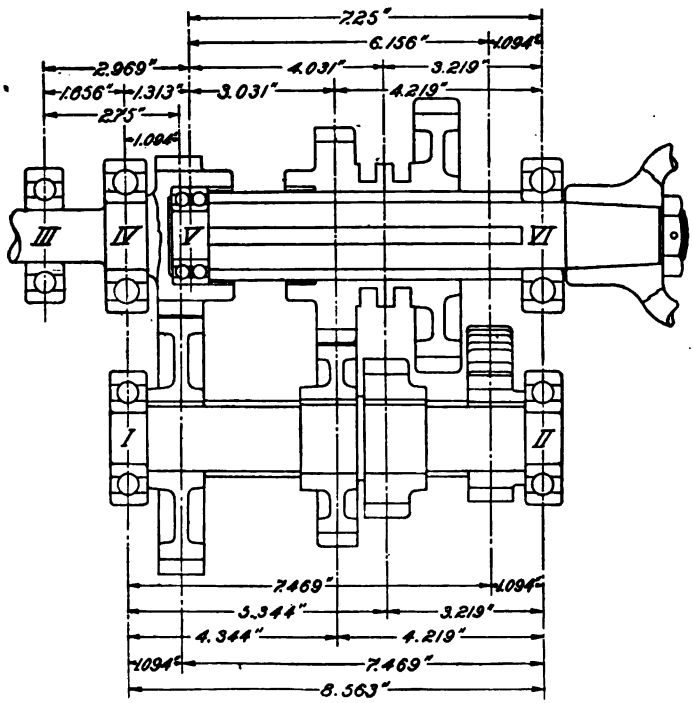

FIG. 50.—LAYOUT OF GEARSET UNDER CALCULATION.

we determine the bearing load due to the other pair of gears, then find the proportion of this on each bearing and finally add the two loads on each bearing together by means of the parallelogram of forces, which can be done either graphically or trigonometrically.

We will now carry this calculation through for the gear set whose gear dimensions were calculated in the foregoing. This

gear with its bearings is laid out in Fig. 50. The tangential forces on the pitch circles we found to be:

864 pounds on the constantly meshed gears;
1,106 pounds on the intermediate gears;
1,536 pounds on the low speed gears,

and if we assume that the reverse pinion has 14 teeth, it is

1,975 pounds on the reverse gears.

Since the bearing loads are equal to

$$\frac{\textit{Tangential Force}}{\cos 25\ \textit{degrees}},$$

and the cosine of 25 degrees is 0.906, we have for the bearing loads due to these tangential forces:

953 pounds due to the constantly meshed gears;
1,222 pounds due to the intermediate gears;
1,693 pounds due to the low speed gears;
2,180 pounds due to the reverse gears.

Now, assume the intermediate pair of gears to be in operation. The load on bearing I due to the tooth pressure of the constantly meshed gears is

$$953 \times \frac{7.469}{8.563} = 832\ \textit{pounds}.$$

That on bearing II due to this pressure is

$$953 - 832 = 121\ \textit{pounds}.$$

The load on bearing I due to the tooth pressure of the intermediate gears is

$$1{,}222 \times \frac{4.219}{8.563} = 602\ \textit{pounds}.$$

That on bearing II due to this pressure is

$$1{,}222 - 602 = 620\ \textit{pounds}.$$

Adding the two loads on each bearing graphically, as shown in Fig. 51, we find the loads on bearings I and II to be 642 and 550 pounds, respectively. The directions of these loads are as indicated by the arrows, the gear being looked at from the front.

The load on bearing V due to the tooth pressure of the intermediate gears is

$$1{,}222 \times \frac{4.219}{7.25} = 708\ \textit{pounds}.$$

The load on bearing VI due to the tooth pressure on the intermediate gears is

$$1{,}222 - 708 = 514\ \textit{pounds}.$$

The load on bearing IV due to the tooth pressure on the intermediate gears is

$$708 \times \frac{2.969}{1.656} = 1{,}271 \textit{ pounds.}$$

The load on bearing III due to the tooth pressure on the intermediate gears is

$$1{,}271 - 708 = 563 \textit{ pounds.}$$

The load on bearing III is opposite in direction to the load on bearing IV.

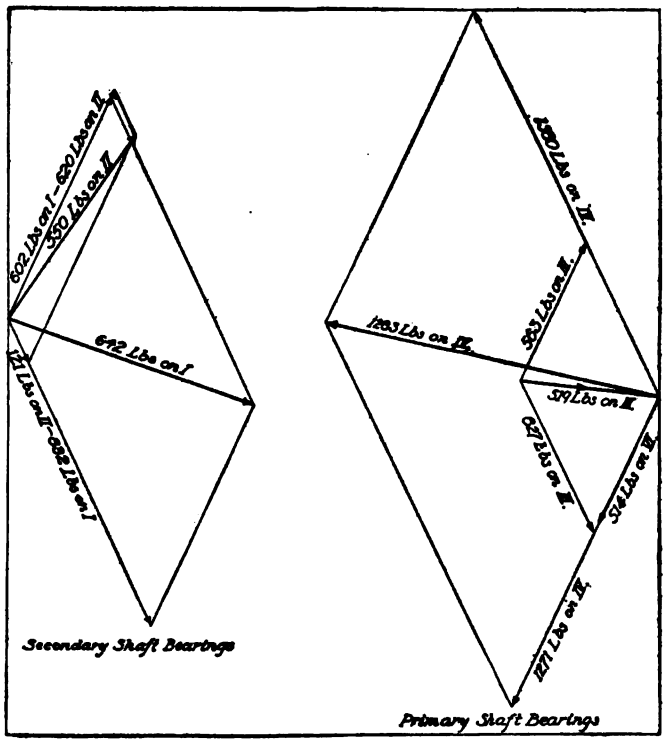

FIG. 51.—BEARING LOADS FOR INTERMEDIATE GEAR OPERATION

The load on bearing IV due to the tooth pressure on the constantly meshed gears is

$$953 \times \frac{2.75}{1.656} = 1{,}580 \textit{ pounds.}$$

The load on bearing III due to the tooth pressure on the constantly meshed gears is

$$1{,}580 - 953 = 627 \textit{ pounds.}$$

The loads on bearings III and IV while the intermediate gear is in operation are added together graphically in the right

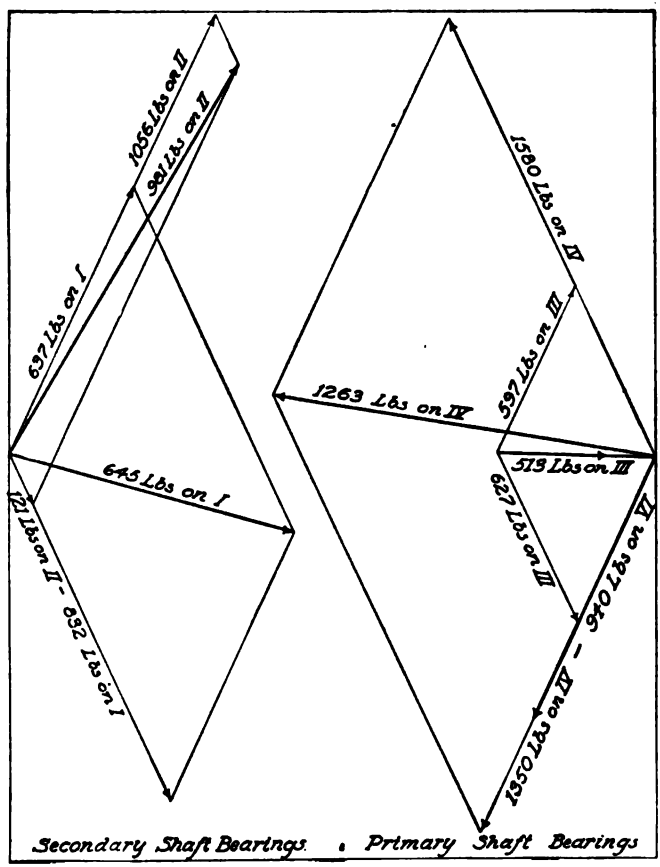

FIG. 52.—BEARING LOADS FOR LOW GEAR OPERATION.

hand diagram in Fig 51, and the magnitude and direction of the load on bearing VI are also shown.

When the low gears are in mesh the bearing loads due to the tooth pressure on the constantly meshed pair of gears will be the same as when the intermediate gears are in mesh, which

loads we have already found. The load on bearing I due to the tooth pressure on the low speed gears is

$$1{,}693 \times \frac{3.219}{8.563} = 637 \textit{ pounds.}$$

The load on bearing II due to the tooth pressure on the low speed gears is

$$1{,}693 - 637 = 1{,}056 \textit{ pounds.}$$

Adding the two forces on each bearing graphically, as in Fig. 52, we find the loads on the secondary shaft bearings for low

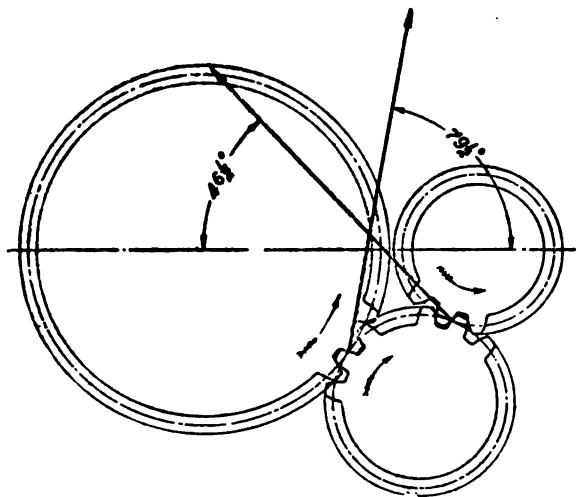

FIG. 53.—MAGNITUDE AND DIRECTION OF TOOTH PRESSURE ON REVERSE GEARS.

gear operation to be 645 pounds on bearing I and 981 pounds on bearing II.

The load on bearing V due to the tooth pressure on the low speed gears is

$$1{,}693 \times \frac{3.219}{7.25} = 753 \textit{ pounds.}$$

The load on bearing VI due to the tooth pressure on the low speed gears is

$$1{,}693 - 753 = 940 \textit{ pounds.}$$

The load on bearing IV due to the tooth pressure on the low speed gears is

$$753 \times \frac{2.969}{1.656} = 1{,}350 \textit{ pounds.}$$

The load on bearing III due to the tooth pressure on the low speed gears is

$$1{,}350 - 753 = 597 \textit{ pounds.}$$

The loads on the bearings of the primary shaft corresponding to low gear operation are added graphically in the right hand diagram in Fig. 52, and we find that the load on IV is 1,263 pounds and on III, 513 pounds.

The direction of the tooth pressures on the reverse gear and

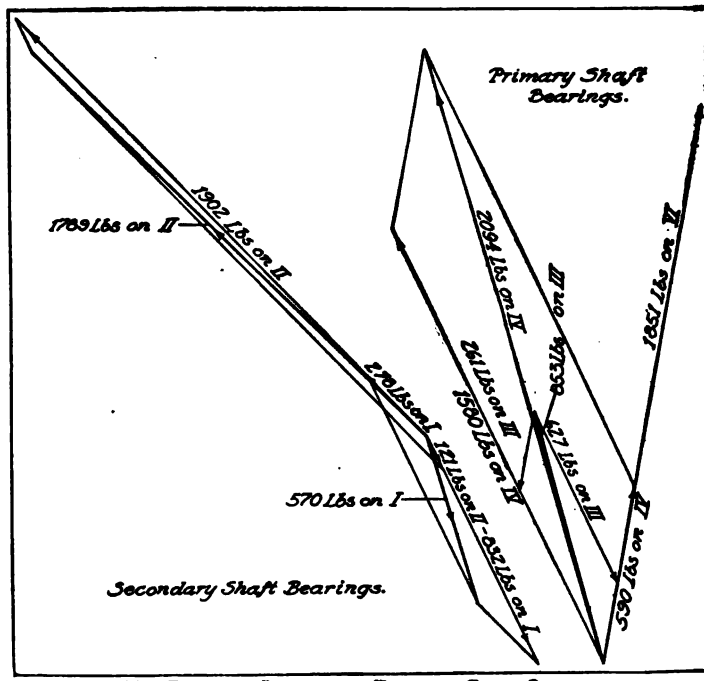

FIG. 54.—BEARING LOADS FOR REVERSE GEAR OPERATION.

pinion may be found graphically from Fig. 53. It is seen that the pressure of the idler gear on the reverse gear makes an angle of 10½ degrees with the vertical, and the reaction of the idler gear teeth on the teeth of the reverse pinion makes an angle of 46½ degrees with the horizontal.

The load on bearing I due to the tooth pressure between the reverse pinion and idler is

$$2{,}180 \times \frac{1\,094}{8.563} = 278 \textit{ pounds.}$$

The load on bearing II due to the tooth pressure between the reverse pinion and idler is

$$2{,}180 - 278 = 1{,}902 \textit{ pounds.}$$

The load on bearing VI due to the tooth pressure between the reverse gear and idler is

$$2{,}180 \times \frac{6.156}{7.25} = 1{,}851 \textit{ pounds.}$$

The load on bearing V due to the tooth pressure between the reverse gear and idler is

$$2{,}180 - 1{,}851 = 329 \textit{ pounds.}$$

The load on bearing IV due to the tooth pressure between the reverse gear and the idler is

$$329 \times \frac{2.969}{1.656} = 590 \textit{ pounds.}$$

The load on bearing III due to the tooth pressure between the reverse gear and the idler is

$$590 - 329 = 261 \textit{ pounds.}$$

Adding the two loads on each bearing graphically (see Fig. 54) we find the loads on bearings I and II to be 570 pounds and 1,789 pounds, respectively, and the loads on bearings III and IV, 627 pounds and 2,094, respectively.

The following table shows at a glance the load on each bearing for each speed:

Bearing.	I.	II.	III.	IV.	V.	VI.
Reverse	570	1789	627	2094	329	1851
Low gear	645	981	513	1263	753	940
Intermediate gear	642	550	519	1263	708	514
High gear	...	...	...	...	...	...

Bearing Load Due to Bevel Gears—Cars fitted with side chain drive have a bevel gear set enclosed in the rear portion of the change gear box, the bevel pinion being keyed to the rear end of the primary shaft. Of course, the tooth reaction of the bevel gears throws considerable load on bearing *VI*, and this must be taken into account. In very powerful cars the bevel pinion is sometimes located between ball bearings on opposite sides of it, but the more common arrangement is to have only a single large radial ball bearing directly back of the bevel pinion. We will assume that in the change gear under calculation the above arrangement is used and that the ratio of the bevel gear set is 3 to 1. We will further assume that the pinion has eighteen teeth of 6 pitch and the gear fifty-four. This makes the maximum pitch diameter of the pinion 3 inches and the pitch angle such

that its tangent is 0.333, viz., 18° 26′. If the bevel pinion has a face of 1⅜ inches, then the mean pitch diameter is

$$3 - (1\tfrac{3}{8} \times \sin 18° 26') =$$
$$3 - (1\tfrac{3}{8} \times 0.316) = 2.567 \textit{ inches},$$

and the mean pitch radius, 1.283 inches. Since the motor develops a torque of 108 pounds-feet, the tangential force on the gear teeth,

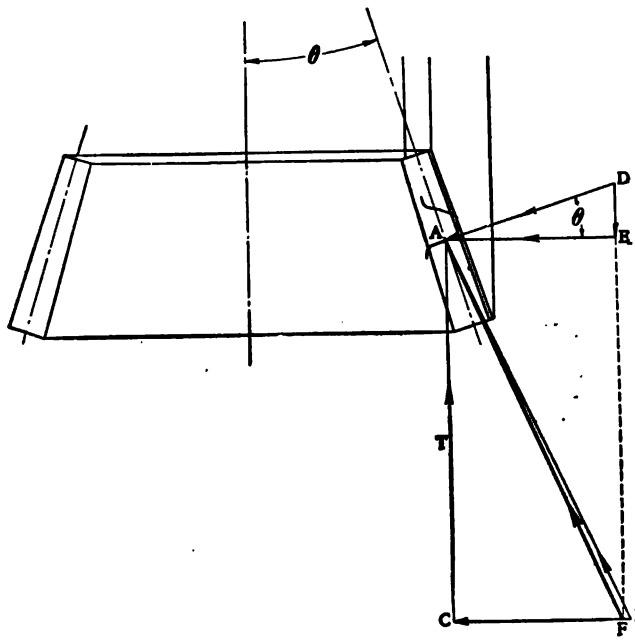

FIG. 55.—TOOTH REACTION IN BEVEL GEARS.

figured as though it was concentrated at the middle of the face length, is

$$\frac{108 \times 12}{1.283} = 1{,}010 \textit{ pounds}.$$

The tooth reaction makes an angle of 20 degrees with the tangential force, hence its value is

$$\frac{1{,}010}{0.94} = 1{,}074 \textit{ pounds}.$$

Now, in a bevel gear the tooth reaction is not in a plane perpendicular to the axis of the gear, and for this reason the bearing

pressure is not equal to the tooth reaction, as in the case of a spur gear. We have to resolve the tooth reaction into two components, one in a plane perpendicular to the gear axis, which is equal and parallel to the load of the shaft supporting bearings, and the other in a direction parallel to the gear axis, which is equal to the end thrust. This requires three successive steps.

In Fig. 55, $A\ B$ represents the normal pressure on the tooth contact surfaces. We first resolve this into a component $A\ C$ in a vertical plane perpendicular to the gear axis, and a component $C\ B$ in a horizontal plane through the axis of the gear and at right angles to the element of the gear tooth surface on which the tooth pressure comes. $A\ D$ represents this latter component both in direction and magnitude.

$$A\ D = C\ B = A\ C\ tan\ 20° = T\ tan\ 20°.$$

The latter may be resolved again into a component $A\ E$ perpendicular to the gear axis and a component $D\ E$ parallel to the gear axis.

$$A\ E = A\ D\ cos\ \theta = T\ tan\ 20°\ cos\ \theta$$

$$D\ E = A\ D\ sin\ \theta = T\ tan\ 20°\ sin\ \theta \quad \ldots\ldots\ldots\ldots\ldots\ldots\ldots\ldots (26$$

$D\ E$ represents the end thrust of the bevel pinion which is usually taken up on the radial ball bearing, though some designers provide a special thrust bearing, or use a combined radial and thrust bearing at this point. This equation is general in its nature, applying to all 14½ degree involute gears; while for stub tooth bevel gears tan 25° should be substituted for tan 20°.

The radial bearing load is equal to the resultant of $A\ C$ and $A\ E$, which is

$$\sqrt{T^2 + (T\ tan\ 20°\ cos\ \theta)^2} \quad \ldots\ldots\ldots\ldots\ldots\ldots\ldots\ldots\ldots\ldots\ldots\ldots (27$$

In our example T = 1,010 pounds. The tangent of 20° is equal to 0.364, the cosine of θ (18° 25′) is 0.949 and the sine of θ, 0.316. Substituting these values in equations (26) and (27) we find the end thrust to be

$$1{,}010 \times 0.364 \times 0.316 = 116.2\ \textit{pounds},$$

and the radial bearing load

$$\sqrt{1{,}010^2 + (1{,}010 \times 0.364 \times 0.949)^2} = 1{,}051\ \textit{pounds}.$$

The arrow heads in Fig. 55 indicate the direction of the reaction of the bevel gear teeth on the bevel pinion teeth and of its components, and the resultant radial bearing pressure is in the direction of $A\ F$, which in this case makes an angle of 23½ degrees with the vertical.

Like the constantly meshed pinion, the bevel pinion overhangs its bearing. From the centre of the rear ball bearing to the centre

of the bevel pinion would be about 1¼ inches, and since the distance between centres of the two bearings of the bevel pinion shaft is 7¼ inches, we have for the load on bearing *VI* due to the tooth reaction on the bevel pinion:

$$1{,}051 \times \frac{8\frac{1}{4}}{7\frac{1}{4}} = 1{,}232 \textit{ pounds},$$

and the load on bearing *V* due to the tooth reaction on the bevel pinion,

$$1232 - 1051 = 181 \textit{ pounds}.$$

When the direct drive is employed these are the only loads on bearings *V* and *VI*, but when either of the lower gears or the reverse is in mesh the loads on bearings *V* and *VI* due to the bevel pinion tooth pressure are multiplied by the reduction factor of the particular gear, and there is in addition the load due to the reduction gears on bearings *V* and *VI* which must be combined with the loads due to the bevel gears by means of the parallelogram of forces. For bearing *VI* this is done in Fig. 56, the values of the loads on *VI* shown in Figs. 51, 52 and 54 being used, and the value of the load due to the bevel gears represented in Fig. 55, multiplied by the reduction factor of the particular gear combination. It will be seen that the bearing loads due to the bevel and spur gears respectively partly neutralize each other, and that with a gear of this kind the load on the rear bearing of the primary shaft is greatest when the low gear is in operation. The tooth pressure of the bevel gears has little influence on the load on bearing *V* and its effect may be neglected.

Sizes of Bearings—Manufacturers of ball bearings issue tables of load capacities with the aid of which the proper size of bearing for each point can be determined. These load capacities are the loads the bearing will stand under continuous running at normal speed. Now, it will be seen from the table of bearing loads above given that the loads on all the bearings except *I* and *V* are a maximum when the reverse gear is in operation, and these maximum loads in most instances are far greater than the loads corresponding to the other gear combinations. It will be remembered that the bearing loads were calculated on the basis of full engine power, and it practically never happens that the engine works at full load while the reverse gear is being used. The reverse gear is made extremely low for the sake of safety in backing, and not because an unusually large torque is needed. Hence the calculated bearing loads for the reverse gear never obtain in practice, and they may be neglected when selecting the proper size of bear-

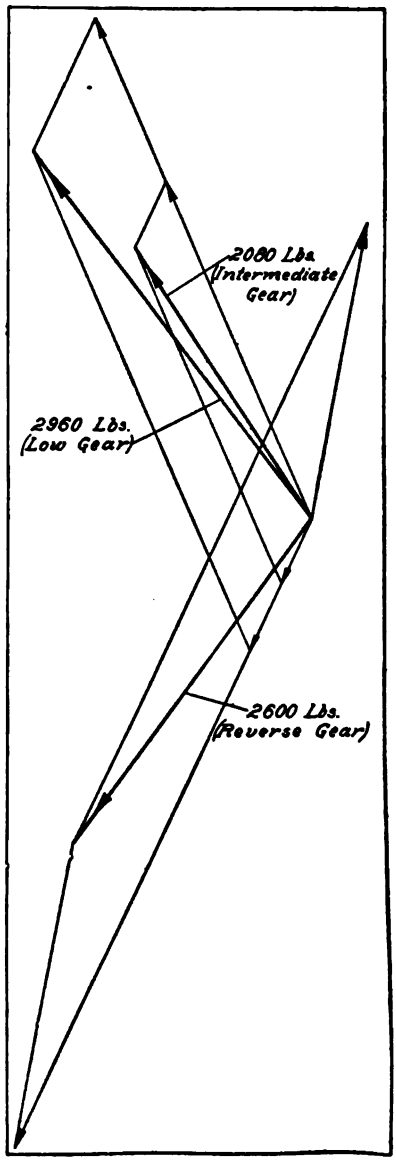

FIG. 56.—LOADS ON PRIMARY SHAFT REAR BEARING (VI) WHEN CARRYING A BEVEL PINION.

ings, though it is well to make sure that the calculated load on bearing *II* does not exceed the rated load by more than 100 per cent.

Various constructional and operative considerations often influence the choice of bearing sizes. Thus, although there is a very considerable difference between the maximum loads on *I* and *II*, these bearings are often chosen of the same size; for one reason, because it simplifies the boring of the bearing holes in the gear case, since the holes at opposite ends can be bored in one operation. Another reason is to be found in the advantage there is in reducing the number of different parts in a car, due to the fact that a smaller stock of repair parts will suffice. When it is thus decided to use the same size of bearing at both ends of the secondary shaft the size of bearing selected should have a rated load capacity intermediate between the maximum loads on the two bearings for forward running. Thus in our example the loads are 550, 642, 645 and 981 pounds, and the No. 306 bearing would probably be selected which has a rated capacity of 860 pounds. To give a general rule, the bearings should be selected to have

a rated load capacity of from 75 to 125 per cent. of the calculated maximum gear loads due to other than the reverse gear, depending upon the general quality of construction.

Intermediate Bearings—In the construction Fig. 50 the most heavily loaded bearing is *IV*, which is due to the fact that the constantly meshed pinion overhangs this bearing. Although the primary driving shaft is supported in two bearings, the load due to the tooth pressure is not divided between these bearings, as might possibly be supposed. The gear overhangs the bearings and the load on bearing *IV* from the constantly meshed gears alone is equal to the tooth pressure on the constantly meshed pinion plus the load on bearing *III*. The load on bearing *IV* resulting from that on bearing *V* is also nearly twice the latter. The conditions are somewhat more favorable when a plain bearing is used at *V*, extending a considerable distance into the primary driving shaft, so that the middle of its length lies substantially in the plane of bearing *IV*, in which case the load on *V* is transferred directly to *IV*. In the case of unit power plants and designs of clutches requiring no slip joint in the clutch shaft, it is advantageous to use only a single bearing on the primary driving shaft, as the load on the bearing will then be less than that on *IV* in Fig. 50.

In large gear boxes the constantly meshed pinion is sometimes supported in two bearings, as shown in Fig. 57, one on either side, the inside bearing being carried on a pedestal or in a partition wall in the case. The loads are then divided between the two bearings in the inverse proportion of the centre distances. Bearing *I* may also be placed inside the constantly meshed gear, causing the latter to overhang, an arrangement that naturally suggests itself when the constantly meshed pinion is carried in two bearings. It increases the load on bearing *I* and reduces that on bearing *II*, so their maximum loads will be about equal, which may be considered an advantage if both are to be made of the same size. However, this construction is rare.

Truck Change Gears.—In change gears designed for motor trucks the unit stresses are kept lower, for the reason that trucks are operated a great deal of the time in congested thoroughfares where it is necessary to do much driving on the lower gears. Besides, a little extra weight does not count for so much in a truck as in a high speed pleasure car. For this same reason chrome nickel or other high tensile steels are seldom, if ever, used for the gears and pinions of truck transmissions. With

carbon steel and low carbon alloy steel, case hardened, the following unit stresses may be allowed in the gears:

Pitch Line Velocity. (Ft. p. m.)	Allowable Stress. (Lbs. p. sq. in.)
500	20,000
600	18,000
700	16,000
800	14,000
900	12,000
1000	10,000

The bearings of commercial change gears should also be of

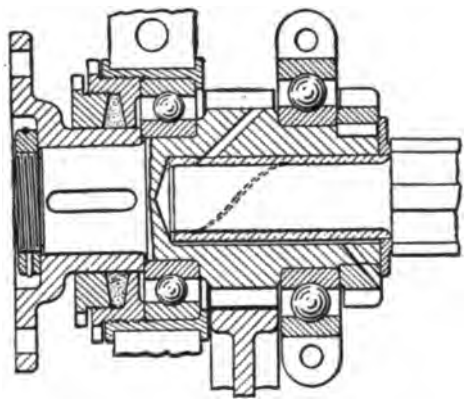

FIG. 57.—CONSTANTLY MESHED PINION WITH BEARINGS ON BOTH SIDES.

somewhat more liberal size than those in pleasure car gears, for the same reason.

Shaft Dimensions—One of the chief requirements in a change gear box is quiet operation, and this necessitates rigid shafts. The sizes of the shafts are, therefore, more dependent upon the maximum permissible flexure than upon the torque to be transmitted. The tooth pressure on the gears located midway between bearings creates an appreciable flexure of the shafts, and the pairs of gears located near the bearings also create some flexure, but this may be neglected. The shafts should be made of such a diameter that the maximum flexure due to any pair of gears is not more than 0.003 to 0.005 inch. In Chapter XI of Volume I is given a formula for the flexure of shafts supported

at their ends and carrying a concentrated load between bearings, viz.,

$$y = \frac{P l^3}{8{,}800{,}000\, d^4} (2x^4 + 2x^3 - 4x^3),$$

where P is the load on the shaft in pounds; l, the length of the shaft between the centres of bearings, in inches; d, the diameter of the shaft in inches, and x the ratio of the distance of the load from the farthest support to the distance between supports.

Applying this equation to the secondary shaft of the gear box calculated in the foregoing, in which the flexure is evidently a maximum when the low gear is in operation, we have

$$P = 1{,}693 \textit{ pounds} \quad l = 8.563 \textit{ inches}$$

$$x = \frac{5.344}{8.563} = 0.624$$

$$2x^4 + 2x^3 - 4x^3 = 0.11$$

If we decide to allow a maximum flexure of 0.005 inch, then

$$0.005 = \frac{1{,}693 \times 8.56^3}{8{,}800{,}000 \times d^4} \times 0.11$$

and

$$d = \sqrt[4]{\frac{1{,}693 \times 8.56^3 \times 0.11}{8{,}800{,}000 \times 0.005}} = 1.28 \text{ — } \textit{say } 1\ 5/16 \textit{ inch.}$$

In some designs of change gears the secondary shaft is made of somewhat greater diameter in the middle than at the ends, with the object of securing the most rigid shaft with the least material.

The primary shaft, since it has substantially the same span between the supports and is subjected to the same loads similarly located, should be made of practically the same diameter as the secondary shaft; or, rather, it should have a cross section equivalent to that of the secondary shaft with respect to bending stresses.

Reverse Gear Arrangement—Various arrangements of gears for obtaining the reverse motion are in use. The most common is that already illustrated in Fig. 50, in which the secondary shaft carries a reverse pinion sufficiently smaller than the low speed pinion to allow the low speed gear to clear it when shifted opposite it. This reverse pinion meshes with a reverse idler on a special shaft mounted parallel with the primary and secondary shafts, usually in the lower part of the gear box.

A somewhat different arrangement is shown in Fig. 58, in which A is a pinion of double width serving for both the low gear and the reverse; B is the low speed and reverse gear and

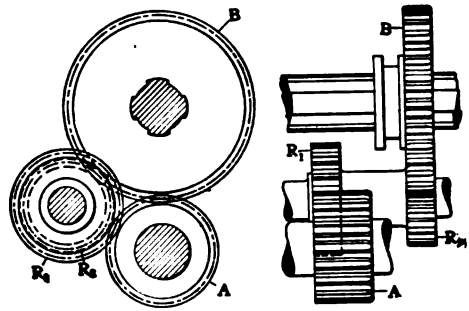

FIG. 58.—REVERSE GEAR WITH TWO IDLERS.

R_1 R_2 are reversing idler gears on a special short shaft. Sliding gear B is shown in the position corresponding to the reverse motion. By sliding it to the left until it meshes with A the low forward speed is obtained. One advantage possessed by the arrangement Fig. 58 over that of Fig. 50 is that with the former there is less strain on bearing II (at the rear end of the secondary shaft) than with the latter when the reverse gear is operating.

The two types of reverse gear so far shown are used in three speed selective and in progressive type gears. In four speed gears the reversing idlers may be arranged slidably (see Fig. 59),

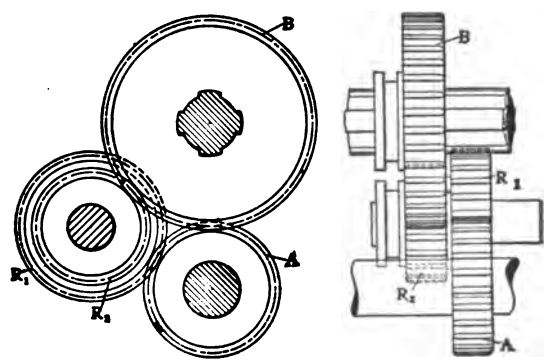

FIG. 59.—REVERSE GEAR WITH SLIDING IDLERS.

and by means of a separate sliding bar slid into mesh with both the low speed pinion and gear while the latter are out of mesh. To obtain the low speed forward, gear *B* is shifted to the right into mesh with pinion *A*. On the other hand, when it is desired to back up, gear *B* is placed in the neutral position (which it occupies in the illustration) and reversing pinions R_1 and R_2 are slid to the left into mesh with *A* and *B* respectively, as shown.

Direct Drive Clutch—There are two types of direct drive clutches in common use, viz., the jaw type, illustrated in Fig. 60, and the spur and internal gear type, shown in Fig. 61. The former type consists of jaws formed on the adjacent faces of the constantly meshed pinion and the intermediate speed gear respectively. Usually each part has four such jaws, equal in size, and subtending at the axis of the shaft an angle slightly smaller than that subtended by the space between them. The outer edges of the jaws are chamfered to facilitate engagement. The radial width of these jaws is usually made about one-quarter the shaft diameter and the length the same.

Where the spur and internal gear type of clutch is employed the constantly meshed pinion often serves as the spur member, and the intermediate speed gear is cut with internal gear teeth, in addition to its regular spur teeth, to serve as the other member. It is somewhat difficult to cut these internal gear teeth. The job can be done by counterboring the rim of the spur gear and then planing the teeth, but it is a much preferable plan to use a form of mongrel teeth made by drilling holes into a solid gear blank from the side and then chambering the blank out so as to cut away half of the stock between the holes (see Fig. 61).

Front Bearing of Sliding Gear Shaft—Notwithstanding the difficulty of keeping such a bearing effectively lubricated, a plain bearing is often used at the forward end of the squared or fluted shaft, on which the gears slide. This construction renders non-fluid oil unsuitable as a gear box lubricant. With a fluted shaft the journal would be made about three-quarters the diameter of the shaft proper so as to give a substantial shoulder, and about three diameters long. As in the case of the engine tailshaft, large oil holes and grooves are necessary, and the scheme of lubrication should be carefully worked out.

Instead of a plain bearing, a cylindrical roller bearing consisting of long, thin rollers is sometimes used, extending into the counterbore of the shaft, the same as the plain bearing. However, a more common construction is to use either a single or a double row non-adjustable ball bearing, as illustrated in Fig. 61.

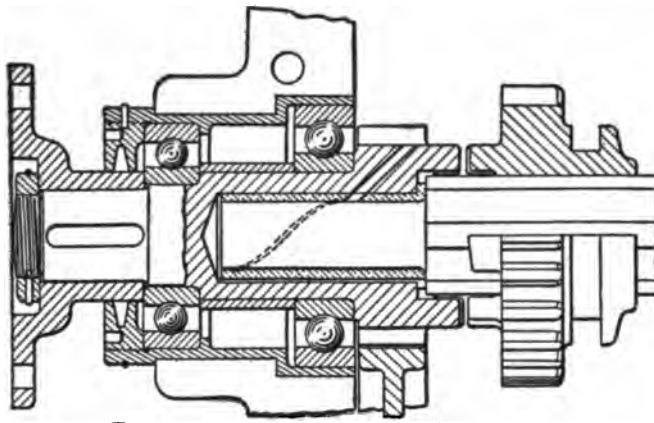

FIG. 60.—DIRECT DRIVE JAW CLUTCH.

Some designers use a specially large constant mesh pinion in order to be able to accommodate a ball bearing of sufficient capacity, obtaining the required reduction ratios by using very small intermediate, low speed and reverse pinions on the secondary shaft. The light series of ball bearings is naturally best adapted for this purpose, since it has the least radial depth for a given load capacity. However, double row bearings seem to be preferred for this point, since it is difficult to find room for a bearing of ample capacity.

Sliding Gear Shaft—As already pointed out, in the earlier sliding change gears the sliding pinions were slid on squared shafts. These are still used to a slight extent, but have for the

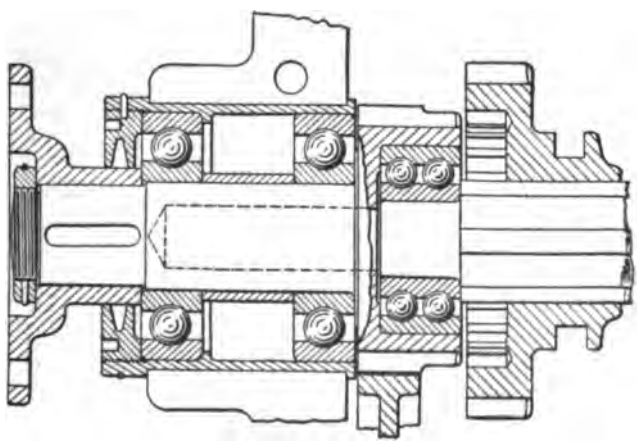

FIG. 61.—DIRECT DRIVE SPUR AND INTERNAL GEAR CLUTCH.

most part been replaced with splined or integral key shafts. The two types of shafts are shown in cross section in Fig. 62. So-called squared shafts are not absolutely square, but have rounded corners. They are made from round shafts by milling four flats on them to such a depth that the distance between opposite flats is 0.8 the diameter across the corners, or the diameter of the original shaft. Denoting the side of the square formed by the flats by h, the torsional strength of such a shaft is about $0.21\ h^3S$ pounds-inches, h being given in inches. The flats are often finished by grinding, and if the shaft is to carry long sleeves supporting the sliding gears, they are sometimes cut with wavy oil grooves so that oil may flow to parts of the shaft that are never exposed by the sliding members. Some makers bore the hole in the gear to a slightly greater diameter than the side of the

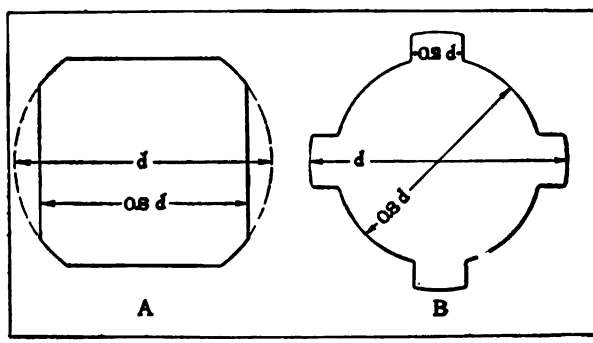

FIG. 62.—SECTIONS OF SQUARED AND SPLINED SHAFTS.

squared shaft, so that when the hole is broached out, from two-thirds to three-fourths of its side will be a plane surface and the rest cylindrical. (See Fig. 63.) This facilitates the broaching, tends to obviate gripping of the sliding members and does not appreciably reduce the effective bearing surface, because the pressure is localized near one edge of the flat.

As compared with the squared shaft, the splined shaft possesses the advantage that it takes the torsional load perpendicularly on the sides of the splines, whereas in a squared shaft most of this load comes close to one edge of the flats, with the result that in the latter the unit pressure may become very high and the lubricant may in consequence be squeezed out, which is not likely to occur with a splined shaft.

In American practice, splined gear shafts are made with four splines for small and moderate sized gear boxes, while in large gear boxes six splines are used. European practice tends to a more general use of six splines. Uneven numbers of splines have also been used, but they are subject to the disadvantage that they make it very difficult to caliper the diameters of the shaft accurately. The ratio of the bottom diameter of a splined shaft to the top diameter or diameter over the splines is generally about 0.8, and the width of the splines is made about one-quarter the bottom diameter, or 0.2 times the outside diameter. (For S. A. E. standard splined fittings see Appendix.)

Practice varies as to the manner of locating the gears. Some

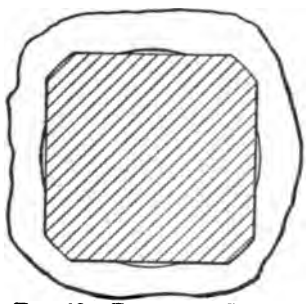

FIG. 63.—BROACHED SLIDING GEAR WITH PART OF FLAT RELIEVED.

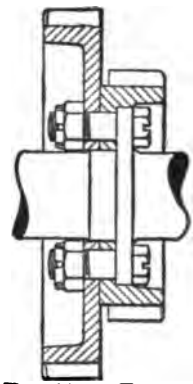

FIG. 64. — FLANGE BOLTED GEARS ON SECONDARY SHAFT.

manufacturers grind the outside of the shaft—that is, the top surfaces of the keys, and let the gear ride on these surfaces, using the broached hole in the gear. Others grind out the hole in the gear (after the latter has been hardened) true with the pitch circle or the bottom circle, and let the gear ride on the bottom surface of the splined shaft. Both methods involve certain difficulties, and it is hard to say which is the better of the two, everything considered.

Proportions of Gears—The rims of gears below the tooth annulus are made of a thickness varying from 0.5 to 0.6 the circular pitch, and the webs about the same. Since teeth of 6 and 6-8 pitch are used almost exclusively in sliding gears, whose cir-

cular pitch is 0.52 inch, both rim and webs are generally made ¼ inch thick. When the web is located to come flush with one side of the rim, the latter may taper from ¼ to 5/16 inch in width, but it is undoubtedly preferable to have the web central. In this connection it is worth remembering that substantial rims and webs and liberal fillets tend to quiet operation, and the general tendency seems to be toward a slight increase in the thickness of the sections. The smaller pinions, of course, are made solid, and only the larger gears are webbed. As regards the secondary shaft gears, in American practice they are generally secured to the shaft by means of Woodruff keys, while European designers, as a rule, flange-bolt the gears to the shaft

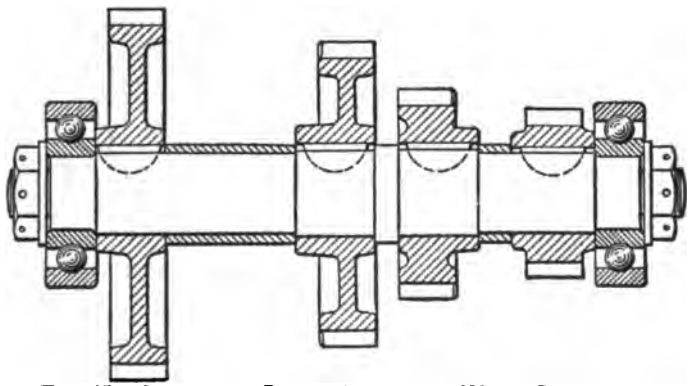

FIG. 65.—SECONDARY SHAFT ASSEMBLED WITH GEARS AND BEARINGS.

or to a sleeve keyed to the shaft. Frequently the gears for the two intermediate speeds are bolted to the same flange, as shown in Fig. 64. One of the reasons for flange-bolting the gears is that they are then of very simple form and are not so likely to distort in hardening. To insure concentricity the web of the gear is bored out to fit accurately over an enlargement of the shaft. The gears may also be riveted to the flanges.

The gears on the secondary shaft must be accurately and securely fixed in position longitudinally, and this is generally accomplished by turning the shaft with a collar near its middle against which a gear is forced from either end, and using tubular spacers between these inner and the outer gears on the shaft, as shown in Fig. 65.

Instead of keying the gears on the shaft and supporting the latter in antifriction bearings in the housing, the entire set of secondary gears may be made in a single forging, which revolves on a stud secured in the housing, as illustrated in Fig. 66. Bronze bearing bushings are forced into the hub of the gear set from both ends. This construction is made possible by modern methods of gear planing. It is obvious that a secondary gear set so arranged may be made quite rigid, and as the journal diameter is small, the frictional loss should be low. If the gear case has a separate end plate the shaft may

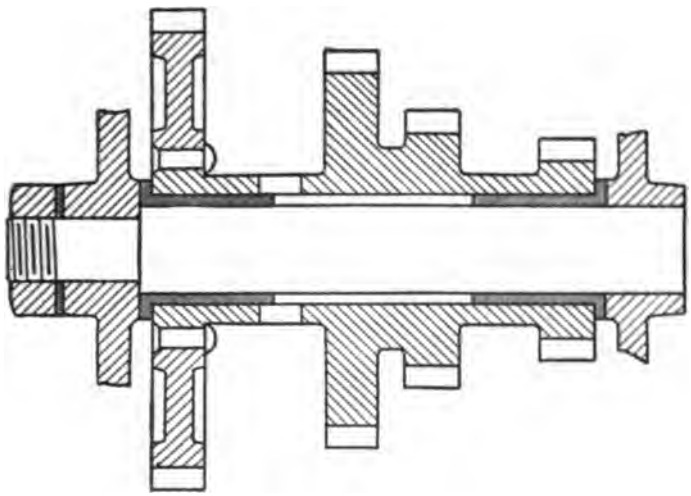

FIG. 66.—SECONDARY GEAR ASSEMBLY ON STATIONARY SHAFT.

even be dispensed with, the gear set then being forged with journals at both ends which have a bearing in the housing.

Manufacture of Gears—Blanks for the pinions and gears of sliding gear sets are made either from bar stock or from drop forgings, the larger blanks being generally forged on account of the saving in machine work. Before any work is done upon the blanks they should be annealed to remove the forging strains, and thus obviate undue distortion during the subsequent heat treatment.

It is not intended to go extensively into the question of gear cutting in this volume, because it is an involved subject and has

been ably treated in special works. Suffice it to say that gear teeth are either milled by means of formed cutters, or planed with ordinary cutters, which by means of templates or other devices are moved so as to produce the proper shape of tooth. In all gear cutting there are two operations, the rough cutting or stocking and the finish cutting. Only very little stock should be left for the latter operation, so that there may be very little

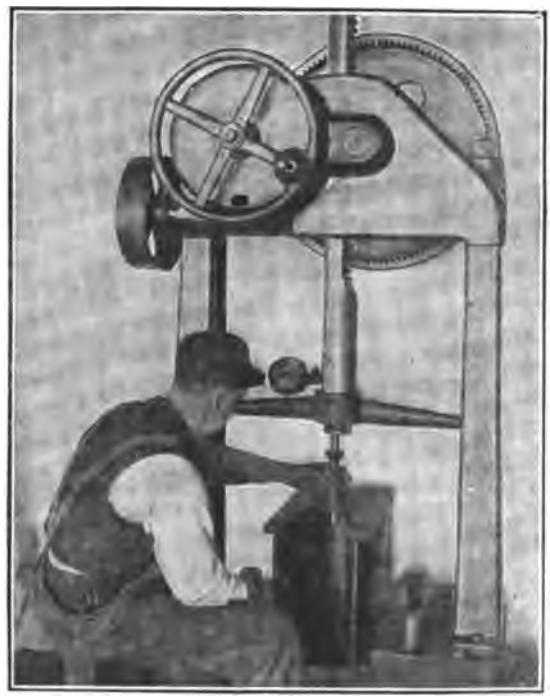

FIG. 67.—FORCING GEARS ONTO SECONDARY SHAFT.

strain on the cutting tool, and thus the highest degree of accuracy attained.

After the teeth are finish-cut, the ends from which the gears are to be meshed have to be chamfered. This may be done by means of a milling machine attachment, as illustrated in Fig. 68. The attachment is clamped to the table of the milling machine, and the chamfering tool is held in the spindle of the latter.

The attachment comprises a work spindle on which the gear to be chamfered is mounted, which is alternately fed toward and away from the revolving cutter by means of a cam driven through gearing from the main shaft of the attachment. On a secondary shaft is mounted a worm of the same pitch as that of the gear to be chamfered and in which it is meshed. This secondary shaft is driven through gears from the main shaft. The main shaft is driven by belt from an overhead countershaft, which is entirely independent of the milling machine countershaft. As the main shaft revolves the worm, meshing with the

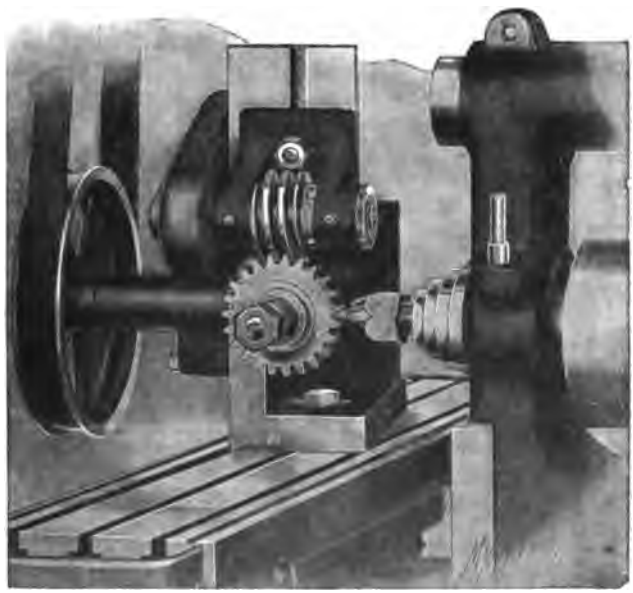

FIG. 68.—"LONG ARM" TOOTH CHAMFERING ATTACHMENT.

gear to be chamfered, turns it, and at the proper intervals the cam mechanism feeds it toward and away from the V-shaped revolving cutter. The gear to be chamfered is thus automatically indexed.

The contour of the chamfering may be changed by using special cams, or special cutters, or both. The profile at the end of the tooth may be changed by swiveling the attachment on the

table. The end of the tooth may thus be left at right angles with the axis of the gear or at any desired angle.

The next operation in the manufacture of the gears is to harden or case-harden them. In case-hardened gears, if it is desired that any portion of the surfaces should remain soft, this can easily be accomplished by leaving about 1/32 inch extra stock on these surfaces and removing it after the gear is carbonized and before it is quenched. This practice also tends to prevent undue distortion of the gear during the quenching. Another process designed to accomplish the same purpose, and which is undoubtedly less expensive, consists in copper-plating the gears just before the finishing cut is taken and the ends are chamfered. The result is that when the gears are carbonized after these machining operations only those portions of the gear from which the copper shell is removed will take up carbon from the pack and will become hardened on being quenched. Gears thus treated are so little distorted by the quenching that they can readily be corrected to the desired degree of accuracy.

Every effort must be made in the manufacture of gears to get every part as nearly true as possible. It would not seem to matter much whether or not the sides of the gear blanks are turned absolutely true. This, however, is quite essential, for the reason that gears are generally cut in "gangs," a considerable number of them being forced over the mandrel and the milling cutter, etc., then being fed through the whole set in one operation. Now, if the sides of the blanks are not absolutely parallel there is a tendency to distort the mandrel when the nut is turned up, and thus to produce irregularity in the teeth.

For the grinding of the hole after the teeth are cut, as referred to in the foregoing in connection with splined shafts, a special fixture is required for holding the gears. This consists of a face plate with several studs driven into it parallel with its axis and at such a distance therefrom that they fit accurately between the teeth of the gear at the pitch circle. These locate the gear concentrically with the grinder spindle, and it may then be held in position by means of a couple of clamping plates and bolts. The fixture serves also as a rough gauge for indicating the accuracy of the gear cutting operation. If the teeth have been cut too deep, the gear will be loose in the fixture, whereas if they have not been cut deep enough it will not enter between the studs.

Tester for Gears—A more delicate gauge or gear tester is made as follows (Fig. 69): A vertical shaft *A* is fixed to a

base and provided with a bushing over which fits the gear to be tested. An eccentric stud *B* is mounted on the base in such a position that when the line between its centres is perpendicular to the line between the axis of its top portion and that of the fixed stud, the distance between the latter two axes is the exact distance between the axes of the gear shafts. An indicating hand or pointer *C* secured to the eccentric stud then points to zero. The pointer moves over a double scale, and therefore shows exactly how much the gear is either too small or too large.

Unless the teeth are finished by grinding after hardening—a process that is seldom applied at present—some allowance must

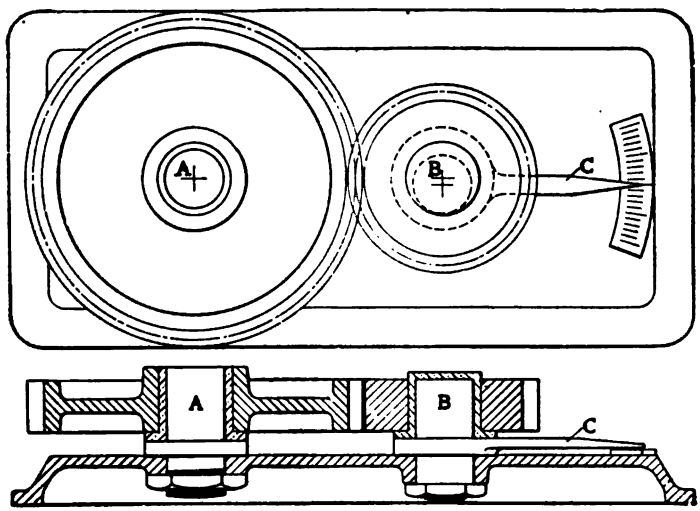

FIG. 69.—GEAR TESTER.

be made for swelling or distortion during the hardening process, by either cutting each of the gears 0.005 to 0.010 inch small on the pitch diameters, or else placing the two shafts that much farther apart than the calculated distance.

Sliders—The individual sliding members in a gear set are operated by means of sliding bars, ⅝ to ¾ inch in diameter, and arranged parallel with the gear shafts, which carry forks that fit into grooves formed in the projecting hubs of the gears. Two such sliding bars are provided in all three speed gears, and three in some four speed gears. Generally the sliding bars are placed

side by side, but sometimes they are arranged concentrically. The sliders are located inside the gear box near one of the side walls thereof, and have their bearings in the end walls. In order to insure accurate meshing of the gears, as well as to lock them out of mesh, a locking arrangement similar to that illustrated in Fig. 70 must be provided. It consists of a spring pressed plunger or ball which enters V slots in the sliding bar, corresponding to the neutral position of the sliding set and the two or more positions of engagement, respectively. These locking dogs will hold the slider in the neutral position when it is disconnected from the operating lever and enable the driver to find the correct meshing position when it is connected thereto. While this method of locking the sliders is not positive, it is sufficiently dependable for all practical purposes. In most designs of selec-

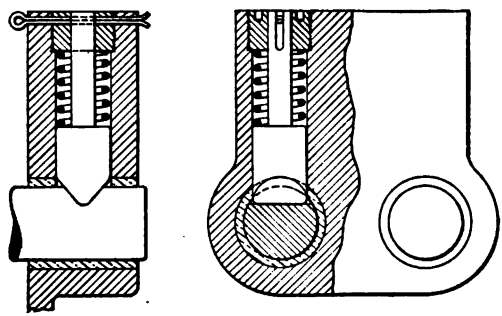

FIG. 70.—LOCKING DOG FOR GEAR SLIDER.

tive gear the operation of picking up one slider with the shifting lever entails the automatic and positive locking of the other sliders.

Mounting of Bearings—If the gear case is made of aluminum and anti-friction bearings are used, the latter are generally mounted in bronze bushings, instead of directly in the casing. This practice was introduced because the aluminum was considered too soft, and it was thought necessary to distribute the pressure over a greater surface than that of the bearings alone. With the improvements which have been made in aluminum alloys in recent years this is no longer absolutely necessary, but the practice is still adhered to by some designers. The bushings are provided with outward radial flanges so as to be held securely against endwise motion.

The inner races of radial ball bearings should always be forced onto the shaft under moderate pressure, and should be securely clamped between a substantial shoulder on the shaft and a nut which is locked by some approved means. Of the outer races on a single shaft not more than one should be firmly secured in a lengthwise direction, as otherwise there is danger of subjecting the bearings to undue end thrust.

Taking up the bearings on the secondary shaft first, the inner races are secured to the shaft as above described. Of the outer races one may be clamped between an inward flange on the bushing and the bearing end cap, as shown in Fig. 71A, and the other one made a sliding or "suction" fit in the casing or bush-

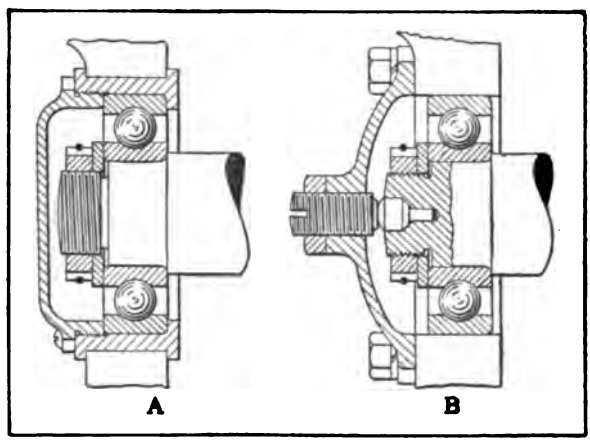

FIG. 71.—MOUNTING FOR SECONDARY SHAFT BEARINGS.

ing and left free to move endwise. An alternate arrangement consists in leaving both outer races free endwise and taking up the end thrust on hardened thrust buttons fitted into the shaft ends and the bearing caps, respectively. Set screws with rounded points may be screwed through the centres of the caps to take the place of the buttons therein as shown at *B* in Fig. 71.

The rule that the inner races must be firmly clamped between a shoulder and a nut or spacer applies to all bearings. Likewise, if there are two or more bearings on one shaft, the outer races of all but one of them should be free endwise, and if a thrust bearing is used in addition to radial bearings, the outer races of all the latter should be free. In some cases the for-

ward bearing on the primary shaft is subjected to the end thrust of the clutch spring, and should then be provided with a ball thrust bearing. This is generally placed between the two radial bearings. However, the necessity of firmly clamping both of the inner races on the shaft and allowing the outer races some endwise motion should not be lost sight of in this case. Fig. 72 shows two ways in which these requirements can be met. At *A* is shown the Alco design, which employs a single thrust bearing. The design shown at *B* is taken from a paper read by F. G. Barrett before the Institute of Automobile Engineers, London, on February 14, 1912. With the latter design the thrust bearings can be properly adjusted and the adjustments locked before these bearings are placed on the shaft.

Geared-up Fourth Speed—The greatest transmission efficiency and the most silent operation are obtained with the direct

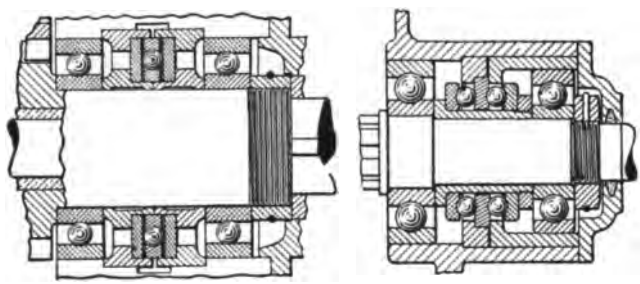

FIG. 72.—MOUNTINGS FOR PRIMARY SHAFT BEARINGS.

drive, and the designer, therefore, should strive to so proportion his gear reduction that the car can be driven on direct drive under all normal conditions. This means that there should be a relatively large reduction between the gear box and rear wheels. However, in many types of cars very high maximum speeds are desired, which conflicts with the requirement of a high reduction ratio in the final drive. These conflicting requirements led to the construction of four speed gears in which the direct drive is the third speed, and the fourth is a geared-up speed, 25 to 30 per cent. higher than the direct drive. Fig. 73 shows the lay-out of the Winton change gear, with indirect fourth speed. The geared-up speed is obtained by placing on the secondary shaft near its rear end a gear with a larger pitch diameter

than the constantly meshed gear, adapted to be meshed with a sliding pinion on the driven primary shaft of a smaller pitch diameter than the constantly meshed pinion. In a gear of this type it is advantageous to keep the reduction ratio of the constantly meshed pair of gears low, as otherwise the pitch line velocity of the high speed gears will be very high and their operation is likely to be attended by considerable noise.

Gear Cases—The gear cases of nearly all pleasure cars are cast of aluminum alloy of the same composition as that used

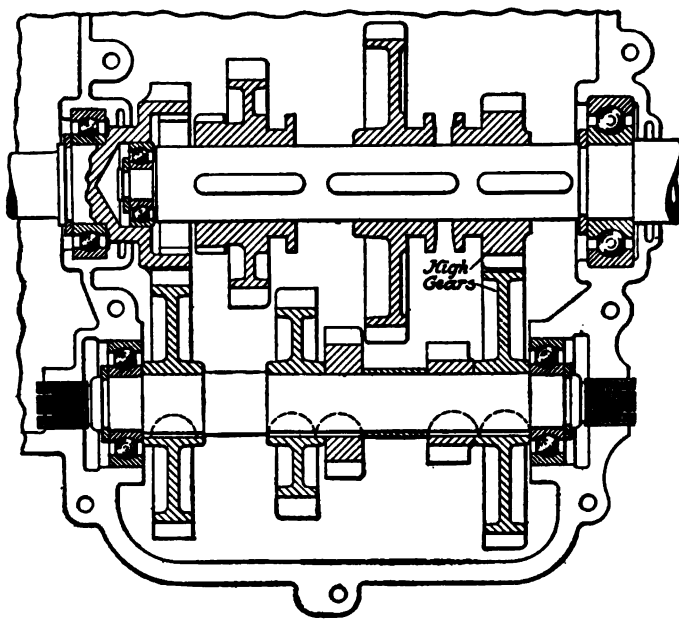

FIG. 73.—LAYOUT OF WINTON CHANGE GEAR WITH GEARED-UP FOURTH SPEED.

for the engine crankcase. However, manganese bronze is also used for that part of the case which supports the shafts and on which the greater part of the strain comes. The gear boxes of many motor trucks, especially those of European design, are made of cast steel, and cast iron cases are also in use.

There are two common arrangements of the shafts in a gear

box. Either the secondary shaft is located directly underneath the primary shaft or the two shafts are located in a horizontal plane. There is, of course, a third possible arrangement, where the plane of the shafts is neither horizontal nor vertical, but this is seldom met with. Taking up first the case of shafts in a vertical plane, the gear box may be cast in a single piece except for a large hand-hole cover plate (Fig. 74); it may be made of a shell, two end plates and a hand-hole cover, or it may be divided horizontally through the centre of the primary shaft bearings. Where the shafts are in a horizontal plane the box may be cast in a single piece with a large cover plate (Fig. 75), or it may be

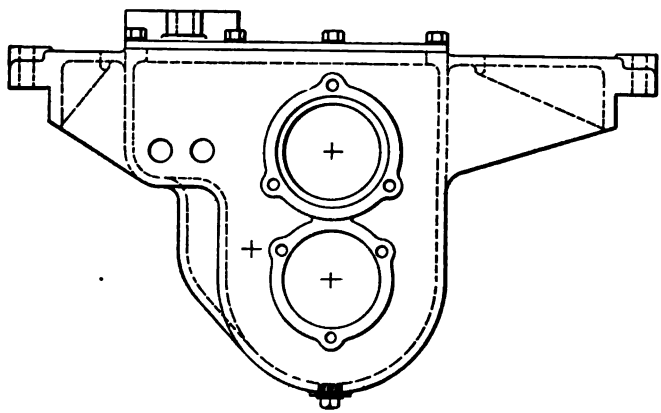

FIG. 74.—ONE-PIECE GEAR CASE WITH GEAR SHAFTS IN VERTICAL PLANE.

in halves joined through the centres of the bearings (Fig. 76). One-piece gear boxes with shafts in a vertical plane seem to be preferred in connection with unit power plants, probably on account of the symmetry of outline obtainable with them. An approach to symmetry can also be obtained with a gear box whose shafts are in a horizontal plane, by placing the shifter bars on a level with the gear shafts and allowing about the same space in the case for these bars, the selecting lever and the locking dogs as for the secondary shaft and gears.

The cases must accommodate not only the gears and shafts but also the slider bars, and in most cases also the selecting lever, though in some instances this is located outside the case.

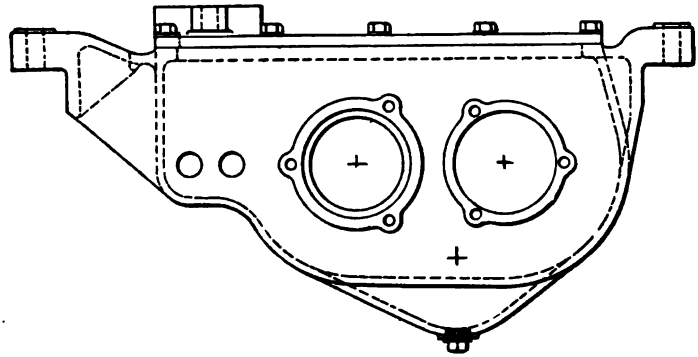

FIG. 75.—ONE-PIECE GEAR CASE WITH GEAR SHAFTS IN HORIZONTAL PLANE.

Usually there is a special lever house formed integral with or secured to the cover plate or top half of the case, in which the shifter lever moves, the shaft of the gear shifting hand lever passing through the side walls of this housing.

The tendency among American designers is to use "functional" gear cases; that is cases with an irregular projection on a plane parallel to that of the gear shafts, whose walls at nearly every point lie close to some part to be enclosed. European designers, on the other hand, seem to be inclined toward box-like gear cases whose longitudinal walls are parallel and whose section is

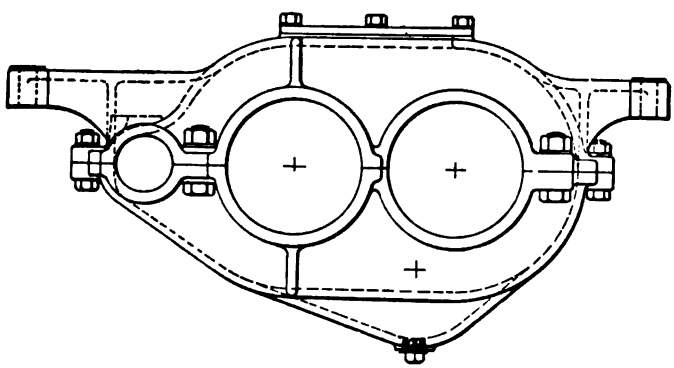

FIG. 76.—GEAR CASE DIVIDED THROUGH AXES OF SHAFTS.

such as to cover with a margin the end projection of the entire gear. The functional case is less bulky and probably somewhat stronger than the box-like case, but the latter requires a simpler pattern and is easier to keep clean.

Wall and Joint Dimensions—Gear cases cast of aluminum are made with walls from 3/16 to ¼ inch thick. At the joint a flange is run around the outside on each part which makes the width from ½ to ⅝ inch, the flange being made ¼ to ⅜ inch high and joined to the wall of the case with a liberal fillet. The halves are held together by 5/16 inch bolts and nuts (⅜ inch in extra large gears) spaced 3 to 4 inches apart. Substantial lugs must be provided for these bolts, not less than ½ inch high.

Supporting Methods—Gear cases are supported on a sub-frame, on cross-members of the main frame or on the main frame itself, the latter arrangement being rare. Where a sub-frame is employed for carrying the engine and gear box, the axis of both usually lie from 1 to 1½ inches below the top or supporting surface of the frame members, whereas if the parts are supported on the main frame their axis lies from 4 to 7 inches below the top surface of the latter. The simplest method of supporting the gear case is that by means of a sub-frame, and this is generally used where the shafts are in a vertical plane. Four short arms are then cast integral with the case, whose supporting surface is from 1 to 1½ inches above the axis of the primary shaft, and the gear box is rested on top of the sub-frame. Gear cases are also often provided with what is known as a three-point support; that is, the case is cast with two arms at one end, resting either on a sub-frame or on a cross-member of the main frame, and at the other end is supported in a trunnion carried on a cross-member of the frame and surrounding the primary bearing hub. This gives a true three-point support. An approximation to a three-point support is obtained by using, instead of the trunnion, two bolts passing through lugs on the gear box on opposite sides of the primary bearing, and through a cross-member of the frame.

When cross-members of the main frame are used for supporting the gear box, the latter is frequently hung or suspended from them, so that it drops right out of the car when the supporting bolts are removed. Gear cases divided through the centres of the shafts may have the arms cast on either half. The arms are often extended out from the sides of the box and are swung to the front and rear respectively, so that the frame cross-members

will clear the box proper, endwise, thus making it possible to place these supporting members lower.

Machining of gear cases involves little difficulty. If the case is made in halves the first operation consists in milling the faces of the joint, of the seat for the cover plate and of the supporting arms. Next the holes of the joint are drilled in a multiple spindle drill, and finally the bearing holes are bored out and faced off. If the whole case is cast in a single piece, the machining of the joint is eliminated and considerable work is saved. Divided gear cases are used only on the more expensive cars.

Lubrication of Gear Boxes—Gear boxes, as a rule, are partially filled with non-fluid oil, but those having a parallel bearing on the sliding shaft generally require a fluid lubricant. For easy introduction of lubricant a hole is provided in the cover plate, closed by means of a screw plug, and for washing out stale lubricant with kerosene or gasoline a drain plug is provided at the lowest point in the bottom of the case. Proper precautions must be taken to prevent the oil or grease from working out through the joints of the case and around the bearings. The ends of the secondary shaft bearings are closed by caps, and stuffing boxes or felt washers should be placed on the primary shaft where it extends through the bearings. Paper gaskets are placed between the several parts of the case.

It has been found that when the gears in a gear box are running under load, the temperature within the box is raised considerably and the resulting air pressure tends to force the lubricant out around the protruding shafts and through joints in the box. To obviate this, gear boxes are now often provided with breathers similar to those on engine crankcases.

Running-in of Change Gear—After a change gear is assembled it is run from a line shaft for some time in order to limber up its parts. While this running-in is taking place the case must be well supplied with lubricant. It was formerly customary to "lap" the gears in by running them with the case partly filled with a mixture of emery powder and oil, using dummy bearings for the purpose, but this is no longer considered necessary.

The reverse idler is carried on a plain bearing. A short shaft is usually secured into a hub cast on the wall of the casing and an integral support rising from the base of the latter, and the idler is bushed with bronze and runs free on this shaft. Large oil holes are drilled radially through this gear and large oil grooves are cut in the shaft.

Efficiency of Operation—Comprehensive tests of the efficiency of a sliding pinion change gear were made some years ago by the H. H. Franklin Mfg. Company, of Syracuse, N. Y., and were reported in THE HORSELESS AGE of February 12, 1908, by G. Everett Quick. The gear tested was of the three speed and reverse progressive sliding type. Its shafts were mounted on radial ball bearings but the forward bearing of the sliding shaft was hardened steel in bronze. All gears were cut with six pitch teeth of ⅝ inch face and were made of 3½ per cent. nickel steel, heat treated. The method of making the test was as follows:

A direct current electric motor was provided with a countershaft and a pulley thereon capable of serving as the pulley of a brake dynamometer. The electric motor was then carefully calibrated; that is, tests were made to accurately determine the horse power output for any input in amperes, the voltage remaining constant. After a calibration curve had been plotted, the electric motor was connected to the driven end of the change gear and the brake dynamometer was transferred from the electric motor to the driving end of the change gear. When a run was then made and the electric motor consumed a certain number of amperes, the power applied to the change gear could be read off directly from the calibration curve of the electric motor and the power delivered by the change gear could simultaneously be determined by taking readings of the dynamometer. The quotient of the power delivered by the change gear to the power applied to it then gave the efficiency. The results obtained are plotted in the curves Fig. 77. It will be seen that on the direct drive the efficiency under the most favorable conditions of speed and output is about 98 per cent. On the intermediate gear the efficiency rises slightly above 95 per cent. On the low gear it attains 94 per cent. and on the reverse about 87 per cent.

The change gear used in making the tests had been run about 1,000 miles in a demonstrating car, and the case was about half full of heavy lubricating oil during the test. A study of the curves will show how a difference in the pitch line velocity of the gear and different ratios affect the efficiency. Most previous investigations of gearing efficiency were made at lower pitch line velocities. The speeds indicated in the curves are those at the driven end of the gear.

Positive Clutch Change Gears—A design of change gear somewhat related to the sliding gear type is that in which all of

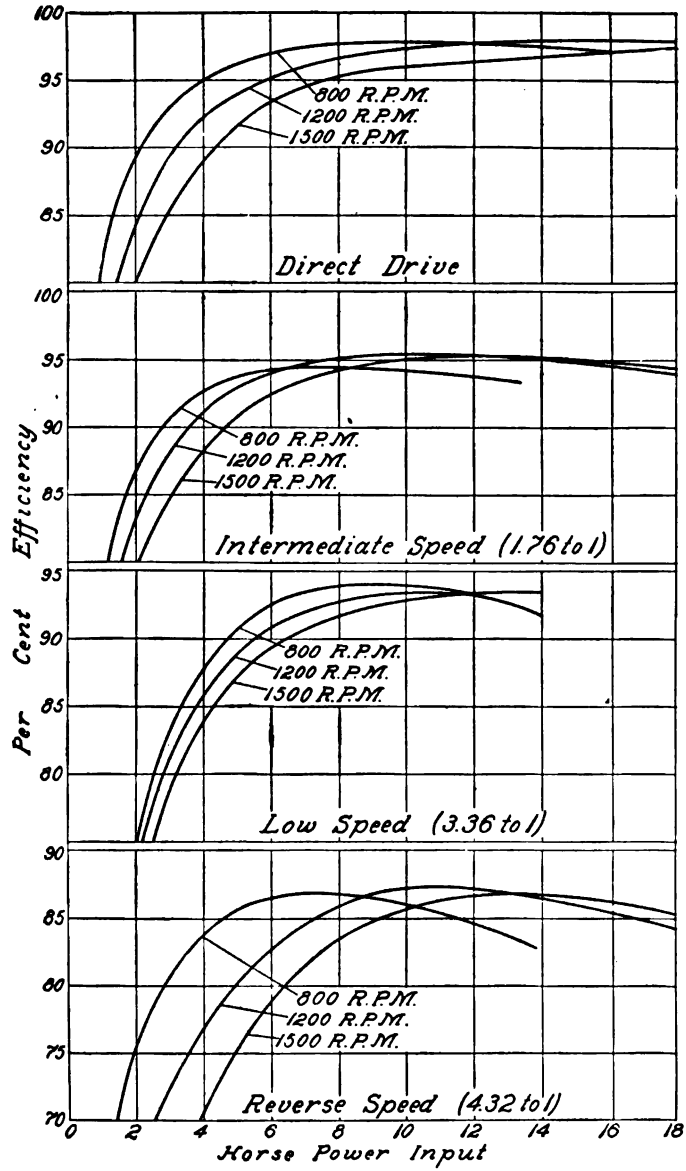

FIG. 77.—EFFICIENCY CURVES OF FRANKLIN GEAR BOX

the gears remain constantly in mesh and the gears on the primary shaft are normally free to turn thereon but may be fixed to the shaft by means of positive clutches. These clutches, if of the jaw type, are proportioned the same as those used for the direct drive in sliding change gears. Difficulties due to meshing of the teeth are avoided by the construction, but a gear of this type is considerably longer than a sliding gear of the same capacity and number of gear changes. Instead of jaw clutches, internal and external gear clutches may be used. The gears on the primary shaft must be held against endwise motion while the movable clutch members must be free to slide on the primary shaft on keys or squares. Two change gears of this type are illustrated in Figs. 78 and 79.

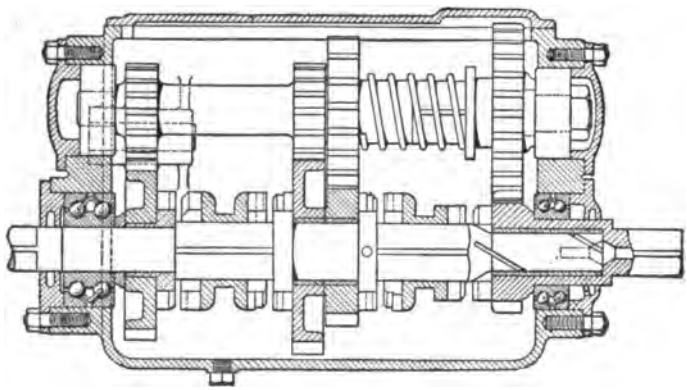

FIG. 78.—COTTA POSITIVE CLUTCH CHANGE GEAR.

Silent Chain Change Gears—The recent quest for silent operation has led to the adoption of silent chains instead of spur gears in change gear boxes by a few European manufacturers. A notable example of the use of these chains is found in the gear boxes of London motor omnibuses. Fig. 80 illustrates this change gear, which employs Coventry silent chains. As in the case of constantly meshed gear sets, positive clutches of either the jaw or internal-external gear type have to be used, and this combined with the fact that for the transmission of a certain amount of power the chain must be considerably wider than the face of a spur gear, makes the gear set rather long. This necessitated the use of a pair of intermediate bearings in the design here shown. Naturally, the shaft centre distance also has to be

greater than in a sliding gear, and this results in a rather bulky gear box. However, the London experience with these gear boxes has shown that not only do they operate noiselessly, but the chains, notwithstanding their short length, have a very satisfactory length of life, even under the very severe conditions of omnibus service necessitating frequent stops and acceleration of a 5 ton load. One advantage claimed for the chain gear box over the spur type is that, whereas careless or unskilled operation with the latter may result in stripping of the gears, necessitating expensive repairs, with the former the worst that may happen is breakage of the chain, and a new link may easily be inserted. In

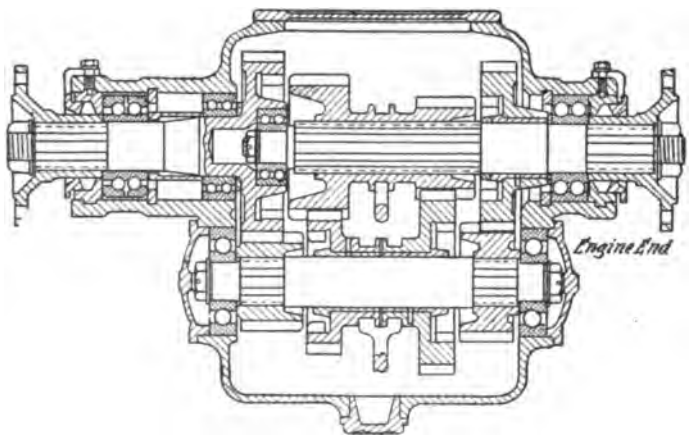

FIG. 79.—DUX POSITIVE CLUTCH CHANGE GEAR.

view of the possibility of such breakages the gear box must be designed with enough room at the bottom to contain the chain without it touching the chain wheels, and there must also be a liberal clearance all around the chain wheels.

Some of the points to be observed in the design of silent chain change gears are as follows: The distance between shaft centres must be sufficient to allow of joining up three or four different drives without excessive slack in any of them. In the London omnibus gear boxes chains of two different pitches (⅝ and ¾ inch) are used in order to solve the problem of substantially equal centre distances without slack in the chains for the dif-

ferent drives. Pinions of less than 23 teeth should preferably have an odd number of teeth, in order to insure the maximum service from the faces of the teeth, and the number of links in each chain should be even. The reverse motion in a silent chain change speed gear is obtained in a very simple manner by means of a pair of spur gears which are slid into and out of mesh.

In conclusion it may be stated that silent chain gear boxes owe their introduction to an order of the London police department to compel the London General Omnibus Company to reduce the noise of its omnibuses (mainly due to worn gear boxes) or to take them off the streets. As yet these change gears are very little used on stock cars, but in view of the great importance at present attached to silent operation of pleasure

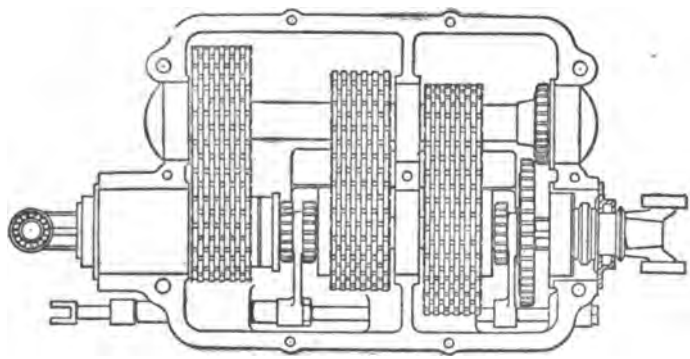

FIG. 80.—SILENT CHAIN CHANGE GEAR.

cars, their more extensive introduction is within the realm of possibility. In all silent chain gear boxes so far built all of the chains run continuously, but it would not be particularly difficult to render all but one of the chains stationary when the direct drive is in action.

In a sliding change gear helical gears may be used for the constantly meshed pair of gears to reduce noise. These put additional end thrust upon the bearings and it is well to keep the angle of spiral moderate, say at 20 degrees, unless thrust bearings are fitted.

CHAPTER IV.

THE PLANETARY CHANGE GEAR.

Planetary or epicyclic gear sets were quite extensively used in automobile transmissions at one time, but have lost much of their popularity. They are still being used, however, on low priced cars of both the pleasure and commercial types. This gear set is much cheaper to manufacture than a sliding gear set, and its operation calls for less skill on the part of the driver. Being used almost exclusively on low priced cars, such refinements in construction as hardened alloy steel gears and radial ball bearings are not employed in planetary gears. Generally these gears are designed to give only two forward speeds and one reverse. It is possible to obtain three forward speeds and one reverse, and the Cadillac Motor Car Co. produced a car with a three speed and reverse planetary gear set for several seasons, but the addition of a third speed introduces considerable complication and entails great frictional loss, and two forward speeds is generally considered the practical limit with this type of gear.

Principle of the Internal Gear Type—There are two general types of planetary gears, viz., those comprising internal gears in their make-up and those consisting solely of spur gears, the latter being sometimes referred to as the "all-spur" type. The principle of the former is illustrated in Fig. 81. *A* is a driving pinion mounted either upon an extension of the engine crankshaft or upon a shaft connected to same, which we will call the driving shaft. This gear is in mesh with two, three or four equal sized planetary pinions *B*, evenly distributed over the circumference of pinion *A*. Pinions *B* are supported upon short shafts secured into the pinion carrier *C*, which may be a disc, drum or spider having a bearing upon the driving shaft. Planetary pinions *B B* also mesh with the internal gear *D*, which latter is also supported by having a bearing on the driving shaft. Two such planetary sets as illustrated in Fig. 81 are required for a two speed forward and reverse gear set.

The low speed forward is obtained in the following manner: Internal gear *D* can be held from rotating by applying a band brake to its circumference. If pinion *A* is then rotated by the motor in a clockwise direction, as indicated by the arrow, pinions *B* will thereby be rotated around their respective axes in a counter-clockwise direction, and since internal gear *D* is held stationary by its brake, they will roll on it and carry pinion carrier *C* around in a clockwise direction; that is, in the same direction as the driving shaft, but at a lower speed. Pinion carrier *C* is in permanent driving connection with the driven shaft.

For the high speed forward the driven shaft of the gear is

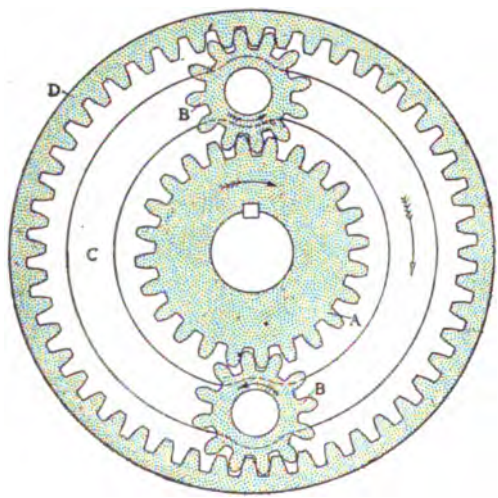

FIG. 81.—INTERNAL GEAR PLANETARY COMBINATION.

directly connected to the driving shaft by means of a friction clutch forming part of the planetary gear set. Hence, by holding internal gear *D* stationary, motion will be imparted to the driven shaft in the same direction as when it is direct connected to the engine shaft by the high speed clutch, but it is revolved at a lower speed.

Calculation of Speed Ratios—Let *a* be the number of teeth in pinion *A*, and *b* the number of teeth in each of pinions *B*. Then the number of teeth in internal gear *D* is evidently $a+2b$. We found that the planetary pinions, together with the pinion

carrier, would rotate right-handedly around the centre of the driving shaft. Now, suppose these pinions to make one complete revolution around the driving shaft. By rolling on the internal gear D they will be revolved around their own axes the number of times their number of teeth is contained in the number of teeth of internal gear D, viz.:

$$\frac{a+2b}{b}=\frac{a}{b}+2 \quad \ldots\ldots (28)$$

However, this number of revolutions about their own axes represents only a part of the motion of planetary pinions B; they have also at the same time made a complete revolution about the axis of the driving shaft, and both these motions must have been imparted to them by driving pinion A. By calculating the motion of the driving pinion required to produce each of these motions in the planetary pinions, and then adding the two motions, we find the number of revolutions of the driving pinion necessary to produce one revolution of the pinion carrier C, and this, of course, is equal to the ratio of reduction.

The angular motion of the driving pinion to produce the first motion of the planetary pinions—that around their own axes—may be found by multiplying the number of revolutions of the planetaries $\left(\frac{a}{b}+2\right)$ by the ratio of the number of teeth in the planetaries to that in the driving pinion, viz., $\frac{b}{a}$, which gives

$$\frac{b}{a}\left(\frac{a}{b}+2\right)=\frac{2b}{a}+1.$$

To produce the planetary motion of one complete revolution about the driving shaft axis it is obvious that the driving pinion must make one revolution in the same direction as that necessary to produce the first motion of the planetary pinions. Hence the total motion of the driving pinion will be

$$\left(\frac{2b}{a}+1\right)+1=\frac{2b}{a}+2, \quad \ldots\ldots (29)$$

which is the expression for the low gear reduction with this type of planetary gear.

Studying this expression, we see that under no conditions can the ratio of reduction be as small as 2. When the planetary pinions have the same number of teeth as the driving pinion, the ratio is 4, and when they have half the number of teeth (as in Fig. 81), the ratio is 3.

For the reverse motion an arrangement of gearing similar to

that shown in Fig. 81 is used. However, in this case the pinion carrier C is held from rotating, being provided with a brake drum to which a brake band can be applied. If, then, the driving pinion A is rotated in a clockwise direction, the planetary pinions B will turn in a counter-clockwise direction around their axes, and the internal gear D will be rotated by them in a counter-clockwise direction around the driving shaft axis. In this case internal gear D is in permanent driving connection with the driven shaft of the gear, which latter is therefore rotated in the opposite direction to the driving shaft. The ratio of reduction is merely the

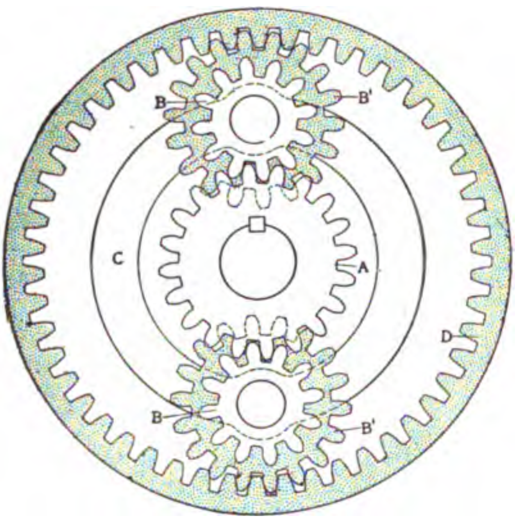

FIG. 82.—INTERNAL GEAR PLANETARY COMBINATION WITH DOUBLE PLANETARY SETS.

ratio between the number of teeth in internal gear D and driving pinion A; that is, using the same designations as in the foregoing, the reverse speed reduction ratio for this type of planetary gear is

$$\frac{a+2b}{a} = \frac{2b}{a} + 1 \qquad (30)$$

In a somewhat modified design, illustrated in Fig. 82, the planetary pinions are made in sets of two of unequal pitch diameter placed side by side and rigidly connected to each other or formed integral, the smaller pinion B being in mesh with driving pinion

A, and the larger one, B', with the internal gear D. Calling the number of teeth in the smaller planetary pinion b and the number of teeth in the larger one b', the reduction ratio for this case when internal gear D is held stationary may be calculated as follows:

The number of teeth in the internal gear is now $a+b+b'$, and the number of revolutions of the planetaries around their axes corresponding to one revolution around the driving shaft axis will be

$$\frac{a+b+b'}{b'}$$

In order to produce this motion the driving pinion must make

$$\frac{b}{a}\left(\frac{a+b+b'}{b'}\right)=\frac{b}{a\,b'}\left(a+b+b'\right) \textit{ revolutions.}$$

To this must again be added one revolution to produce the planetary motion of the planetary pinions, which gives for the low speed reduction ratio for this type of gear

$$\frac{b}{a\,b'}\left(a+b+b'\right)+1=\frac{b}{b'}+\frac{b^2}{a\,b'}+\frac{b}{a}+1 \quad \ldots\ldots\ldots\ldots\ldots (31)$$

From this equation it will be seen that the reduction ratio increases with b and increases as a and b' decrease.

For the reverse motion the pinion carrier is held stationary by means of a brake band. In this case, denoting the angular velocity of internal gear D by unity, the angular velocity of the two planetary pinions will be

$$\frac{a+b+b'}{b'}$$

and the angular velocity of the driving pinion is found by multiplying this by the factor $\frac{b}{a}$ which gives

$$\frac{b}{ab'}\left(a+b+b'\right)=\frac{b}{b'}+\frac{b^2}{ab'}+\frac{b}{a} \quad \ldots\ldots\ldots\ldots\ldots\ldots\ldots (32)$$

When several planetary pinions are used in an internal type of planetary gear, the numbers of teeth in the driving pinion and in the planetary pinions must bear certain relations to each other, else the gears cannot be assembled. Let us take the case of a planetary combination with three pinions. The number of teeth a may be divisible by 3, $a-1$ may be divisible by 3, and $a+1$ may be divisible by 3. Hence there are three different cases which must be investigated separately. We will assume that $a-1$ is divisible by 3. Then we may write

$$a=3x+1$$
$$c=a+2b=3x+2b+1$$

$$\frac{a}{3} = x + \frac{1}{3}\ pitch$$

$$\frac{c}{3} = x + \frac{2}{3}b + \frac{1}{3}\ pitch$$

Referring to Fig. 83, if a driving pinion tooth centre coincides with the line connecting the axes of the driving pinion and the top planetary, then a driving pinion tooth centre is at a distance of ⅓ circular pitch from the line connecting the driving pinion axis with the axis of the right hand planetary pinion.

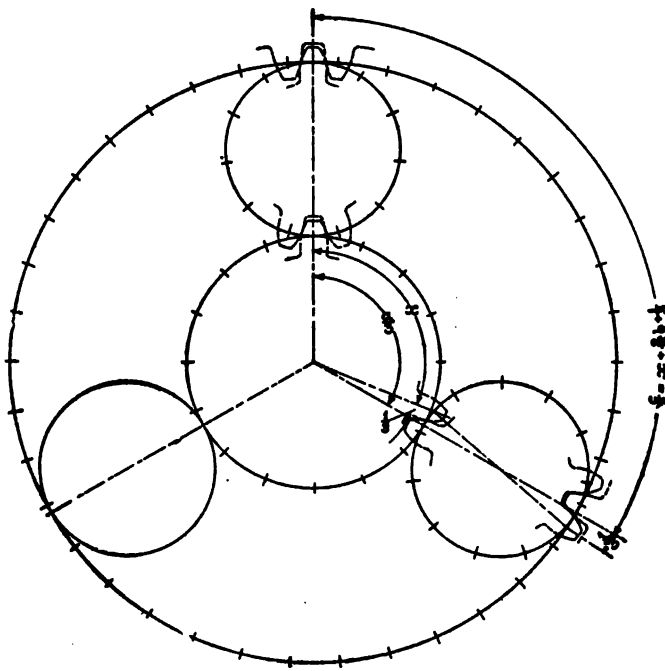

FIG. 83.

When the planetaries have an even number of teeth, two of their tooth centres are opposite. Hence, since a tooth centre on the driving gear is ⅓ pitch ahead of the line joining the driving pinion axis and the right hand planetary axis, a tooth centre of the internal gear will be ⅓ pitch beyond this line produced. Similarly, when the planetaries have an odd number of teeth, a

space will be directly opposite a tooth, hence a space centre of the internal gear will be on the line connecting the axis of the driving pinion to the axis of the top planetary produced, and another space centre of the internal gear ⅓ pitch beyond the line connecting the axis of the driving pinion to the axis of the right hand planetary produced. Therefore, in either case $\frac{c}{3} + \frac{1}{3}$ is an integer which we may denote by n. Substituting the value of $\frac{c}{3}$ we have

$$x + \frac{2b}{3} + \frac{1}{3} + \frac{1}{3} = n.$$

Multiplying both sides by 2

$$2x + \frac{4b}{3} + \frac{4}{3} = 2n$$

But since x and b are integers we may write

$$\frac{b}{3} + \frac{4}{3} = n_1$$

Multiplying each side by 3, we have

$$b + 4 = 3n_1$$

Subtracting 3 from each side

$$b + 1 = 3(n_1 - 1)$$

In other words, the number of teeth in the planetaries must be such that when 1 is added to it, it is divisible by 3.

The following compilation covers every possible case with 2, 3 and 4 planetary pinions:

TWO PLANETARIES.

Both the driving pinion and the planetaries may have either an even or an odd number of teeth.

THREE PLANETARIES.

If a is divisible by 3, b must also be divisible by 3.

If $a - 1$ is divisible by 3, $b + 1$ must be divisible by 3.

If $a + 1$ is divisible by 3, then $b - 1$ must be divisible by 3.

FOUR PLANETARIES.

If a is even, b must be even.

If a is odd, b must be odd.

The object in using more than one set of planetary pinions obviously is to divide the work between these pinions and to reduce the strain on the teeth of the other gears.

Principle of the All-Spur Type—One form of the "all-spur" type of planetary gear is illustrated in diagram in Fig. 84.

It consists of three adjacent, independent gears *A B D* on the driving shaft and three corresponding pinions A^1 B^1 D^1 forming a single rigid planetary unit. Gear *A* is the driving and gear *D* the driven member. For the reverse motion, gear *B*, which is mounted free on the driving shaft, is held from rotation. Assume that the pinion carrier rotates left handedly, causing pinion B^1 to roll on *B*. For one left hand revolution

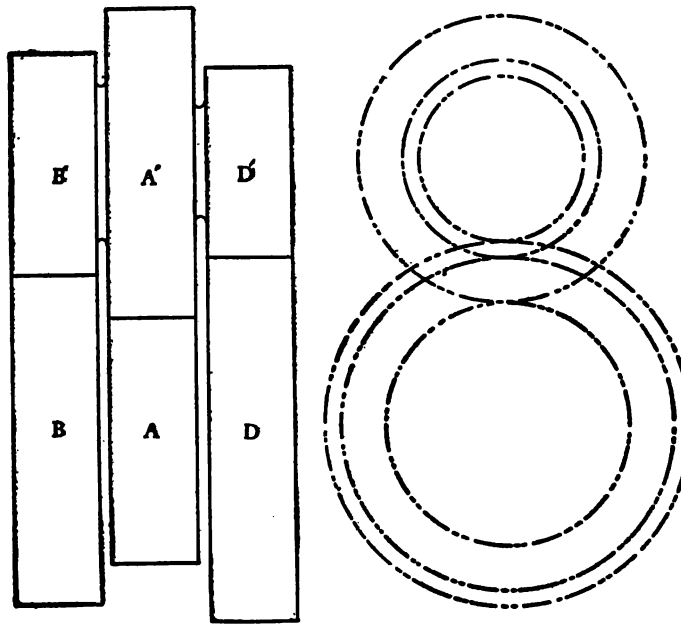

FIG. 84.—DIAGRAMS OF "ALL SPUR" PLANETARY SET.

of the pinion carrier, A^1 B^1 D^1 make $\frac{b}{b^1}$ left hand revolutions around their own axis. This results in *A* making

$$\frac{b}{b^1} \times \frac{a^1}{a} \text{ right hand revolutions}$$

around its axis, which, combined with the one left hand revolution due to the motion of the pinion carrier, gives a total motion of *A* of

$$\frac{a^1\ b}{a\ b^1} - 1 \text{ right hand revolution}$$

which expression gives a positive value if $a^1 > b^1$. Similarly, the motion of the planetary pinions around their own axis causes D to make

$$\frac{b}{b^1} \times \frac{d^1}{d} \text{ right hand revolutions}$$

which combined with the one left hand revolution due to the motion of the pinion carrier gives

$$1 - \frac{b\ d^1}{b^1\ d} \text{ left hand revolutions}$$

for D. If this expression gives a positive value, D will revolve in the reverse direction, and this is the case if $d^1 < b^1$.

The reduction ratio then is

$$r = \frac{\dfrac{a^1\ b}{a\ b^1} - 1}{1 - \dfrac{b\ d^1}{b^1\ d}} = \frac{\dfrac{a^1\ b - a\ b^1}{a\ b^1}}{\dfrac{b^1\ d - b\ d^1}{b^1\ d}}$$

$$\frac{b^1\ d\ (a^1\ b - a\ b^1)}{a\ b^1\ (b^1\ d - b\ d^1)} = \frac{d\ (a^1\ b - a\ b^1)}{a\ (b^1\ d - b\ d^1)}$$

As the sum of any pair of mating teeth must be the same, calling this sum x we have

$$a^1 = x - a$$
$$b^1 = x - b$$
$$d^1 = x - d$$

Substituting in the above equation for the reduction ratio we have

$$r = \frac{d\left[b\ (x - a) - a\ (x - b)\right]}{a\left[d\ (x - b) - b\ (x - d)\right]}$$

$$= \frac{d\ (b\ x - a\ b - a\ x + a\ b)}{a\ (d\ x - d\ b - b\ x + d\ b)}$$

$$= \frac{d\ (b - a)}{a\ (d - b)}$$

Hence the reverse reduction ratio is dependent only on the relative number of teeth of the gears and independent of the planetary pinions. It will be seen at once that this reduction ratio is positive if $b > a$ and $d > b$.

Another possible combination in which only spur gears are used is shown in Fig. 85. *A* is the driving gear, which meshes with planetary pinion *B*. An intermediate pinion B^1 meshes with both *B* and the driven gear *D*. If pinion carrier *C* is held from rotation, driven gear *D* will revolve in the reverse direction to that in which driving gear *A* rotates. The variety of gear arrangements possible is very large but by means of the rules explained in the foregoing the direction of rotation and gear ratio of any combination can readily be determined.

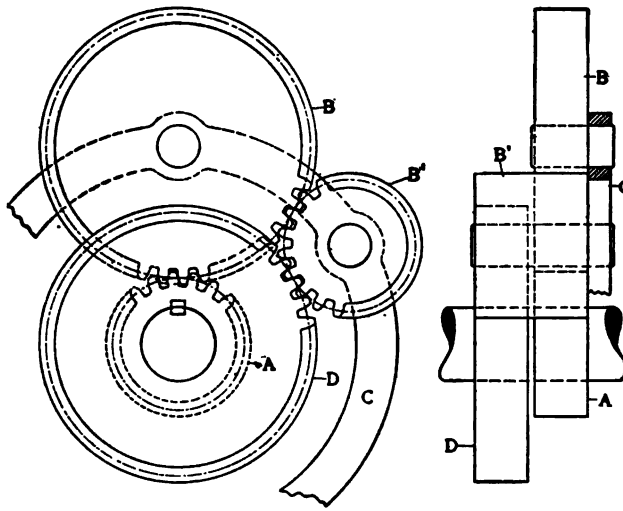

FIG. 85.—ALL-SPUR PLANETARY WITH DOUBLE PLANETARY PINIONS.

Assembly of Internal Gear Type—A sectional view of an internal gear type of planetary gear is shown in Fig. 86. *A* is the driving shaft, which has secured to it the low speed driving pinion *B* and the reverse driving pinion *C*. Pinion *B* meshes with two planetary pinions *D*, which latter in turn mesh with the internal gear *E*. The rim of the latter gear also serves as a brake drum to which a brake band *F* may be applied, so as to hold the gear stationary. The planetary pinions *D* will then revolve around the axis of the driving shaft at a low speed, as already explained, and will carry with them the pinion carrier *G*, which latter is keyed to the hollow driven shaft *H*.

For the reverse, the brake band *I* is applied to brake drum *J*, which serves also as a pinion carrier for the reverse planetary

pinions *K*. The latter mesh both with the reverse driving pinion *C* and the reverse internal gear *L*. Internal gear *L* and pinion carrier *G* are rigidly connected together, not only by pinion pins *M*, as shown in the drawing, but also by bolts between the pinions. Hence, when drum *J* is held in position by brake band *I*, reverse pinion *C* will revolve internal gear *L* through the intermediary of pinions *K* in the reverse (left-handed) direction, and gear *L* will communicate this reverse motion through the intermediary of pinion carrier *G* to driven shaft *H*.

For the direct drive the multiple disc clutch *O* is engaged by

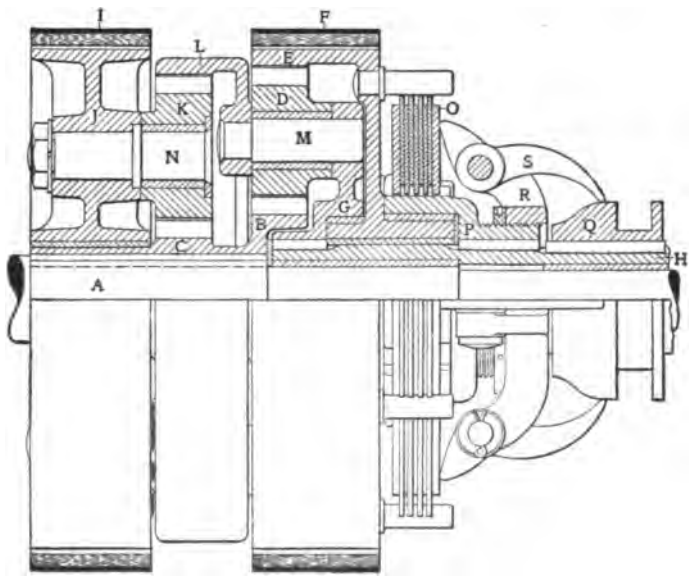

FIG. 86.—ASSEMBLY OF INTERNAL GEAR TYPE OF PLANETARY GEAR SET.

pushing sliding cone *Q* to the left under the clutch dogs *S*. One set of discs of the clutch is driven by means of studs extending from the web of internal gear *E*, and the other set drives through keys of the clutch hub *P*, which is keyed to the driven shaft *H*. When the clutch is engaged internal gear *E* and pinion carrier *G* are locked together, hence planetary pinions *D* cannot rotate around their pins *M*, and driving pinion *B* drives directly through pinions *D*, pinion carrier *G* and shaft *H*. The high speed clutch

can be closely adjusted by turning screw-threaded collar *R* on clutch hub *P*. When the clutch is engaged the entire gear revolves together as a unit, none of its pinions working.

It is interesting to determine the speeds of the different parts while the low gear is in operation. We will assume that *A* revolves right-handedly at 1,000 r.p.m., that *B* has 24 teeth; *D*, 16; *C*, 18, and *K*, 18. The low gear carrier and driven shaft will then revolve (equation 29) at

$$\frac{1{,}000}{\frac{2 \times 16}{24} + 2} = 300 \text{ } r.p.m.$$

Planetary pinions *D* will revolve on their pins at

$$\left(\frac{24}{16} + 2\right) 300 = 1{,}050 \text{ } r.p.m. \text{ } (equation\ 28)$$

One set of clutch discs will be stationary and the other set will revolve at the speed of the driven shaft, viz., 300 r.p.m. Internal gear *L* will revolve right-handedly at 300 r.p.m. and pinion *C* at 1,000 r.p.m. Hence pinion *C* revolves at 700 r.p.m. relative to internal gear *L*, and drum *J* will be revolved right-handedly at

$$\frac{700}{\frac{2 \times 18}{18} + 2} = 175 \text{ } r.p.m.$$

Planetary pinions *K* will rotate on their pins at

$$3 \times (300 - 175) = 375 \text{ } r.p.m.$$

All of these speeds are quite low.

All-Spur Planetary Assembly—Fig. 87 shows a longitudinal sectional view of an all-spur type of planetary gear. *A* is the driving shaft which carries the driving pinion *B*, meshing with planetary pinions *C*. The latter form part of sets of three pinions, which are either made integral or keyed together. *D* is the low speed planetary pinion meshing with low speed gear *E*, which latter is secured to driven shaft *F*. By applying brake band *G* to the combined pinion carrier and brake drum *H*, the planetary pinions are held stationary in space and act like a back gear. Pinion *B*, rotating right-handedly, turns pinions *C* and *D* on their pin left-handedly, and pinion *D* turns pinion *E* and driven shaft *F* right-handedly; that is, in the same direction as driving pinion *B*. For the reverse, brake band *I* is applied to brake drum *J*, which has the reversing pinion *K* keyed to it. Gear *K* being thus held stationary, when pinion *B* is rotated by the engine, planetary

pinion *L* is forced to roll on *K* in planetary fashion in a left-handed direction, carrying the pinion pin *M* and pinion carrier *H* with it.

The direct drive is obtained by engaging the high speed clutch *N*, which locks the reversing gear *K* to driving shaft *A*, and since two unequal gears (*B* and *K*) are now secured to shaft *A*, the planetary pinions are locked against axial motion and the whole gear revolves as a unit.

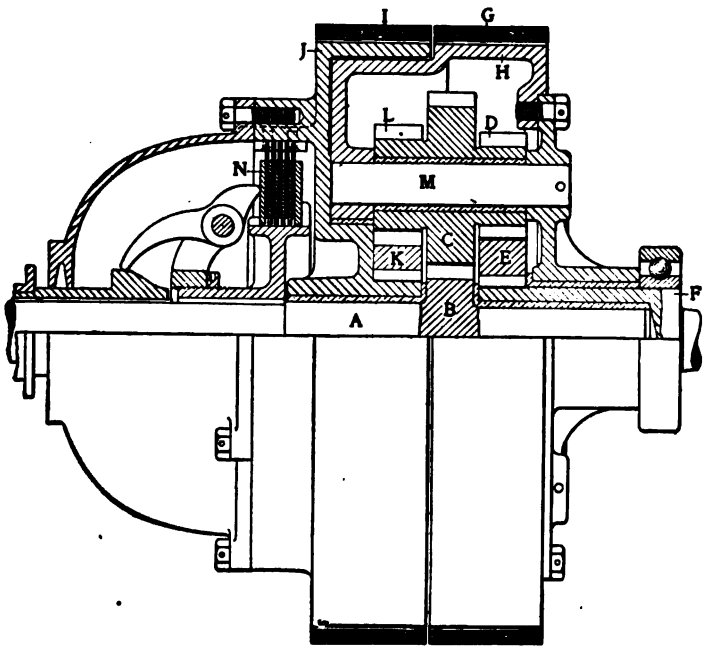

FIG. 87.—ASSEMBLY OF "ALL-SPUR" TYPE OF PLANETARY GEAR SET.

In an "all-spur" combination, instead of applying the power through one of the central pinions and transmitting it through the pinion carrier, it may be applied through the latter and transmitted through one of the central pinions. The Ford change gear, illustrated in Fig. 88, is of this type. In this case the flywheel rim *A* serves as the pinion carrier and driving member,

having lateral studs secured into it which carry triple planetary pinions. Gear *B* is the driven member, being keyed to the hub of clutch drum *C*, which in turn is secured to driven shaft *D*. By applying a brake band to drum *E*, gear *F* is held stationary, pinion *G* rolls on it, and the smaller pinion *H* causes gear *B* to turn slowly in the same direction as pinion carrier *A*. By applying a brake band to drum *I* gear *J* is held stationary, pinion *K* rolls on it, and the larger pinion *H* turns gear *B* slowly in the reverse direction. For the high gear or the direct drive the friction clutch

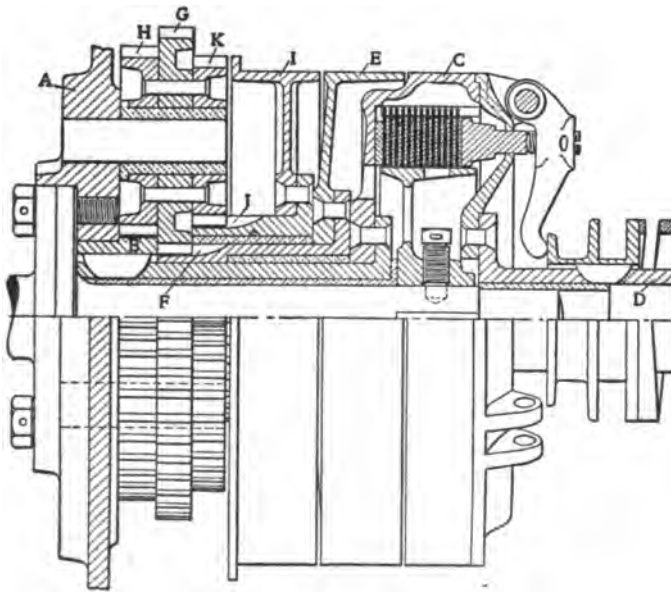

FIG. 88.—FORD PLANETARY GEAR SET.

locks the clutch drum *C* to the engine tailshaft, and the gear rotates as a unit.

Gear Stresses and Bearing Pressures—The Pressure on the pitch line of the driving pinion can be calculated from the engine dimensions by the method already explained. If there are several planetary pinions in mesh with the driving pinion, then the total pressure on the pitch circle of the driving pinion must be divided by the number of these planetary pinions in order to get the pressure on one tooth. The necessary width of face of the teeth can then be calculated by the formula for the strength of

gear teeth given in the previous chapter, allowing a stress in the teeth (of machinery steel gears) at full engine load of about

8,000 pounds per square inch for 1,400 feet per minute
10,000 pounds per square inch for 1,200 feet per minute
12,000 pounds per square inch for 1,000 feet per minute
14,000 pounds per square inch for 800 feet per minute

pitch line velocity corresponding to 1,000 feet per minute piston speed. For nickel steel gears the stress in the teeth can be made 20 per cent. greater. In this connection it should be pointed out that it is customary to use ten pitch gears in planetary gear sets for very small powers, say up to 15 horse power, and eight pitch gears for gear sets of from 15 to 30 horse power. In the few instances where planetary gears have been used for larger powers six pitch teeth have been used.

Now, let it be required to calculate the dimensions of a planetary gear for a double cylinder engine of 4½ inch bore by 4 inch stroke. The calculations are somewhat different for the internal type of planetary gear and the all-spur type, and we will carry the calculation through, first for the one and then for the other. As far as the strength of gears and the bearing surface required for the planetaries are concerned, the stresses and pressures during low gear operation, of course, are much more important than the stresses and pressures corresponding to the reverse motion, for the reason that the reverse is never used continuously for any length of time. Suppose that a gear reduction of 3 is desired for the low speed forward.

The normal-speed torque of our motor is

$$\frac{2 \times 4 \times 4\frac{1}{2}^2 \times 65}{192} = 55 \textit{ pounds-feet.}$$

We will first carry the calculation through for the internal type of planetary gear. In order that we may get the desired reduction ratio the driving pinion and planetary pinions must be made with such numbers of teeth, a and b, respectively, that

$$\frac{2b}{a} + 2 = 3,$$

hence

$$\frac{b}{a} = 0.5.$$

The smallest practical number of teeth in a pinion is 12, and it is well to use a few more. We will make $b = 14$ and $a = 28$. Also, we will use 8 pitch standard 14½ degree involute teeth. Hence the pitch diameter of the driving pinion is 3½ inches and

the pitch radius 1¾ inches. Since the torque that must be transmitted by this pinion is 55 pounds-feet, the pitch line pressure is

$$\frac{55 \times 12}{1\frac{3}{4}} = 377 \text{ pounds.}$$

We will assume that two oppositely located planetary pinions are used, so this pressure is exerted by two teeth of the driving pinion, and the pressure of each tooth is

$$\frac{377}{2} = 188.5 \textit{ pounds.}$$

At 1,000 feet piston speed per minute the 4 inch stroke motor turns at

$$\frac{1{,}000 \times 12}{2 \times 4} = 1{,}500 \textit{ r. p. m.,}$$

and the pitch line velocity of the driving pinion is

$$\frac{1{,}500 \times 3.5 \times 3.14}{12} = 1{,}375 \textit{ ft. p. m.}$$

Hence we may figure on a stress of 8,000 pounds per square inch in the teeth. Then, according to Lewis' equation,

$$188.5 = 8{,}000 \times 0.4 \times f \times 0.072,$$

and

$$f = \frac{188.5}{8{,}000 \times 0.4 \times 0.072} = 0.81 - \textit{say, } \frac{13}{16} \textit{ inch.}$$

The tangential force P on one of the planetary pinions we found to be 188.5 pounds. As indicated in Fig. 89, this force is exerted by the driving pinion on the planetary pinion, and there is an equal reaction of the internal gear on the opposite side of the planetary pinion. Hence the pressure on the bearing of the planetary pinion is

$$188.5 + 188.5 = 377 \textit{ pounds.}$$

In a gear of the internal planetary type it is difficult to provide large enough bearing surfaces, and the unit pressure on the pinion pins is usually in the neighborhood of 600 pounds per square inch. This unit pressure in our case calls for a bearing surface of

$$\frac{377}{600} = \tfrac{5}{8} \textit{ square inch.}$$

If we make our pin ⅝ inch in diameter it must have a length of 1 inch, or slightly more than the face of the gear.

It is customary to make the pinions of the reverse combination of the same width of face as the pinions of the low gear combination.

A reduction of 3 to 1 is practically the lowest obtainable with

this type of gear, because for lower reductions the planetary pinions become very small and their rotative speeds excessively high. On the other hand, with only two speeds forward the low speed ratio is generally wanted comparatively small, between 2 and 3, so that the step from high to low speed may not be too great.

Calculation of "All Spur" Type—With the usual "all spur" type we obtain our low forward speed by means of a back gear. The low gear ratio should be approximately 3:1. If two sets of planetary pinions are to be used then each of the central gears must have an even number of teeth. Gear combinations which give the required reduction ratios can be

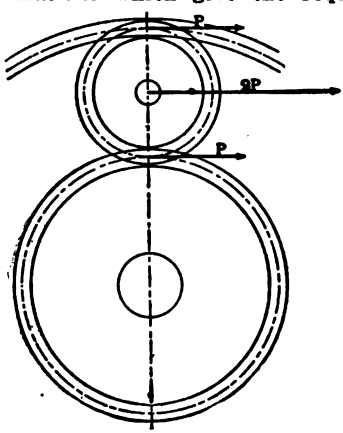

FIG. 89.—TANGENTIAL AND BEARING PRESSURES IN INTERNAL GEAR TYPE OF PLANETARY.

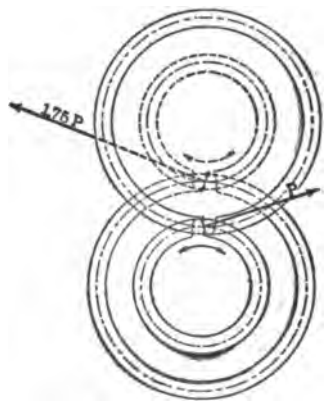

FIG. 90.—TOOTH PRESSURES IN ALL-SPUR TYPE OF PLANETARY.

found only by trial. In selecting combinations it must be remembered that d must be greater than b and b greater than a and that the sums of the teeth of all mating pairs must be alike. A suitable combination is as follows:

$$a = 16 \qquad b = 28 \qquad d = 32$$
$$a^1 = 28 \qquad b^1 = 16 \qquad d^1 = 12$$

Since the low gear ratio is equal to $a^1\ b/\ a\ b^1$ we get for it

$$\frac{28 \times 28}{16 \times 16} = 3.06$$

The expression for the reverse ratio is

$$\frac{d\,(b-a)}{a\,(d-b)}$$

hence its value is

$$\frac{32\ (28-16)}{16\ (32-28)} = 6$$

This reverse ratio is somewhat greater than usually employed, but a great reduction seems to be desirable as it insures safety in backing. With the usual sliding gear transmission the reverse gear ratio is always made as great as possible.

The pitch radius of the 16 tooth 8 pitch driving pinion is 1 inch, hence the pitch line pressure is

$$\frac{55 \times 12}{1} = 660 \textit{ pounds.}$$

Of this one-half, or 330 pounds, comes on one tooth. The pitch line velocity is

$$\frac{1{,}500 \times 2 \times 3.14}{12} = 785 \textit{ ft.p.m.,}$$

hence we may allow a tooth stress of 14,000 pounds per square inch. Inserting in the Lewis formula we have

$$330 = 14{,}000 \times 0.4 \times f \times 0.077$$

and

$$f = \frac{330}{14{,}000 \times 0.4 \times 0.077} = 0.755, \textit{ say } \tfrac{3}{4} \textit{ inch.}$$

In this case the low speed motion is not transmitted through the gear carrier, and the whole force of the drive does not come on the pinion pin. In Fig. 89 are shown the pressure of the driving pinion tooth on the planetary pinion tooth and the reaction of the stationary gear tooth on the tooth of the second planetary pinion.

The tangential pressure on the driving gear we found to be 660 pounds. The tooth reaction between the driving pinion and the first planetary is

$$\frac{330}{\cos 20^\circ} = 350 \textit{ pounds.}$$

The tooth reaction between the second planetary pinion and the stationary pinion is

$$\frac{28}{16} \times 350 = 612 \textit{ pounds.}$$

These two pressures make an angle of 140 degrees with each other, and their resultant is found graphically to be 410 pounds.

In gears of this type the unit pressure can be made about 200 pounds per square inch, hence we require

$$\frac{410}{200} = 2.05 \textit{ square inches}$$

bearing surface. Allowing a distance of ⅛ inch between pinions, the total length of the pin bearing will be 2½ inches, and the diameter of the pin should be

$$\frac{2.05}{2.5} = 0.82, \textit{ say, } \frac{13}{16} \textit{ inch.}$$

Constructional Details—Owing to the fact that in an all-spur planetary only a short key could be used for securing the driving pinion to its shaft, it is advisable to forge this pinion integral with the shaft so as to avoid possible trouble from a loose key. In the older designs of planetary gears the planetary pinions revolved on pins supported at one end only. This construction leaves much to be desired, for the reason that it permits considerable flexure of the pinion pins and leads to rapid wear of the pinion bushings, and consequent noisy operation. A specially weak point often found in connection with this construction was the method of fastening the pin to the pinion carrier. The pin was somewhat reduced in diameter at one end, and the reduced portion was threaded to screw into the pinion carrier. This makes the section of the pin weakest at the very point where the maximum stress occurs. It is much preferable to turn the pin with a small flange to provide a shoulder for the joint, and have the diameter at the joint the same as inside the pinion. However, pinion pins supported at both ends are to be recommended in every case, because of the more rigid support they give to the pinions. In determining the diameter of the pins it is advisable to calculate the stresses occurring in them under full load, and the deflection produced thereby.

Brakes—In the design of the brake for holding rotary parts stationary for the low speed and the reverse, efforts should be made to keep down the radial load on the bearing of the brake drum due to the brake pull, so as to reduce the wear of that bearing. It is quite possible to entirely eliminate this radial load by dividing the brake bands into halves, with the two points of anchorage located diametrically opposite on the brake circle, and dividing the brake pull equally between the two bands. However, owing to the slightly greater complication in the operating mechanism this is never done in practice. One manufacturer uses disc brakes instead of band brakes, thereby entirely eliminating radial brake load.

Since in a shaft driven car the axis of the gear lies in the direction of the length of the car and the brake operating shaft transverse thereto, the brake bands are usually operated by means of face cams, as illustrated in Fig. 91. The brake band is made of steel and lined with leather or fibre. Lugs are riveted to its ends, which are drilled to pass over the operating shaft.

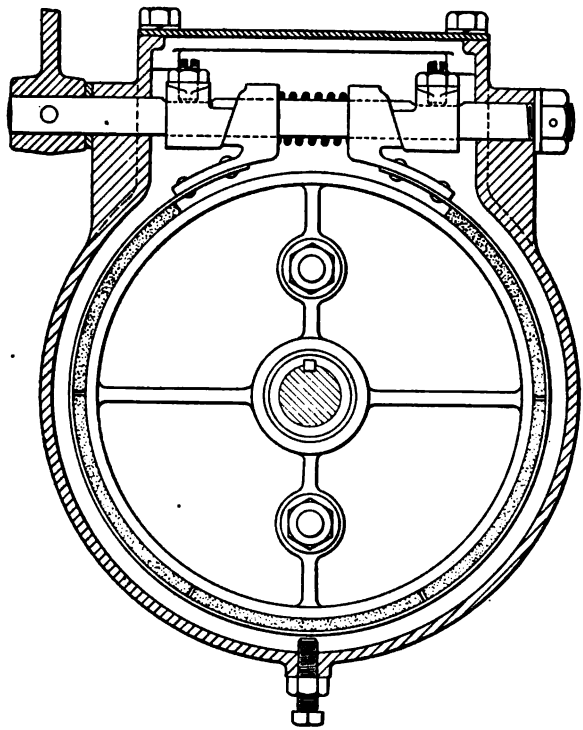

FIG. 91.—BRAKE CONSTRUCTION FOR PLANETARY GEAR.

These lugs are provided with cam faces, and corresponding face cams are secured to the shaft, so that when the latter is rotated in a particular direction the ends of the band are forced together and the band is contracted upon the drum. A coiled spring between the lugs of the band releases the latter when the driver removes his foot from the pedal by means of which the particu-

lar speed is engaged. Any wear of the friction lining can be compensated by adjustment of the face cams on their shaft.

One common fault in planetary gears is that the brake bands are not fully released but drag when not in use. To prevent this the ends of the band should be allowed considerable motion, and an adjustable set screw should be provided at a point opposite the ends of the band to act as a stop and limit the release motion at that point.

In some planetary gears the brakes are exposed, but it is certainly preferable to enclose the entire gear inclusive of the brakes.

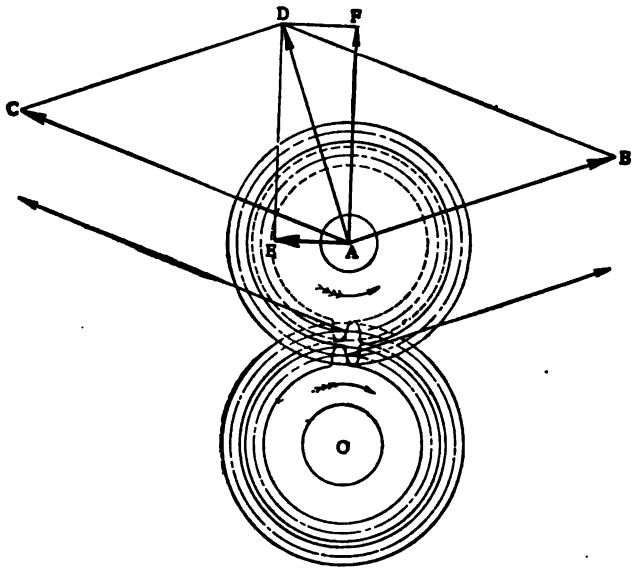

FIG. 92.—GEAR AND BEARING PRESSURES IN AN ALL-SPUR PLANETARY SET.

Efficiency of Operation—Although, so far as the author has been able to learn, no accurate efficiency tests of planetary change speed gears have ever been made, this type of gear has a poor reputation in respect to efficiency. Of course the speeds which involve no planetary motion, such as the low speed in a simple "all-spur" planetary gear (Fig. 87), should be as efficient as the corresponding gear in a sliding gear set, provided mechanical design and workmanship are the same. But the efficiency of such

a combination as that of the reverse in an all-spur combination is quite low, as may easily be shown. The losses are due partly to tooth friction and partly to bearing friction. Such a combination is represented diagrammatically in Fig. 92, and in order to somewhat exaggerate the conditions resulting in inefficient operation, the two planetary pinions are shown to be of nearly equal pitch diameter. The gear tooth pressures are drawn in making an angle of 20 degrees with the plane of the gear axes, 15 degrees of which represent the tooth flank angle and 5 degrees the friction angle. We found in the previous chapter that the load on the bearing of a spur gear is equal in magnitude and direction to the load on the gear teeth, and since the two planetary pinions have a common bearing, we can transfer the tooth pressures to the bearing axis. This has been done in Fig. 92, *A B* representing the bearing load due to the pressure of the driving pinion and *A C* the bearing load due to the reaction of the stationary gear. *A D* is the resultant of these two and represents the actual load on the pinion pin. It is hardly necessary to emphasize the fact that a pressure in the direction *A D* applied to the pinion pin does not act very advantageously in turning the pin around centre *O*. This pressure can be resolved into two components, a radial one *A F* and a tangential one *A E*. The latter component represents useful turning force impressed upon the pinion carrier at the radius of the pinion pin axis with the driving shaft axis as a centre. The useful work is proportional to this force or pressure, which, it will be seen, is quite small, while the gear losses are proportional to the much greater forces *A B* and *A C* and the bearing loss in the pinion pin bearings is proportional to *A D*, also much greater than *A E*. In ordinary spur gearing the power transmitted is directly proportional to the tooth pressure, as are all of the losses. In the above planetary combination the tangential (useful) component of the pinion pin load becomes zero as the two planetary pinions become equal.

The chief advantage of the planetary gear set is that on the direct drive it consumes absolutely no power, having no bearings then in operation, and its weight, which revolves, adds to the flywheel effect, tending to steady the engine motion. This advantage can be made the most of on cars provided with relatively powerful engines, making it possible to drive on the high gear under all ordinary road conditions, so that the low gear is needed only in starting and on extremely steep hills.

CHAPTER V.

THE FRICTION DISC DRIVE.

Types of Friction Drives—Undoubtedly the simplest of all variable transmission mechanisms for gasoline automobiles is the so called friction drive. There are several types of frictional transmission mechanisms, and they may be roughly classified as follows: Disc and wheel, multiple discs and wheels, bevel wheels, plain wheels and grooved wheels. The first class mentioned is the only one extensively used. This change speed mechanism (*A*, Fig. 93) consists of a disc *A* carried on an extension of the engine shaft, and of a mill board or fibre-faced friction wheel *B*, which can be slid along a cross shaft and brought into frictional engagement with the disc *A* at a greater or smaller distance from its centre. The ratio between the speeds of revolution of wheel and disc is substantially equal to the reciprocal of the ratio between the diameter of the wheel and the diameter of the mean contact circle on the disc. By moving the wheel from the centre of the disc outward the speed of the wheel can be changed from nothing to the maximum by infinitesimal increments, and by sliding the wheel over to the opposite side of the disc its direction of motion may be reversed. Before the wheel is slid in the direction of its axis it must be disengaged from the disc, which is accomplished either by moving the bearings of the cross shaft in planes perpendicular to their axis or by moving the bearing directly behind the disc in the direction of its axis. After the wheel has been slid to the desired position, wheel and disc are again brought into frictional engagement by the reverse operation. This so called friction disc drive, therefore, serves not only as a speed changing and reversing gear, but also performs the function of a friction clutch. It possesses a number of advantages, viz., extreme simplicity, low cost of construction and maintenance, absolutely silent operation, and the fact that it furnishes an unlimited number of speed gradations. Among the weak points of this transmission are the unavoidable loss of power due to slipping at

the contact surfaces and the fact that the frictional conditions are impaired by oil, mud, etc., on the frictional surfaces. Owing to the necessary bulk of this mechanism it is impossible to properly enclose it.

Before taking up the technical discussion of this drive it will be well to briefly describe some of the numerous varieties of friction transmissions used in automobile work. Most of the drives described in the following have been used only in single cases, and none can be regarded as in common use in the industry.

B in Fig. 93 illustrates a drive consisting of two oppositely located friction discs and two friction wheels between them. Each wheel is in frictional contact with one disc only, and each has a separate drive to one of the rear road wheels. It will be noted that one of the cross shafts is set slightly farther to the rear than the other, so that each wheel may contact with one disc and clear the other. As compared with the single disc drive the construction has the advantage—purchased at the cost of some complication—that the over-all dimensions for a certain transmission capacity are less and that the need of a differential gear is dispensed with. At least no differential is used with this construction, although it would seem that the certainty of steering might be somewhat affected by its absence.

At *C* is shown the Seitz design of friction drive, which comprises a single disc and two pairs of friction wheels, one pair on either side of the disc. Each friction wheel has its individual shaft, and by means of a suitable linkage the bearings of the shafts to one side of the centre of the disc can be moved together so the wheels on them will pinch the disc, thus establishing frictional driving connection with it. One pair of wheels serves for the forward drive and the other for the reverse, the latter pair being fixed on their respective shafts, thus giving only a single reverse reduction. Power is transmitted to a transverse jackshaft by means of roller chains which run over sprockets on each of the two friction wheel shafts corresponding to one direction of motion. The chief advantage of this construction is that there is no end thrust on the disc and its shaft, hence no provision need be made to take it up on thrust bearings, and there is no chance of the frame being distorted by the "off centre" pressure on the disc.

The arrangement illustrated at *D* combines a direct drive for use under all ordinary road conditions. For slow speed and reverse operation the power is transmitted from the driving disc *A* (which may be the engine flywheel) to the two fraction wheels

BB, and thence to the friction wheel *C*, which is slidably mounted on the driven shaft. Wheel *C* is shown in the position corresponding to the reverse motion. Pushing it toward the driving disc past the centres of wheels *BB* gives the forward motion, the speed gradually increasing until wheel *C* is close to the driving disc *A*. Then the side wheels *BB* are moved apart out of contact with wheel *C*, and the forward conical projection of the latter is forced into a conical recess formed in the flywheel rim, these

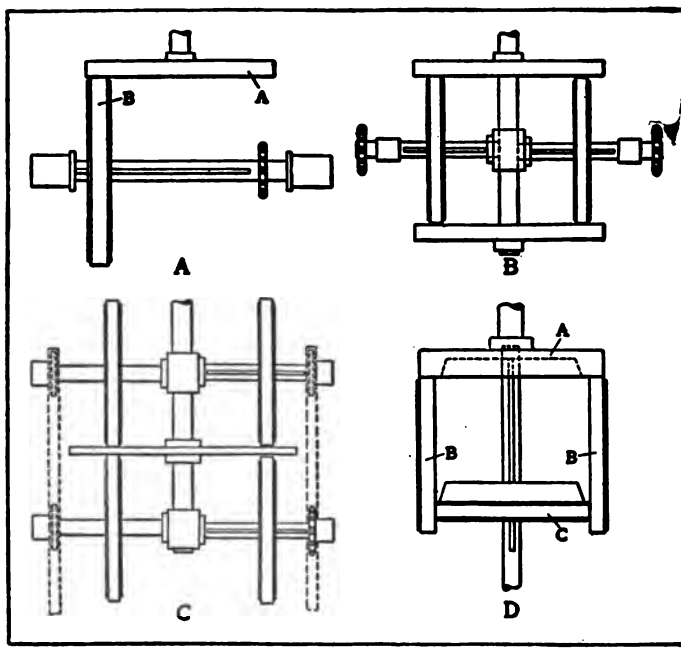

FIG. 93.—TYPES OF CONTINUOUSLY VARIABLE FRICTION DRIVES.

parts acting as a cone clutch and connecting the driven to the driving shaft for the direct drive. This obviates the frictional loss inherent in the operation of the disc and wheel and also makes the drive positive.

In all of the friction drives so far described the transmission ratio is continuously variable. However, there are other frictional drives which do not possess this feature of an "infinite

number of gear changes," giving generally only two forward speeds.

These change gears are used on account of their simple construction and quiet operation. Among these is the friction cone type, shown at *A* in Fig. 94. This drive comprises two driven members *C* with double conical friction surfaces and three driving cones *A*, *B* and *R*, all mounted slidably on a feathered driving shaft. *A* gives the high speed forward, *B* the low speed forward, and *R* the reverse, engagement being effected by moving the driving cones axially into contact with the driven cones.

Counterparts of sliding and planetary change speed gears containing friction wheels instead of gear pinions have also been

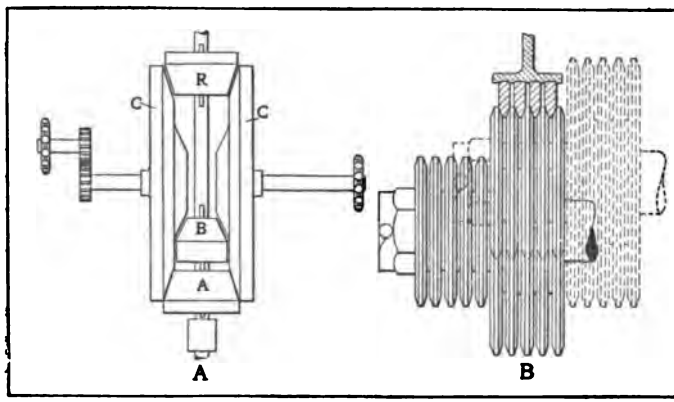

FIG. 94.—TYPES OF STEPPED FRICTION DRIVES.

used, but have been discarded. *B*, Fig. 94, illustrates the grooved friction wheel drive used by Charles E. Duryea on light vehicles. Less normal pressure between wheels is required when the frictional surfaces are formed with *V* grooves than when they are smooth, but to balance this there is somewhat greater loss at these surfaces.

Materials—The disc of a friction disc drive always has a metallic surface. Aluminum is claimed to possess superior frictional qualities and is used by one concern manufacturing friction driven automobiles, which has a patent on its use for this purpose. However, cast iron is also successfully used. The wheels are always faced with some kind of fibrous material which is more or less compressible and has a relatively high coefficient of friction in contact with metal. Mill board is

commonly employed, and is sometimes indurated with a tarry substance to improve its frictional qualities. The friction coefficient between cast iron and mill board under ordinary conditions varies between 0.25 and 0.30. The facing material is cut into rings which are assembled between steel flanges.

Theoretical Efficiency—It is obvious that the motion of the wheel rim on the face of the disc cannot be a pure rolling motion, since both sides of the wheel have the same circumference, whereas the outer circumference of the contact ring on the disc is considerably longer than the inner circumference. This condition entails sliding motion and consequent frictional loss. An analytical investigation of this loss has been made by Professor

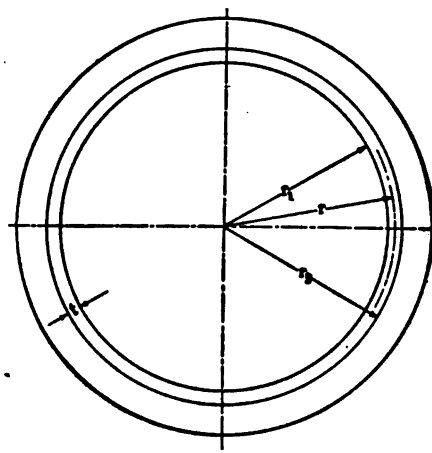

FIG. 95.

Benjamin Bailey (THE HORSELESS AGE, July 6, 1910), whose method we may here follow.

Referring to Fig. 95, let r_1 be the inner and r_2 the outer radius of the contact ring on the disc. Imagine that the disc is stationary and that the wheel rolls around it. A little consideration will show that the total slippage during one revolution will be the same as if the wheel were rotated once around the centre point of contact on the disc. This occurs when the wheel is at the entre of the disc. Let P be the frictional force on the circumference of the wheel, and let it be supposed that the normal pressure between disc and wheel is just sufficient

to prevent slippage of the wheel. The frictional force per inch in width of the contact ring then is $\frac{P}{r_2 - r_1}$ pounds. In Fig. 96 the circle of diameter t represents the whole area over which the slipping takes place. Imagine that the wheel is stationary at the centre of the disc and that the latter is turning under it. When the disc then makes one complete revolution, every portion of the circle of diameter t is passed over twice by an element of the wheel circumference. Now, consider an infinitesi-

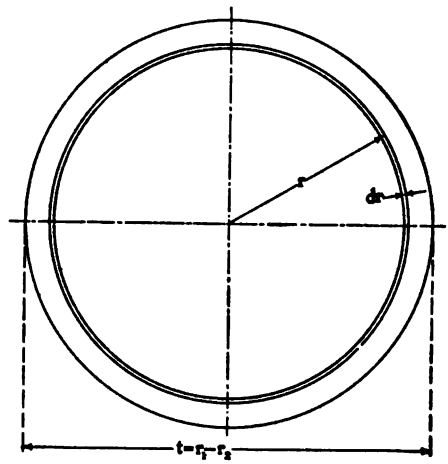

FIG. 96.

mal ring of width dr. If W represents the frictional work done on the entire circle during one revolution, then the work done on the ring dr is

$$dW = \frac{P}{r_2 - r_1} 4\pi r\, dr.$$

Integrating this between the limits $r = o$ and $r = (r_2 - r_1)/2$ we get

$$W = \frac{4\pi P}{r_2 - r_1} \int_0^{(r_2 - r_1)/2} r\, dr = \frac{\pi P}{2}(r_2 - r_1).$$

This, therefore, represents the power lost in friction during

each revolution of the disc. The useful work transmitted during one revolution is $2\pi P\frac{r_1+r_2}{2}=\pi P(r_1+r_2)$

hence the efficiency is $e=\dfrac{\pi P(r_1+r_2)}{\pi P(r_1+r_2)+\frac{\pi P}{2}(r_2-r_1)},$

which may be reduced to $\dfrac{2(r_1+r_2)}{3r_2+r_1}$

Let t be the width of contact of the wheel and r the radius from the centre of the disc to the middle point of contact, then the formula for the efficiency may be written

$$e=\frac{1}{1+\frac{t}{4r}} \quad \ldots\ldots(33)$$

With a width of contact equal to 1½ inches and a mean radius of contact of 9 inches (typical of high speed operation on a moderate sized car), the efficiency figures out to about 96 per cent. With a mean radius of contact of 3 inches (low gear) the efficiency figures out to 88.8 per cent.

In actual practice the normal pressure between disc and wheel is always greater than that required to just keep the wheel from slipping, and may be far greater. This, of course, will proportionately increase the loss due to slippage. If the ratio of the actual normal pressure to that required to just prevent slippage be k, then the efficiency is

$$e=\frac{1}{1+\frac{kt}{4r}} \quad \ldots\ldots(34)$$

This efficiency, moreover, is only an ideal efficiency, not taking account of bearing losses and any slippage there may be beyond that required by the difference in the lengths of the inner and outer circumference of the contact ring on the disc.

Dimensions of Disc and Wheel.—From equation (33) it will be seen that the efficiency increases with the mean radius of contact and as the width of contact decreases. Hence it is desirable to use as large a disc as constructional limitations permit and make the wheel as narrow as the rigidity and wearing qualities of the facing will allow of. For pleasure cars a disc diameter of 20 inches is about the limit, because the motor must be located

low for the sake of stability, and yet a ground clearance of about 10 inches must be maintained. In commercial cars, in which the power plant can be placed somewhat higher, the disc may be as large as 24 inches in diameter. The wheel is generally made of about the same diameter as the disc, so that when it is in the position farthest from the centre of the disc the power is transmitted without change of speed.

Suppose that a friction drive is to be designed for a four cylinder 4x5 inch touring car. The disc would be made, say, 20 inches in diameter and the friction wheel rim 1¼ inches wide. This would make the mean radius of the contact ring, with the wheel in the extreme high speed position, 9⅛ inches. The above mentioned motor develops a normal-speed torque of 108 pounds-feet. Hence the force to be transmitted at a radius of 9⅛ inches is

$$\frac{12 \times 108}{9\frac{1}{8}} = 142 \text{ pounds,}$$

and figuring on a friction coefficient of 0.3, the necessary normal pressure is

$$\frac{142}{0.3} = 473 \text{ pounds.}$$

On the other hand, the friction device must also be capable of transmitting the full power of the motor when the wheel is at only, say, 3 inches mean distance from the centre of the disc, for low speed operation. The frictional force then is

$$\frac{12 \times 108}{3} = 432 \text{ pounds,}$$

and the required normal pressure

$$\frac{432}{0.3} = 1440 \text{ pounds.}$$

Hence the mechanism for applying the wheel to the surface of the disc must enable the driver to exert at least this pressure.

It is obvious that the torque which may be transmitted by a friction wheel and disc is directly proportional to the diameter of the disc, and it also increases with the width of face of the wheel, provided the latter is not too large. In determining the dimensions it is well to make the disc as large in diameter as is permissible from the viewpoints of height of centre of gravity and ground clearance required, and then give the wheel a width of face

$$f = \frac{T}{4D} \qquad (35)$$

where T is the maximum torque of the motor (Table 1) and D

the outside diameter of the disc. In no case should f be greater than $\frac{D}{10}$.

Wheel Sliding Mechanism.—The friction wheel is arranged on a cross shaft either of the fluted type or provided with one or more long keys. The hub of the wheel is formed with a groove for a sliding collar for connection to the operating lever. Owing to the great range of motion of the wheel, long armed levers must be employed in the operating mechanism. Fig. 97 illustrates a typical arrangement of this mechanism. The position

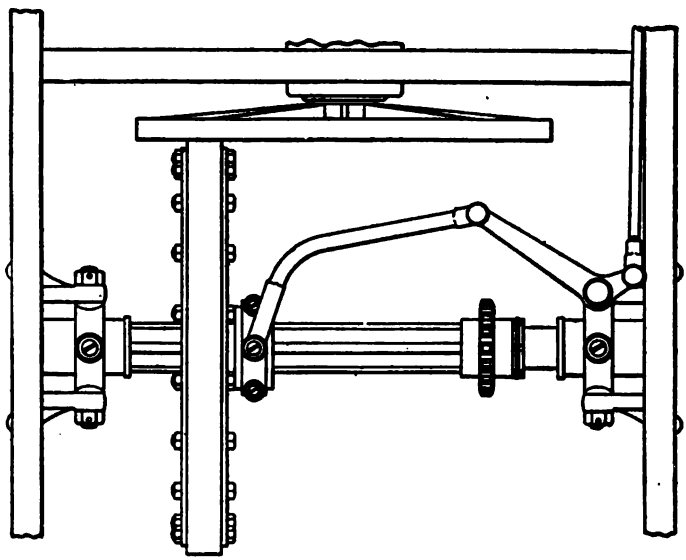

FIG. 97.—WHEEL SLIDING MECHANISM.

of the friction wheel is controlled by a hand lever moving over a notched quadrant.

Friction driven cars practically always have a final drive by chain, either one or two chains being used. With the single chain the sprocket pinion is fixed to the shaft of the friction wheel just beyond the range of motion of the wheel on the reversing side, and the shaft is carried in bearings secured to the frame side members. With the double chain drive the differential gear must be incorporated in the cross shaft. The friction

wheel then slides on a hollow shaft which is secured to the housing of the differential gear, the cross shaft proper being divided and each part fastened to one side gear of the differential. There should be an extension of the hollow shaft beyond the differential so that this shaft may be supported in bearings hung

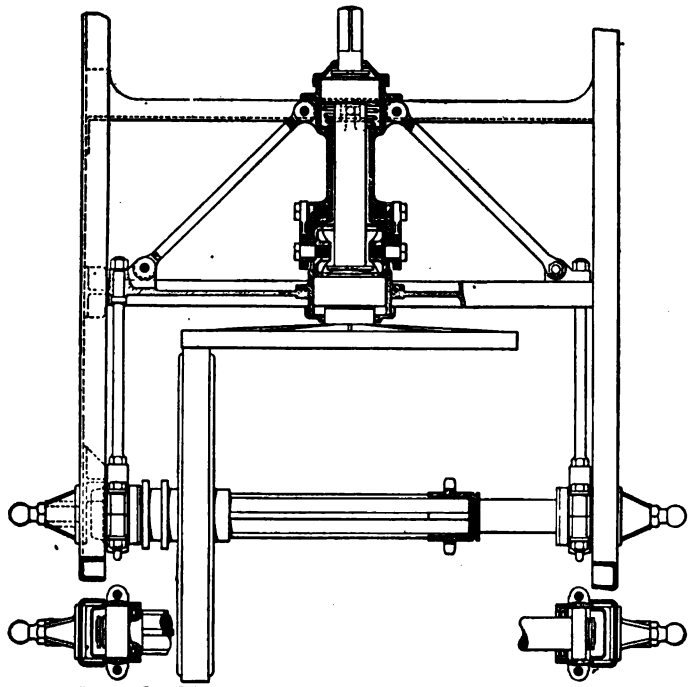

FIG. 98.—MOUNTING FOR WHEEL AND DISC SHAFTS. (JAKOB'S DESIGN.)

from the side frame members, which relieves the differential or inner shafts of much strain.

Means for Engaging Wheel and Disc—Considerable importance attaches to the method of mounting the bearings for the disc shaft and of taking up the various stresses due to the normal pressure between the disc and wheel. As has already been shown, these stresses are of considerable magnitude, and they may produce serious distortions of the frame unless suitable means are provided for taking them up. Fig. 98 illustrates a design due to Victor Jakob. The cross shaft is supported in

two brackets riveted to the frame, being provided with ball bearings mounted in spherical housings. If required for renewing the facing of the wheel, the cross shaft can easily be removed toward the rear after the caps have been taken off.

In order to avoid twisting of the frame side members, due to the reactions between disc and wheel, the bearings are placed close to the frame and the axis of the shaft intersects the neutral axis of the frame member. This arrangement necessitates a somewhat higher location of the motor than customary with gear drives, but this is required, anyhow, in order to obtain the necessary road clearance under the disc and wheel.

From each of the cross shaft bearing brackets a tension rod

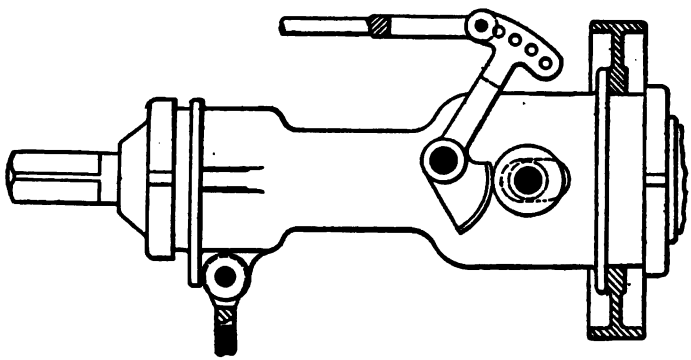

FIG. 99.—CAM MECHANISM FOR APPLYING DISC TO WHEEL.

is run straight forward to a cross member which is riveted to the frame. The centre part of this cross member is widened out and has a hole in the web so as to accommodate a barrel which serves as a support for the disc shaft, the barrel being fastened to the cross member by an integral flange. The front end of the barrel is supported on another cross member by means which permit of raising or lowering this end, whereby the disc shaft and the cross shaft can be leveled up properly. Their continued perpendicularity is assured by two tie rods which run diagonally from the front end of the barrel to the point at which the parallel tie rods are connected to the cross member.

The disc shaft is carried in the barrel on two ball bearings, the one near the disc being of a combined radial and thrust type, so as to be able to take the end thrust due to the pressure of engagement. Only little end thrust has to be taken up on the

forward bearing, viz., that due to the disengaging spring, one end of which rests against the outer race of this bearing, while the other end rests against a shoulder in the barrel. The bearings are rigidly secured to the shaft and their outer races slide in the housing when the disc and wheel are engaged and disengaged.

The disc shaft is coupled to the motor by a floating shaft having a universal joint at either end, one of which joints also has

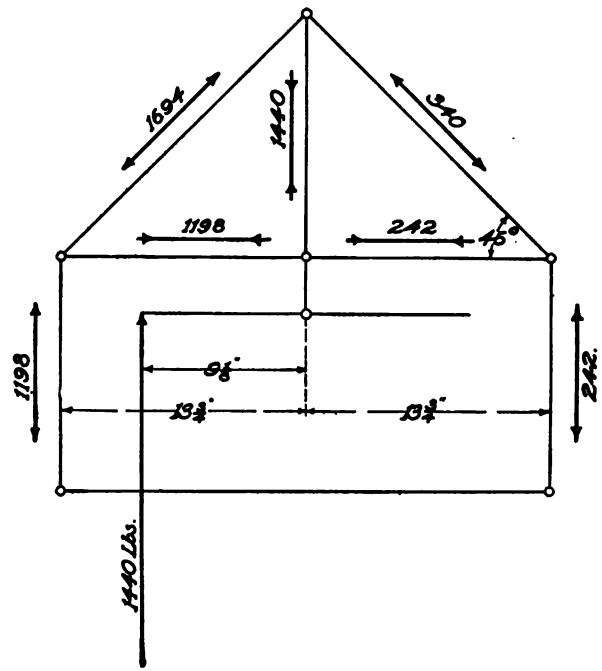

FIG. 100.—DIAGRAM OF REACTIONS DUE TO PRESSURE OF APPLICATION.

a sliding motion. Engagement of the friction members is effected by two cams, one on either side of the barrel (Fig. 99). These cams form an integral piece with a lever, which is connected to a pedal operated in the usual manner by the driver. The cams, which are shaped according to a certain curve, press against rollers mounted on studs which project through slots in the barrel. The studs are screwed into a sleeve adapted to slide

inside the barrel and resting against the ball bearing arrangement which carries the rear end of the disc shaft. The slots through which the roller studs project are sufficiently wide to permit a slight degree of rotation of the sleeve, by which the contact of both cams with their rollers is insured.

A special feature of Mr. Jakob's design is that the reactions caused by the engagement of the friction mechanism are taken up entirely within a truss and tie rod system, with the exception of the pull on the cam lever exerted by the driver. This force, however, is not very large, and is well taken care of by the diagonals and two cross-members. That the remaining forces are completely taken up within the system is shown by the diagram Fig. 100. In drawing this diagram it was assumed that in engaging the disc and wheel at the point of maximum speed the driver applied to the pedal the pressure necessary to hold the two in engagement in the position of low speed under full engine power, viz., 1,440 pounds. Compression and tension are indicated by arrow heads turned toward each other for the former, and away from each other for the latter.

One of the possible troubles with a friction disc drive that should be provided against is that of wearing flats on the wheel by allowing the disc to slip for extended periods on using the gear as a brake. Manufacturers formerly sometimes recommended the use of the friction transmission for braking purposes, but this practice is to be condemned. Of course, only an inexperienced driver will cause the disc to slip for a long time on a stationary wheel.

CHAPTER VI.

UNIVERSAL AND SLIP JOINTS.

Universal joints serve the purpose of connecting shafts or control rods whose axes lie in the same plane but make an angle with each other. They are particularly required when the angle between the shafts varies in service. In an automobile the most important application of universal joints is in the transmission line between the spring-supported parts and those carried by the driving axle. Every shaft driven car must have at least one universal joint in the propeller shaft, and many have two.

The simplest form of universal joint consists of a squared block secured to one of the shafts to be connected, fitting in a square hole in a sleeve secured to the other shaft. The four faces of the block are curved in the direction of the axis of the shaft to which the block is fastened. This type of universal joint is illustrated in Fig. 101. It will readily be seen that owing to the curvature of the faces of the block, one of the shafts can be moved angularly with relation to the other in two planes at right angles to each other. This joint also constitutes a slip joint.

The prototype of the modern universal joint is the Hooke or Cardan joint, illustrated in Fig. 102. It consists of two forks, each of which is secured to one of the shafts to be connected, and of a cross-shaped part which is connected to each of the forks by means of a pin. In the form here illustrated and as used in stationary work, the axes of the two pins do not intersect, but are at some distance from each other to allow of the pins passing each other. However, there is an advantage in having the pins both in the same plane. This end can be attained by using pins of different diameters and passing one through the other, or by using one long and two short pins. Cardan joints thus modified are used in automobile work. In the design illustrated one pin locks the other in position and is itself locked by a cap screw

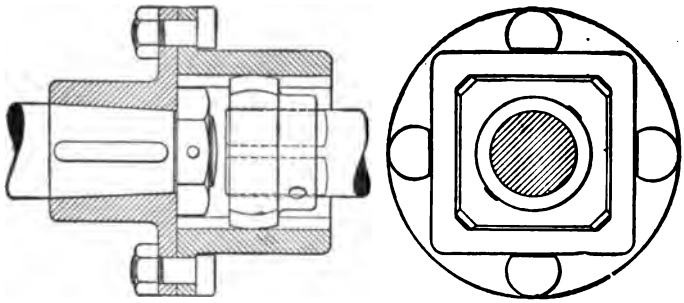

FIG. 101.—SQUARE BLOCK TYPE OF UNIVERSAL AND SLIP JOINT.

through one arm of the cross and passing beneath the surface of the pin.

A design in which the cross is replaced by a ring is illustrated in Fig. 103. This also comprises two forks, but instead of the outer ends of the forks having radial bearing holes drilled through them, they are provided with bearing pins extending radially outward. The ring has bearings for these pins formed in it. It is made in halves, being split through the centre lines of the four bearings so as to permit of assembling the joint. The halves are secured together by means of cap screws and nuts.

A slight variation from the design just described consists in a ring formed with four radial bearing pins and forks with separate bearing caps, as illustrated in Fig. 104. This type offers particular advantages when the universal joint is to be secured to a brake drum, clutch drum or similar member, as only one

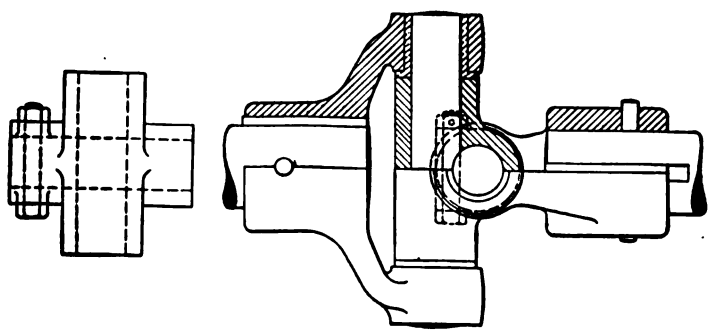

FIG. 102.—CROSS TYPE OF UNIVERSAL JOINT.

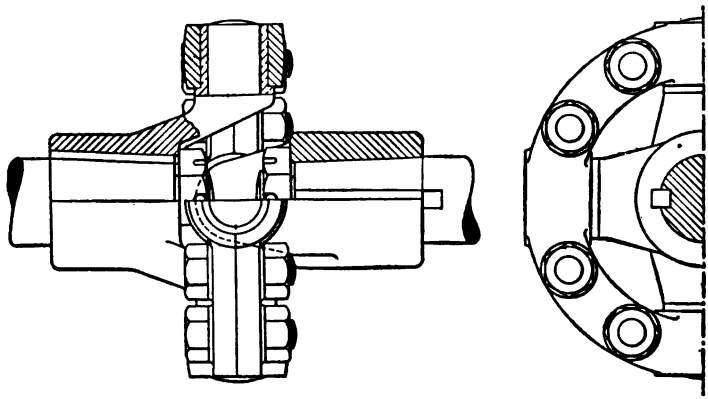

FIG. 103.—SPLIT RING TYPE OF UNIVERSAL JOINT.

fork is required in that case, the part of the other fork being taken by a pair of lugs cast integral with the web of the brake drum, etc. This is shown in the illustration. Again, one member may be made in the form of a disc keyed to the driving shaft, which forms part of the universal joint housing.

Probably the most extensively used type of universal joint is the slotted shell and trunnion block type, illustrated in Fig. 105. This consists of a cup-shaped steel forging secured to one of the shafts, with two diametrically opposite longitudinal slots milled

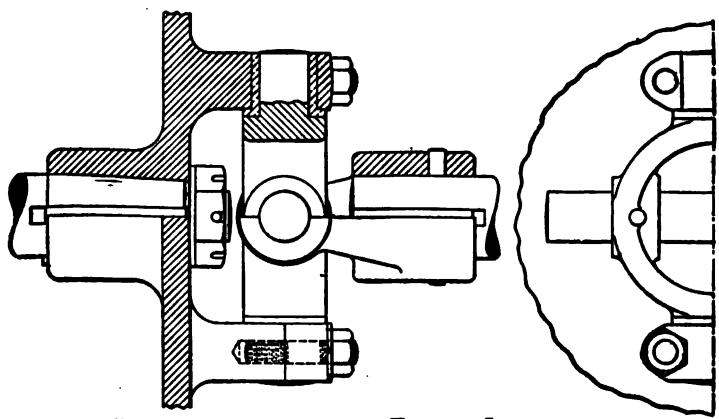

FIG. 104.—INTERNAL RING TYPE OF JOINT.

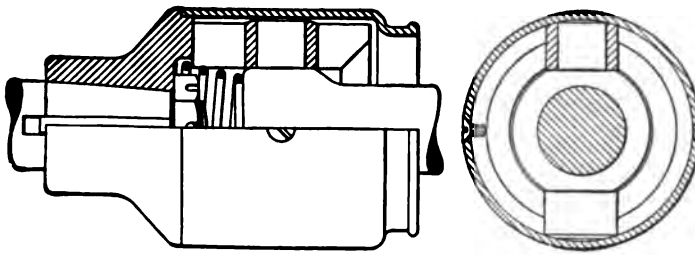

FIG. 105.—BLOCK AND TRUNNION TYPE UNIVERSAL JOINT.

in its shell. The other shaft is provided with a ball shaped end fitting the interior of the shell and provided with pins or studs extending into the slots. Hardened steel trunnion blocks are interposed between the pins and the walls of the slots to distribute the bearing pressure. This type of joint, it will be noted, serves also as a slip joint, and it can be easily enclosed.

Periodical Speed Fluctuations.—A feature of all of the universal joints described above is that they do not transmit motion uniformly when the shafts are at an angle with each other; that is to say, if the driving shaft runs at uniform speed, the speed of the driven shaft will vary periodically, being soon less and soon greater than the speed of the driving shaft. The common feature of all of these joints is that they have two rocking axes at right angles to each other.

To gain an idea of the magnitude of the variation in angular velocity, we will assume a universal joint connecting two shafts

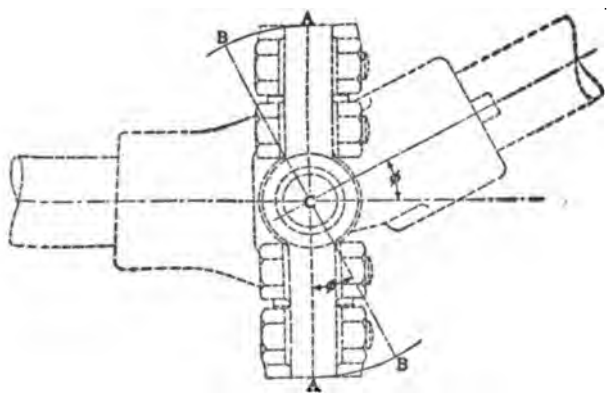

FIG. 106.

in a vertical plane, the driving shaft being placed horizontally, as in Fig. 106. The axes of the two pins intersect each other, their ends being designated by AA and BB, respectively. When the joint is in motion the line AA describes a circle in a vertical plane, and the line BB a circle in a plane making with the vertical an angle ϕ, equal to the angle between the two shafts. These two circles are great circles of the same sphere, the common diameter being a line through the point C perpendicular to the paper. Points A and B always remain at the same distance from each other, viz., one quadrant of a great circle. The deviation in the direction of travel is the greatest when either point A or point B coincides with the points of intersection of the great circles. When the points A coincide with these points of intersection, the angular speed of the driven shaft is smaller than the angular speed of the driving shaft, and when points B coincide with these points of intersection the angular speed of the driven shaft is greater than the angular speed of the driving shaft. There are four points in each revolution in which driving and driven shafts rotate at equal angular speeds, these being located substantially midway between the points of maximum and minimum speeds of the driven shaft.

Let the two large arcs in Fig. 107 represent the great circles in which the points A and B travel. Let point A travel from the point of intersection to point A' and point B travel at the same time to B', which is determined by the fact that $A'B'$ must be a quadrant. Now, lay off from the point B' on the line of travel of point B a quadrant, or 90 degrees, which will give point C. Through A' and C draw an arc of a great circle. Angles $B'A'C$ and $B'CA'$ are both right angles (because their opposite sides are quadrants), hence angle ACA' is a right angle. We, therefore, have a right-angled spherical triangle $AA'C$, the angle $A'AC$ of which is equal to the angle between the two connected shafts, the side AA' of which represents the angular motion of the driving shaft, and the side AC the angular motion of the driven shaft during a short period after the point A has passed through the point of intersection; in other words, when the pin of the driving shaft is at right angles to the plane through the two connected shafts.

According to a theorem of spherical trigonometry

$$\cos A'AC = \tan AC \cot AA' \quad \ldots\ldots (36)$$

Since the tangent is the reciprocal of the cotangent we may write this

$$\frac{\tan AC}{\tan AA'} = \cos A'AC,$$

and since for very small angles the tangents are proportional to their angles, we have

$$\frac{A\,C}{A\,A'} = \cos A'\,A\,C \ldots\ldots\ldots\ldots\ldots\ldots\ldots\ldots\ldots\ldots\ldots\ldots\ldots\ldots\ldots\ldots (37)$$

Therefore, when the pin of the driving shaft is perpendicular to the plane through the connected shafts the angular velocity of the driven shaft is smaller than the angular velocity of the driving shaft in the proportion of the cosine of the angle between the two shafts to unity. It may be shown in a similar way that when the pin on the driving shaft is in the plane of the two connected

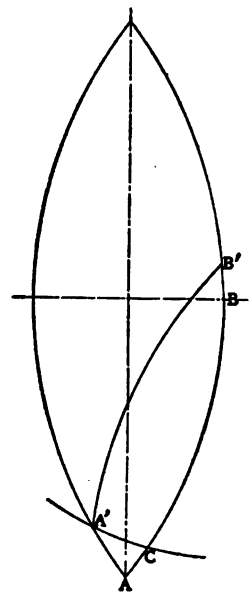

FIG. 107.

shafts the driven shaft runs faster than the driving shaft in the inverse proportion.

It is also of interest to find an expression for the momentary ratio of angular velocities at any point in the revolution of the driving shaft. To simplify the expressions, we will denote the angle $A'\,A\,C$ by ϕ, the side $A\,A'$ by a and the side $A\,C$ by b. Then we have as before (Equation 36)

$$\tan b = \cos\phi \tan a \ldots\ldots\ldots\ldots\ldots\ldots\ldots\ldots\ldots\ldots\ldots\ldots\ldots\ldots\ldots\ldots (38)$$

Differentiating, we have

$$\sec^2 b\, db = \cos\phi \sec^2 a\, da$$

and

$$\frac{db}{da} = \cos\phi \frac{\sec^2 a}{\sec^2 b}, \quad \ldots\ldots\ldots\ldots\ldots\ldots\ldots\ldots\ldots\ldots\ldots\ldots (39)$$

which gives the ratio of angular velocities at any moment in terms of ϕ, a and b. It is preferable, however, to express the value in terms of ϕ and a only, as b is not directly known, and the latter can be easily eliminated. Squaring equation (38) we have

$$\tan^2 b = \cos^2\phi \tan^2 a.$$

Adding 1 to each side of the equation—

$$1 + \tan^2 b = 1 + \cos^2\phi \tan^2 a \quad \ldots\ldots\ldots\ldots\ldots\ldots\ldots\ldots (40)$$

But since

$$1 + \tan^2 b = \sec^2 b,$$

we may substitute the right hand term of equation (40) for $\sec^2 b$ in equation (39)

$$\frac{db}{da} = \cos\phi \frac{\sec^2 a}{1 + \cos^2\phi \tan^2 a}, \quad \ldots\ldots\ldots\ldots\ldots\ldots\ldots\ldots\ldots\ldots (41)$$

which gives the ratio of angular velocities after any angular move a of the driving shaft from the zero position in which the pin of the driving fork is perpendicular to the plane through the two shafts. When $a = o$ equation (41) reduces to

$$\frac{db}{da} = \cos\phi.$$

which is the same as already found for the position of minimum speed of the driven shaft.

The curve, Fig. 108, shows the variation in speed of the driven shaft during a motion of one-half a revolution or 180 degrees the driving shaft making 1,000 r. p. m. and the angle between the shafts (ϕ) being 30 degrees. We start with the position where the pin of the driving fork is perpendicular to the plane of the two shafts. In this position the driven shaft rotates at the rate of 866 r. p. m., its lowest speed. The speed of the driven shaft increases until after a little more than 45 degrees motion of the driving shaft it equals the speed of the latter. It keeps on increasing, and after 90 degrees motion, when the pin of the driving fork is in the plane of the connected shafts, it attains its maximum speed of 1,155 r. p. m.. Then it decreases again, according to the same curve, until after 180 degrees, or one-half revolution, it again attains its minimum speed of 866 r. p. m. During one revolution the speed of the driven shaft, therefore, passes

through two maxima and two minima. Its average speed, of course, is the same as that of the driving shaft, and the speed fluctuation amounts to

$$\frac{(1155-866) \times 100}{1{,}000} = 28.9 \textit{ per cent.}$$

The following table gives the speed fluctuations in the driven shaft corresponding to different angles between shafts, the speed of the driving shaft being assumed to be constant:

Angle ϕ (Degrees.)	Fluctuation (Per Cent.)	Angle ϕ (Degrees.)	Fluctuation (Per Cent.)
2	0.15	16	7.9
4	0.5	18	10.
6	1.1	20	12.4
8	2.	22	15.
10	3.	24	18.
12	4.4	26	21.3
14	6.	28	25.

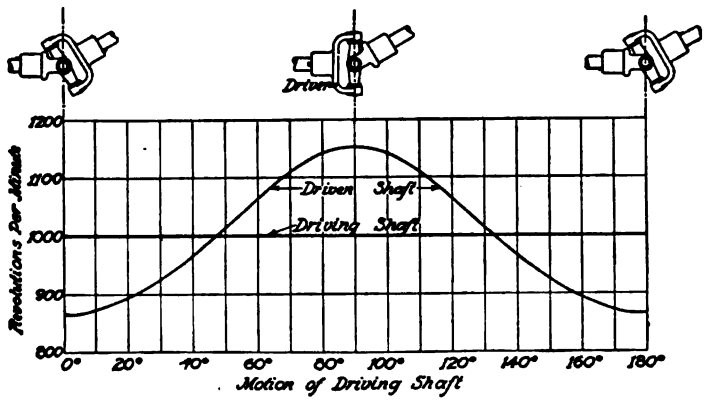

FIG. 108.—VARIATION OF DRIVEN SHAFT SPEED.
(Angle Between Shafts, 30 Degrees.)

This fluctuation in the speed of transmission is a matter of great moment. In a gasoline automobile we have at one end of the transmission line the motor, whose speed is maintained substantially constant by a heavy flywheel, and at the other end the car, which, when running at high speed, also has its speed maintained by inertia. But if the transmission is effected through a single universal joint working at an appreciable angle, the speed of either the car or the engine, or of both, must of necessity change greatly in a quarter revolution of the driving shaft. The flywheel inertia strongly resists such a change in the speed of the engine, and the car inertia a change in the speed of the car, and

the result is that every part of the transmission line is subjected to enormous stresses. Not the least to suffer under these stresses are the tires, which tend to slip on the ground as the car tends to suddenly accelerate. To minimize these stresses the drive must be so arranged that the two shafts are always nearly in line with each other. They can be entirely eliminated by using two universal joints in series. We found that the speed of transmission is reduced in a certain ratio when the pin of the driving fork is perpendicular to the plane through the shafts and increased in the inverse proportion when the pin of the driving shaft is in the plane of the shafts. These two positions are 90 degrees apart. Hence, by arranging two universal joints in series (Fig. 109) in such relation that the driving fork or corresponding member of

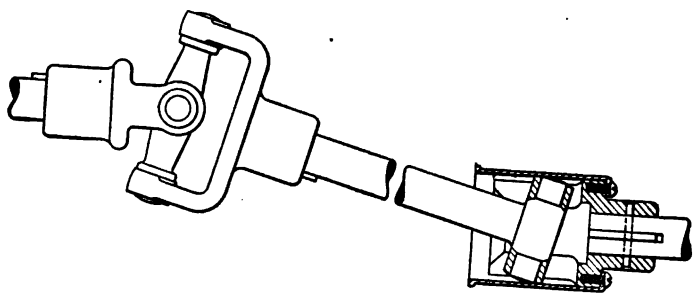

FIG. 109.—ANGULAR RELATION OF DOUBLE UNIVERSAL JOINTS TO INSURE UNIFORM TRANSMISSION OF MOTION.

the second is set at an angle of 90 degrees with respect to the driving fork of the first, and so that the driving and driven shafts are parallel, both making the same angle with the intermediate shaft, then motion will be uniformly transmitted from the driving to the driven shaft. In other words, the pins at the ends of the intermediate shaft must be in the same plane, or parallel. The intermediate shaft, of course, will still revolve non-uniformly if there is an angle between it and either of the shafts connected by it, but since it has very little inertia this is of no importance.

The Square Block Type—The square block type of joint can hardly be recommended for such important work as in the transmission from the gear box to the rear axle. It has given very good satisfaction in individual cases, but failed absolutely in other cars of the same make. It must be remembered that in this type of joint there is a line contact only, and the bearing pressures are

necessarily very high. Therefore, if lubrication is neglected or if the bearing surfaces are not uniformly hardened, cutting sets in, and once there is a little play the joint is soon hammered out. This type of joint was employed in the 1909 model of a popular American make of medium priced car, but was discarded the next season. For a four cylinder 3⅞x4½ inch engine the block measured 2x2 inches and was ⅝ inch wide.

The contact surfaces of the block are made cylindrical. If the block were made a good fit in the sleeve it would, of course, be possible to rock it in one or the other of two planes, but not in both simultaneously. However, the block in service has to rock relatively to the sleeve in every direction, and to make this possible it must have a certain amount of play in the sleeve when their axes are parallel. This play, of course, must be made as small as possible, because it is a source of noise and wear, and it will naturally increase in use. The problem of the amount of play required in square, pentagonal and hexagonal block joints to allow operation at certain limiting angles has been investigated by O. Winkler (*Der Motorwagen,* Nos. 3 and 4, 1912), who finds that the ratio $\frac{D}{D_1}$ of the diameter of the block and that of the recess should be as follows for various limiting angular motions.

Limiting Angle of Operation. (Degrees.)	Ratios of Block to Recess Diameters		
	Square.	Pentagon.	Hexagon.
2	1.00031	1.00022	1.00015
4	1.00122	1.00088	1.00062
6	1.00276	1.00198	1.00139
8	1.00490	1.00353	1.00247
10	1.00766	1.00551	1.00386
12	1.01102	1.00793	1.00555
14	1.01501	1.01080	1.00756
16	1.01960	1.01411	1.00988
18	1.02481	1.01785	1.01250
20	1.03062	1.02204	1.01543

Calculation of Forked Types.—In designing the forks for universal joints comprising such members, conflicting requirements are met with. That is, if the fork arms are spread far apart the pressures on the bearings will be reduced and the frictional loss consequently will be less, but, on the other hand, the joint has to be enclosed and forks of wide spread necessitate a bulky and heavy casing. Usually the joint is made as compact as possible, and the bearings are made large enough to withstand the pressure. The distance between the middle points of opposite bearings is usually about three times the shaft diameter. This distance, of course, is a matter of choice, but a good approximation to

average modern practice in the universal joints of propeller shafts is obtained by making it

$$d = 0.8 \sqrt[3]{T} \quad \ldots\ldots\ldots\ldots\ldots\ldots\ldots\ldots\ldots\ldots\ldots\ldots\ldots\ldots\ldots\ldots\ldots\ldots\ldots\ldots\ldots\ldots (42)$$

where T is the normal speed torque of the motor. Of course, the greatest torque is transmitted by the propeller shaft universals when the low gear is in operation, and in the calculation of the parts for mechanical strength it is well to start with the maximum torque available on the low gear. On the other hand, in determining the bearing surfaces the pressures on direct drive should be figured with, as in most cars the direct drive is used a very large proportion of the time; and, besides, the rubbing speed at the bearing surfaces of the universal is far greater when the direct drive is in operation than when the power is transmitted through the low gear. The bearings of universal joints of the types shown in Figs. 102-105 are so proportioned that the unit bearing pressure at full engine load on direct drive is 500 pounds per square inch. The length and diameter of the bearings usually bear to each other the ratio of 4 to 3.

We will now illustrate the calculation of a universal joint by a practical example. The joint, we will suppose, is to transmit the power of a four cylinder 4x5 inch motor (normal speed torque = 108 lbs.-ft.), and the low gear ratio is 3.2.

The distance between the middle points of the bearings would be

$$0.8 \sqrt[3]{108} = 3.81 — \textit{say } 3\tfrac{3}{4} \textit{ inches.}$$

This gives a mean bearing radius of $1\frac{7}{8}$ inches and makes the bearing pressure for the direct drive

$$\frac{108 \times 12}{1\frac{7}{8}} = 691 \textit{ pounds.}$$

This pressure being taken up on two bearings, the pressure on each is 345.5 pounds, and at 500 pounds per square inch the projected area of each must be

$$\frac{345.5}{500} = 0.691 \textit{ square inch.}$$

If the length of the bearing is to be 4/3 the diameter, then the projected area is 4/3 d^2 and

$$\frac{4}{3} d^2 = 0.691 \textit{ square inch.}$$

$$d^2 = \frac{3}{4} \times 0.691 = 0.518 \textit{ square inch}$$

and

$$d = \sqrt{0.518} = 0.72 — \textit{say, } \tfrac{3}{4} \textit{ inch.}$$

The length is

$$\frac{4}{3} \times 0.72 = 0.96 - \textit{say, 1 inch.}$$

It is to be remembered that if the bearings are spaced farther apart their dimensions can be made smaller.

The low speed or maximum torque of our motor is 133 pounds-feet, and the torque to be figured on in calculating parts for strength is

$$3.2 \times 133 = 425.6 \textit{ pounds-feet.}$$

If the universal joint is to be secured to the shaft with a key its hub is generally made with a diameter of 1.6 the shaft diameter, and its length is made about the same as its outside diameter.

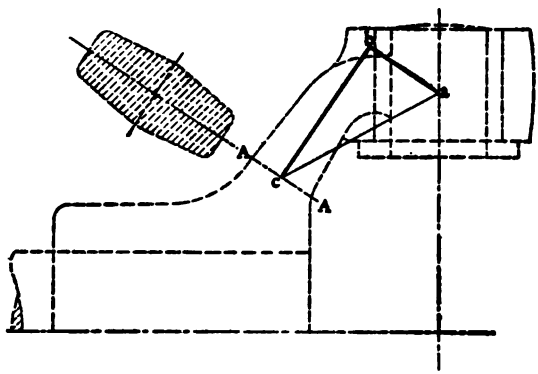

FIG. 110.—DETERMINATION OF STRESS IN FORK ARM.

Assuming the propeller shaft to be of 1¼ inches diameter, the hub diameter and length should be

$$1.6 \times 1.25 = 2 \textit{ inches.}$$

We now have the sizes of the hub and the bearings and their relative positions. We lay these down on the drawing board and sketch in the arms, as shown in Fig. 110. When the car is running under full power on the low gear there is a normal force of

$$\frac{425 \times 12}{2 \times 1\frac{7}{8}} = 1360 \textit{ pounds}$$

acting at point *a*. Now, we take any section of the arm like *AA* and draw a perpendicular *cb* to the middle point of this section. Next we construct a right-angled triangle with *cb* as the base and *a* as the apex. Evidently the force of 1,360 lbs., acting normally to the paper at *a* produces in the section *AA* of the arm a torsional

stress proportional to the arm *ab* (which by measurement is found to be ⅝ inch), and a bending stress proportional to arm *cb* (which is found to be 1¼ inches). Hence the torsional moment is

$$M_t = \tfrac{5}{8} \times 1360 = 850 \textit{ pounds-inches.}$$

and the bending moment,

$$M_b = 1\tfrac{1}{4} \times 1360 = 1700 \textit{ pounds-inches.}$$

As drawn in Fig. 110, the section of the arm at *AA* is equivalent to a rectangle measuring ½ inch x 1¼ inches. The proper method of procedure is to assume a section like this, and then calculate the stress in the arm under the combined bending and torsional moments, and if it figures out either too high or too low to change the section accordingly.

We first find the stress due to the bending moment, and that due to the torsional moment separately, and then combine the two. The bending stress is found by means of the equation

$$S_b = \frac{M\,c}{I},$$

where M is the bending moment, c the distance of the outermost fibre from the neutral axis, and I the moment of inertia of the section around the neutral axis for bending stresses. M in our case is 1700 pounds-inches; c, ⅝ inch, and I

$$\frac{\tfrac{1}{2} \times 1\tfrac{1}{4}^3}{12} = 0.0814$$

Hence the bending stress is

$$\frac{1{,}700 \times 0.625}{0.0814} = 13{,}050 \textit{ pounds per square inch.}$$

The formula for the shearing stress due to the torsion is exactly the same as that for the bending stress, but I in this case represents the polar moment of inertia of the section, and M and c, of course, have different values.

$$M = 850 \textit{ pounds-inches.}$$

$$c = \sqrt{(\tfrac{5}{8})^2 + (\tfrac{1}{4})^2} = 0.673$$

$$I = \frac{\tfrac{1}{2} \times 1\tfrac{1}{4}^3}{12} + \frac{1\tfrac{1}{4} \times \tfrac{1}{2}^3}{12} = 0.0944.$$

Hence, the stress due to torsion is

$$\frac{850 \times 0.673}{0.0944} = 6{,}060 \textit{ pounds per square inch.}$$

Calling the bending stress S_b and the torsional stress S_t, the total stress in the material is

$$\tfrac{1}{2} S_b + \sqrt{S_t^2 + \tfrac{1}{4} S_b^2}$$

(Merriman, Mechanics of Materials, Fourth Edition, p. 152).

Hence in this case the combined stress is

$$\frac{13,050}{2} + \sqrt{6,060^2 + \frac{13,050^2}{4}} = 15,430 \text{ pounds per square inch.}$$

which is reasonable, though somewhat higher than the stress in the shaft. If it is thought desirable, a similar calculation can be carried through for another section of the arm, but usually a single calculation would be considered sufficient, the arm being tapered slightly from end to end. The forks are generally drop forged and occasionally cast, and the section must be given the necessary draft of about 8 degrees. The thickness of the walls of the bearing hubs and the cross can be made

$$\frac{d}{4} + \frac{1}{16} \text{ inch, where } d \text{ is the diameter of the pin.}$$

This makes the bearing diameter larger than the cross diameter by twice the thickness of the bushing. For the sake of appearance it is well to have the two diameters approach each other gradually at the junction, and this can be accomplished by either making the bearing hub barrel shaped, as shown, or else providing the cross with circumferential flanges at the ends of its arms. These flanges strengthen it considerably and permit of reducing the thickness of the metal between them.

Calculation of Block and Trunnion Type—In this type of universal joint the bore of the shell is made sufficiently large to allow the shaft the necessary freedom of angular motion, and, therefore, can be best determined on the drawing board. The pins are so proportioned that the unit pressure on them when the engine is driving direct at normal speed under full power, figures out to about 1,000 pounds per square inch. The unit pressure between the blocks and the walls of the slot can be made between 600 and 700 pounds per square inch. The trunnions are generally made of about the same length as their diameter. As a precaution, the stress at the bottom section of the pin corresponding to maximum engine torque and low gear operation, should be calculated. All of the bearing parts of a joint of this type should be hardened or case hardened and ground. It is the hardened steel bearing surfaces that make possible the greater unit bearing pressures as compared with other types of universal joints. The length of the slots will depend somewhat on the spring action and on the length and inclination of the shafts to be connected. It is generally about equal to the outside diameter of the shell.

This type of joint is very largely used at the rear end of a propeller shaft provided with two universal joints, serving both

as a universal and slip joint. Occasionally two of these joints are used in a single shaft, in which case it is necessary to hold the ball of one joint between stops or to centre the shaft between springs, as illustrated in Fig. 105. Neglect of this precaution will not only result in noisy operation, but will make it difficult to keep the lubricant in the joint housing. The sliding blocks should preferably be cut with slanting oil grooves across their bearing surfaces to insure effective lubrication.

Lubrication and Dust Protection—On the earlier shaft driven cars the universal joints were not enclosed and it was found very difficult to lubricate them effectively. Centrifugal force would cause the joint to throw the oil off and grit would work into the bearings and cause their rapid destruction. This

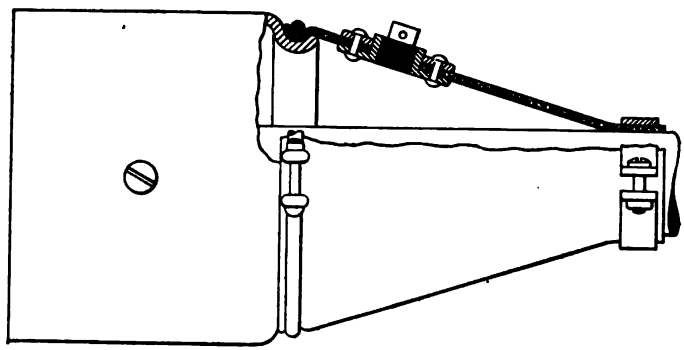

FIG. 111.—LEATHER BOOT FOR UNIVERSAL JOINT.

was remedied to an extent by making the bearing bushings thimble shaped, that is, "blind" at their outer end, but the most effective remedy undoubtedly consists in enclosing the whole joint oil and dust proof. There are various methods of accomplishing this.

The universal joint which is easiest to enclose is the block and trunnion type. As shown in Fig. 111, it is provided with a tight fitting tubular steel housing over the part which we have called the shell, fitted against a shoulder turned thereon and secured in position by means of a couple of machine screws. This housing can have a groove formed on it at its open end to which a leather boot can be fastened whose other end is tied around the shaft. It is a good plan to rivet a fitting,

closed by a quarter inch pipe plug, to the leather boot, for convenience in replenishing the lubricant. The leather boot is fastened in place by means of clamps, similar to hose clamps. If one end is clamped tight to the shaft, sufficient slack must be allowed in the boot to permit the shaft to swing freely in all directions through its maximum operating angle. Some makers clamp the small end of the boots to a sliding sleeve on the shaft, enabling the boot to readily accommodate itself to varying angularities between the two shafts.

Another form of universal joint housing is illustrated in Fig. 112. One member of the joint is made in the form of a plate to

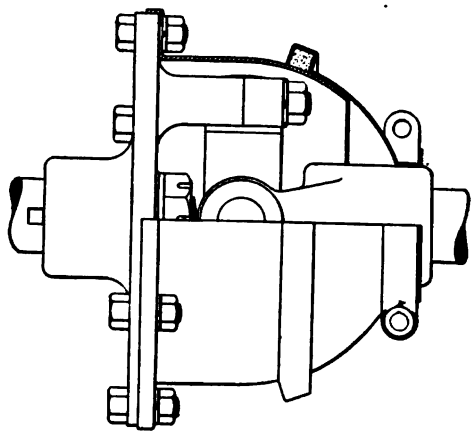

FIG. 112.—SHEET METAL HOUSING.

which is bolted a spun sheet metal housing which is partly cylindrical and partly spherical. Against the spherical portion of this housing bears another sheet metal part in the form of a spherical zone, the latter being secured to the hub of the universal joint fork. This type of housing is applicable only to joints whose two axes intersect, and the centre of the spherical portions must be at the point of intersection of these two axes. The cover plate is formed with a groove near its edge which is filled with packing material.

Fig. 113 shows still another form of housing. It is substantially ball shaped and consists of three parts. Two of these are bolted together and form, between them, bearings for two of the trunnions of a cross, one of these two parts being keyed to one of the connected shafts. The arms of the cross

are of unequal length, the two longer arms having bearings in the housing, and the two shorter ones in the ends of the arms of a fork secured to the other shaft. The latter shaft extends through a circular opening in the ball shaped housing, sufficiently larger than the shaft to permit of its swinging to the maximum angle of operation in any direction. This opening is closed by a zone shaped cover which is pressed against a machined surface on the inside of the housing by a coiled spring.

Where a single universal joint is used in the propeller shaft and the latter is surrounded by a torque tube, the forward end of this torque tube is often supported by a ball and socket

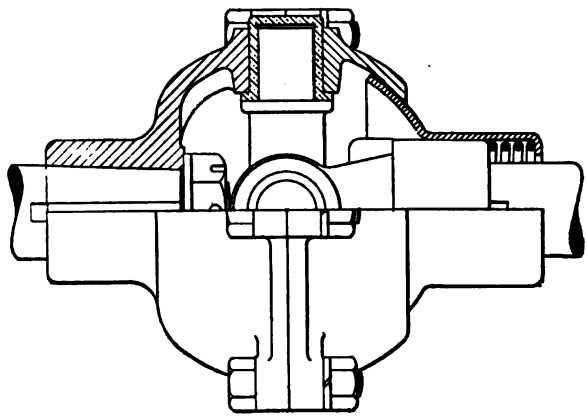

FIG. 113.—ENCLOSED UNIVERSAL JOINT.

joint, secured to a cross frame member, the ball being made hollow and serving as a housing for the universal.

Anti-Friction Bearing Universals.—Anti-friction bearings have been used in universal joints to a small extent. Fig. 114 shows the Lancia joint which is fitted with radial ball bearings. It is of the fork and internal ring type. The use of ball bearings has led to a special method of assembling. It will be seen that the fork ends are slotted, the slots being just large enough to permit of the trunnions being passed through them. The ball bearings are then slipped over the trunnions and into their seats in the fork ends and the outer races are secured in place by means of cap plates. The H. H. Franklin Mfg. Co. uses rollers in the blocks of a block and trunnion type of universal joint. These entirely fill the space between block and

trunnion, and are held in place by end washers, no cages being used.

It is hardly to be expected that much saving in power will result from the use of anti-friction bearings at this point, because of the small angularity of the shafts and the consequent limited motion at the joint bearings in modern cars. Probably the chief advantage of such bearings in this place is that they are not so easily damaged as plain bearings if the lubrication should be neglected.

Slip Joints.—Unless a combined universal and slip joint like the square block type or the block and trunnion type is used

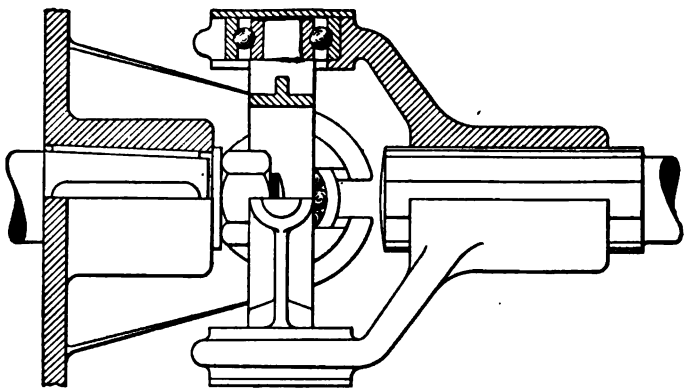

FIG. 114.—LANCIA BALL BEARING UNIVERSAL JOINT.

in the propeller shaft, a special slip joint must be provided to allow for variations in the distance between the change gear box and the rear axle housing, due to play of the springs. This may be either a squared or a fluted shaft with a corresponding hub or sleeve. It may be stated at once that the block and trunnion type of joint is far preferable, since the sliding motion occurs farther away from the axis of rotation, hence the pressure on the sliding surface, and consequently the resistance to sliding, is much smaller. Fig. 114 illustrates a four fluted sliding joint. Six fluted shafts are also used. The Society of Automobile Engineers has standardized fluted shafts and given rules for their load capacity (see Appendix).

Leather Disc Universal Joints.—Leather universal joints have been used chiefly between the clutch and change

speed gear. These universals are silent in operation and they are not subject to bearing friction, consequently they are highly efficient as regards the transmission of power. A leather universal joint consists of two similar spiders, usually three-armed, fastened to the ends of the shafts to be connected and of a number of leather discs or rings bolted between the spiders. The arms of the two spiders are staggered, so that any arm of one of the spiders is located midway between two arms of the other spider. Three, four or five discs may be used and individual discs are often spaced by steel washers. It will at once be seen that the ability of such a universal to transmit motion between shafts at an angle is limited as to the angle.

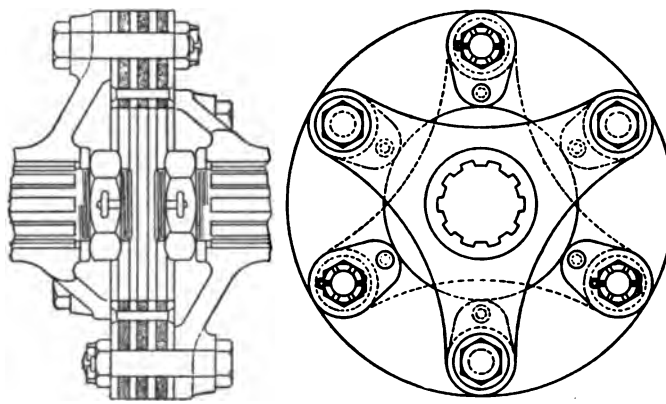

FIG. 115.—TYPICAL DESIGN OF LEATHER DISC UNIVERSAL JOINT.

A typical leather universal is illustrated in Fig. 115. This shows four leather discs between the two spiders, each pair of discs separated by steel washers at the points where the bolts pass through. These steel washers distribute the driving strain over a larger area and also increase the flexibility or freedom of action of the joint.

It is impossible to calculate the actual stress in the leather when the joint works at an angle. It increases, of course, rapidly with the angle. For insertion between the clutch and change gear, where very little universal action is called for, a stress in the leather of 200 lbs. per square inch may be allowed. Thus, let T be the maximum torque of the engine; n, the number of discs; d_o, the outside diameter; d_i, the inside diameter,

and t, the thickness of the leather. Then with three-armed spiders the load is divided between $3\ n$ sections of the leather with a combined cross-sectional area of $3\ nt$ square inch. The tangential force is

$$F = \frac{2\ T \times 12}{d_o + d_i},$$

which may be solved for d_o after first assuming a certain relation between d_o and d_i.

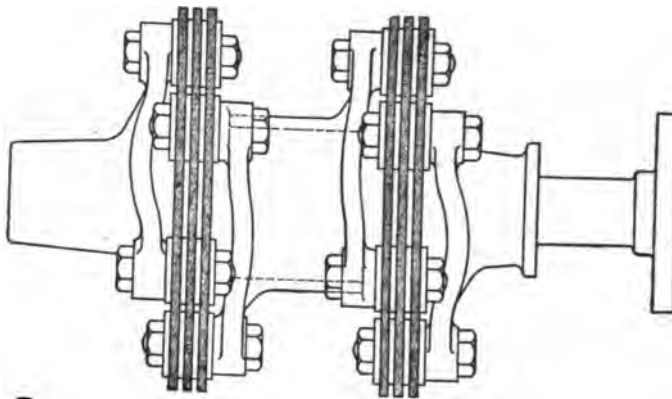

FIG. 116.—LEATHER DOUBLE UNIVERSAL JOINT (OVERLAND).

Experience with leather universal joints has not been uniformly successful and the greatest care is required in their design. The bosses of the spider arms where they bear against the leather, and the washers must be carefully rounded, and only the best grade of chrome leather must be used. Some manufacturers are said to treat the leather with linseed oil to make it more flexible and proof against the effects of moisture. If there is too much end strain on the universals the leather discs will "cup" and pull apart. One scheme to prevent this consists in inserting two or three thin sheet steel rings between adjacent leather rings and riveting the whole together.

Rubberized fabric discs are sometimes used in place of the leather. The discs are built up of layers of fabric with the warp of succeeding layers at slightly different angles. In fact the whole circle is divided into a number of parts equal to the number of layers in the discs and the angle thus arrived at is the angle between the warp of adjacent discs.

CHAPTER VII.

THE DIFFERENTIAL GEAR.

The purpose of the differential gear, as explained in Chapter 1, is to permit of equally dividing the driving effort of a single source of motive power between two driving wheels and to allow cars driven through wheels on opposite sides to be freely steered. There are two general types of differential gears, viz., the bevel type and the spur type.

A bevel type differential gear consists of two bevel gears arranged coaxially and facing each other, and a varying number of bevel pinions between them meshing with both of the gears. Generally either three or four pinions are used, which are placed at equal angular distances. The pinions are capable of rotating on radial studs which are clamped at their outer ends between the two halves of a housing or skeleton frame. This frame is provided with hubs carried in ball or roller bearings in the rear axle or jackshaft housing and with a flange to which the driven bevel gear, sprocket, etc., can be secured.

Action of the Differential—Power is thus applied to the frame or housing of the differential. The housing transmits it to the bevel pinions, the latter to the bevel gears and these to the rear axle shafts or jackshafts. Under any given conditions of operation a certain torque is impressed upon the differential housing. This torque is divided equally between the three or four bevel pinions. Each bevel pinion constitutes a balance lever between the two bevel gears and evenly divides its torque between them. Thus the total torque impressed upon the differential housing is at all times equally divided between the two bevel gears, also called the master gears.

The relative motion of the two side gears depends upon the position of the steering gear and upon the traction conditions. Suppose first that both driving wheels run on dry road surface so there is plenty of road adherence. Then the rate of revolu-

tion of each wheel and that of the corresponding master gear of the differential will depend upon the length of the path followed by that wheel. If the steering road wheels are in the straight-ahead position and both driving wheels have exactly the same diameter, then both will rotate at the same speed, as will the differential master gears. On the other hand, if the steering road wheels are deflected from the straight-ahead position the vehicle is constrained to travel in a curve, and the wheels on the outside of the curve will be forced to turn faster than those on the inside. Under these conditions the pinions of the differential will turn on their studs, allowing one master gear to run faster than the other. The speed of the frame or housing of the differential is always equal to the algebraic mean of the speeds of the two master gears.

In case one of the wheels stands on slippery ground and has insufficient road adherence, it will slip. The differential gear under these conditions also divides the propelling effort equally between the two driving wheels, and the wheel which stands on dry surface can exert no more propelling effort than the one on slippery surface. The car will thus be stalled, and the wheel on slippery ground will be spun around at twice the rate at which it would otherwise turn with the engine running at the same speed, whereas the other wheel will remain stationary. This quality may be regarded as a defect of the differential gear, especially in the case of very heavy vehicles, and such vehicles are often provided with a differential lock, consisting of some means for so connecting the two master gears of the differential together that they must rotate in unison.

Calculation of Bevel Type Differential.—Differential gears are made very compact, being almost a solid box of gears. In calculating their dimensions it is advisable to base the calculation upon the maximum torque on the rear axle under low gear, for the reason that the pinions and gears operate only occasionally and then only for short periods at a time. They are, however, constantly subjected to the stress due to the torque being transmitted through their teeth.

The torque-transmitting capacity of a bevel type differential gear varies as the square of the largest pitch diameter of the master gears, because the lever arm through which the tooth pressure acts is proportional to this pitch diameter and the face width of the tooth, and hence the permissible tooth pressure, also varies with the largest pitch diameter. It also varies as the circular pitch of the teeth and as the number of bevel pinions em-

ployed. Of course, the strength of the material also has an influence on the capacity of the differential, but inasmuch as low carbon steels are used in almost every instance, the tensile strengths of which do not vary much, we may neglect it. A considerable amount of practical data from modern cars shows that the largest pitch diameter of the master gears may be determined by means of the equation

$$p d_m = \sqrt{\frac{T}{70\, p\, n}} \qquad \ldots\ldots\ldots\ldots\ldots\ldots\ldots\ldots\ldots\ldots\ldots\ldots\ldots\ldots\ldots\ldots (43)$$

where T is the maximum low gear torque on the rear axle, p the circular pitch of the teeth and n the number of pinions.

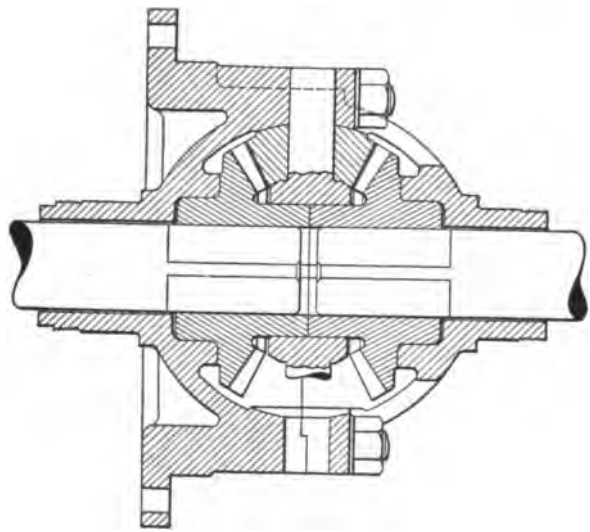

FIG. 117.—LONGITUDINAL SECTION THROUGH BEVEL TYPE DIFFERENTIAL GEAR.

The numbers of teeth generally range between 28 and 36 for the master gears and 16 and 20 for the pinions, the gears having about 1.8 times the number of teeth as the pinions. The maximum pitch diameter of the master gear having been determined, the pitch is chosen to give a number of teeth within the range mentioned. Gears of 8 pitch are generally used for small and moderate powers and 6 pitch for high powers. The face of the gears is made from ⅓ to ⅜ the distance from the intersection of

the two maximum pitch diameters to the centre of the differential. The unit pressure on the pinion pins is calculated on the basis of 4,500 pounds per square inch under maximum engine torque and low gear, and the pin diameter is generally made equal to three-fourths the bearing length.

After the dimensions of the differential have been roughly determined by means of the above rules, a layout can be made and the design checked up by calculating the stress in the teeth of the bevel pinion, which should be in the neighborhood of 45,000 pounds per square inch. We will carry these calculations

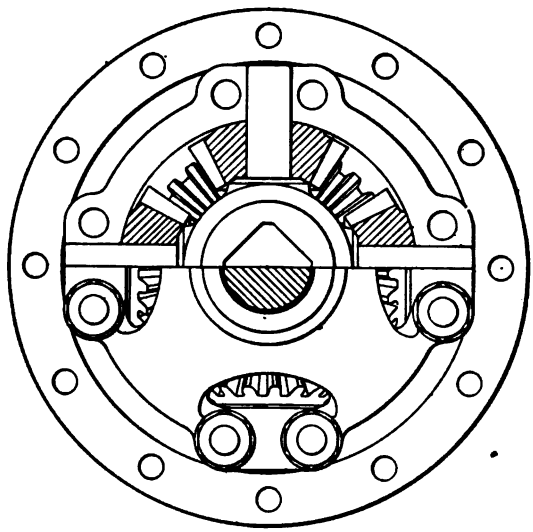

FIG. 118.—BEVEL DIFFERENTIAL PARTLY IN SECTION.

through for a rear axle differential for a car with four cylinder 4x5 inch motor, a low gear reduction of 3.2 and a bevel gear ratio of 3.5. The maximum rear axle torque therefore is

$$3.2 \times 3.5 \times 133 = 1{,}490 \textit{ pounds-feet.}$$

Let the differential be made with four pinions of 8 pitch; then, according to equation (43) the maximum pitch diameter of the master gears should be approximately

$$\sqrt{\frac{1{,}490}{70 \times 0.4 \times 4}} = 3.65 \textit{ inch,}$$

and the number of teeth figures out to 29. However the number

of teeth must be divisible by 4, there being four pinions. Hence we will choose 28 teeth. The pinions then should have

$$\frac{28}{1.8} = 16 \textit{ teeth}$$

and their maximum pitch diameter will be 2 inches. The distance of the intersection of the two largest pitch diameters from the centre of the differential is

$$\sqrt{\frac{3.5^2 + 2^2}{4}} = 1.88 \textit{ inches,}$$

hence the face of the gears can be made

$$0.35 \times 1.88 = 0.66 \text{ — } \textit{say, } 11/16 \textit{ inch.}$$

Since we are making the face of the pinion equal to

$$\frac{0.68 \times 100}{1.88} = 36$$

per cent. of the distance from the point of intersection of the largest pitch diameters to the vertex of the cone, and since the strength of the tooth section varies uniformly from the outer to the inner end of the tooth in proportion to the distance from the centre of the differential, the load on the tooth may be considered to be concentrated on the pitch line at

$$\sqrt{100^2 - \left(\frac{100 + 64}{2} \times 36\right)} = 84 \textit{ per cent.}*$$

of the distance between the outer end of the tooth and the apex of the cone, from the apex. Hence the arm through which this pressure acts is

$$\frac{3.5 \times 84}{2 \times 100} = 1.47 \textit{ inches,}$$

and the tangential pressure on the mean pitch circle is

$$\frac{1{,}490 \times 12}{1.47} = 12{,}150 \textit{ pounds.}$$

In Fig. 119 is shown a portion of the top view of an 18 tooth bevel pinion meshing with a 32 tooth bevel gear. Gear and pinion are shown meshed in three relative positions, and it will be seen that in each position there are two or more teeth of the pinion in contact with teeth of the gear. Hence we can figure that the load is taken up on two teeth at each meshing point, and since there are eight meshing points in a four pinion differential, the total load is taken up on 16 teeth, which makes the load per tooth

$$\frac{12{,}150}{16} = 760. \textit{ pounds.}$$

* For an explanation of the method employed see page 225.

The strength of bevel gear teeth can be calculated by a method similar to that of Lewis for spur teeth. The largest section of a bevel gear tooth has the same strength as a tooth of a spur gear of the same pitch and number of teeth, and the strength of the bevel tooth decreases uniformly as the apex of the cone is approached. Since the tooth in the present case extends 36 per cent. of the distance from the base to the apex of the cone, the average strength of the tooth will be about 26 per cent. less than

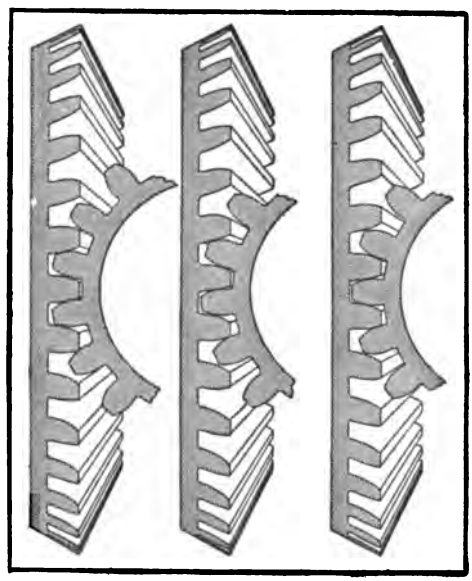

FIG. 119.—EIGHTEEN TOOTH BEVEL PINION AND THIRTY-TWO TOOTH BEVEL GEAR IN DIFFERENT POSITIONS OF MESH, SHOWING THAT THE PRESSURE IS ALWAYS DIVIDED BETWEEN AT LEAST TWO TEETH.

that of a corresponding spur tooth. Substituting in the Lewis formula the values applying to our case, we have

$$760 = S \times 0.4 \times 11/16 \times 0.083 \times 0.74,$$

and

$$S = \frac{760}{0.4 \times 11/16 \times 0.083 \times 74} = 45{,}000 \textit{ pounds per square inch.}$$

This tooth stress is in harmony with the stresses allowed in

change gear pinions as given in the chapter on sliding change gears, remembering that the differential pinions and gears run together little. In reality the stress is lower because the Lewis formula is based on the assumption that the whole tangential force comes on the end of the tooth, and it is obvious that when two or more teeth of one gear are in contact with teeth of the other at the same time, at least one tooth takes its pressure at a point considerably nearer its root, whereby the moment of the pressure is reduced.

The pressure on each pinion pin is

$$\frac{12{,}150}{4} = 3{,}040 \textit{ pounds}$$

and with a unit bearing pressure of 4,700 pounds per square inch the required bearing surface figures out to

$$\frac{3{,}040}{4{,}700} = 0.675 \textit{ square inch.}$$

Since the bearing length is to be to the diameter as 4 to 3, the area will be

$$\frac{4}{3} d^2 = 0.675 \textit{ square inch.}$$

Hence

$$d^2 = \tfrac{3}{4} \times 0.675 = 0.506 \textit{ square inch,}$$

and

$$d = \sqrt{0.506} = 0.71 \textit{ inch—say, } 11/16 \textit{ inch,}$$

whereas the length should be

$$\frac{4}{3} \times \frac{11}{16} = 0.916\text{—}\textit{say, } 15/16 \textit{ inch.}$$

The pinion pins are generally made integral with a central ring having a bearing on the hubs of the master gears, thus forming a spider. Their outer ends may be clamped between the halves of the frame or housing, or they may be flattened off and the holes for them made rectangular, with their long sides parallel with the axis of the differential so the spider may slide in these holes and automatically adjust itself to the position where the pinions mesh equally with both master gears. The hubs of the master gears are generally broached out square to fit to the squared ends of the rear axle shafts. These hubs are provided with a radial face which bears against a corresponding face on the outside of the housing to take up the bevel gear end thrust. Some designers provide bronze bearing bushings and thrust washers, but the majority do not. The flange for the driven bevel gear is formed integral with one-half of the

differential housing, and is often so far offset to one side as to bring the centre of the differential in line with the driving pinion centre.

The Spur Differential—Referring to Figs. 120 and 121 a spur differential consists of two spur master gears mounted on the inner ends of the differential shafts, of a varying number of pairs of spur pinions and of a housing or frame surrounding the whole. The spur pinions are of substantially double the width of the spur gears; the latter are placed some distance apart and the extra width of the pinions extends into this intermediate space where the two pinions of each pair mesh together.

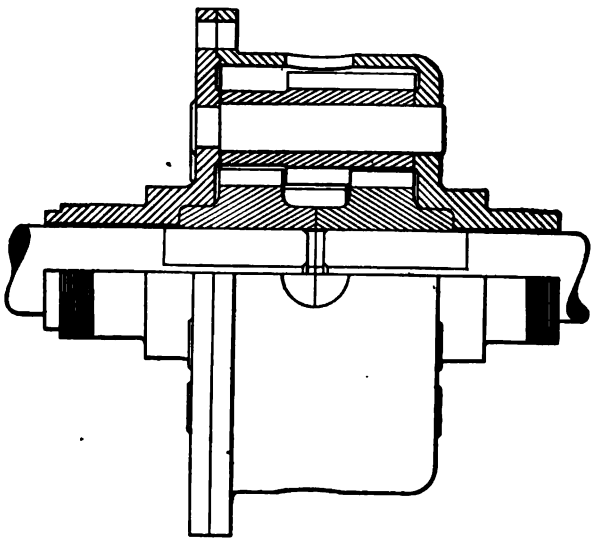

FIG. 120.—LONGITUDINAL ELEVATION OF SPUR DIFFERENTIAL, HALF SECTIONED.

The action of this type of differential is exactly the same as that of a bevel differential.

The pinions of spur gear differentials are made with a very small number of teeth, generally about ten, because any small increase in their size entails a large increase in the bulk of the differential housing. Stub teeth are preferably used, and some makers use a special form of mongrel teeth of still greater strength than stub teeth.

Spur differentials can be calculated on the basis of a tooth stress of about 35,000 pounds per square inch under low gear and full engine power, if the gears are made of carbon steel, heat treated. The stress may seem high, but it must be remembered that the calculation is based on the full engine power, whereas from 15 to 25 per cent. of the engine power will be lost in the change gear, universal joints and rear axle bevel gears. Moreover, in very powerful cars the adherence of the driving wheels to the ground limits the load which can be placed on the differential to a figure smaller than is obtained by

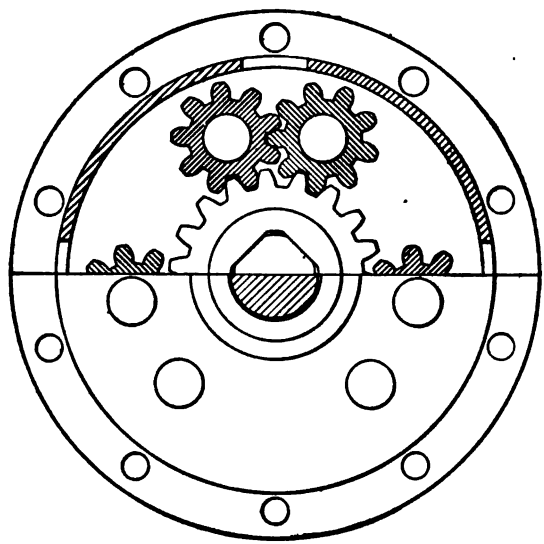

FIG. 121.—END ELEVATION OF SPUR DIFFERENTIAL, HALF SECTIONED.

multiplying the engine torque by the reducing factor between engine and rear axle.

The master gears may be made of a pitch diameter of from 3 to 4 inches, at the option of the designer or according to the size of the driven bevel gear, and either three or four sets of pinions may be used. We will illustrate their calculation by the example of a differential gear for a four cylinder 4x5 inch motor and the reduction ratios mentioned above. We found the maximum rear axle torque to be 1,490 pounds-feet. We

will assume that the master gears have a 3½ inch pitch diameter and 8-10 pitch stub teeth. The pitch line pressure then will be

$$\frac{1,490 \times 12}{1\frac{1}{2}} = 10,220 \textit{ pounds.}$$

Assuming that there are eight pinions, this pressure is transmitted by eight teeth, and the pressure on each is

$$\frac{10,220}{8} = 1,277 \textit{ pounds.}$$

Assuming the pinion to have 10 teeth, for which the constant is 0.041, the necessary width of face is

$$\frac{1,277}{0.041 \times 35,000} = 0.89 — \textit{say, } \tfrac{7}{8} \textit{ inch}.$$

The cases for spur gear differentials are made in two parts which are held together by bolts. The halves should preferably be provided with a telescoping joint, to insure the continued alignment of all parts. One part is usually made in the form of a circular plate, and the other in the form of a cylinder open at one end. Sometimes the driven bevel gear or sprocket is bolted to a flange on the cylindrical part, and the two parts of the housing are held together by means of through bolts. In another design the cylindrical part has a flange at its open end, and bolts are passed through this flange, the end plate of the differential housing and the web of the bevel gear, as shown in Fig. 120.

The lighter spur differentials sometimes have no regular housing, the end bearing plates being held together by bolts and separated by spacers surrounding the bolts.

Lately a number of designs of differential gears have been brought out which prevent a car from losing traction when one wheel stands on slippery ground. Most of them involve some form of one-way transmission device, that is, a mechanism through which power can be transmitted in one direction but not in the other. With the ordinary differential, if one wheel is held from rotating and the frame or housing of the differential is rotated, the other wheel will be rotated at twice the speed of the differential frame. Also, if the housing is held from rotation and one wheel is rotated, the other wheel will rotate in the opposite direction at the same speed. With one of the special differentials, if one wheel is locked or held from rotating, by turning on the other wheel the housing may be rotated, but it is impossible to turn the free road wheel by turning on the housing.

It is self-evident that such a differential does not equally divide the torque between the two driving wheels, for if it did, then, when one wheel was spinning, the other wheel would have no more torque impressed upon it than the spinning one, which would be insufficient to propel the car. The relative torques impressed upon the two wheels respectively depend upon the resistance encountered by them. Ordinarily in straight-ahead motion, both wheels encounter substantially equal resistances, and the driving torque on both is therefore the same. But in turning a corner the outer wheel is com-

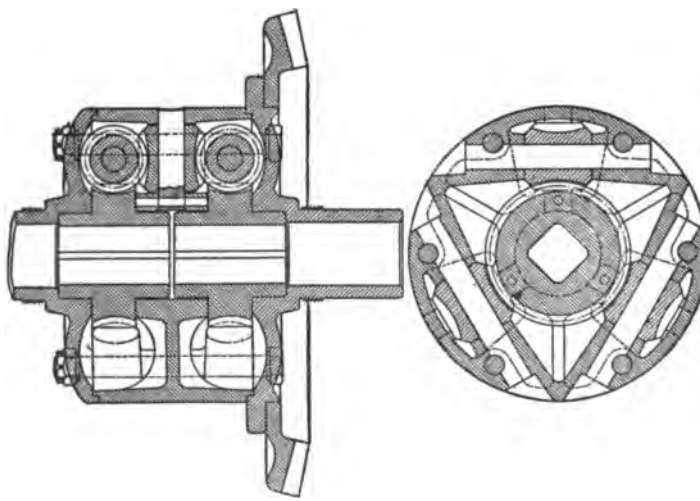

FIG. 122.—M & S HELICAL DIFFERENTIAL GEAR.

pelled to run ahead of the differential housing or frame, and all the torque is taken by the inner wheel, the conditions then being the same as when one wheel has no traction.

One of the best known of these special differentials is the M & S, illustrated in Fig. 122. Each of the axle shafts carries a helical gear and the differential spider carries three helical pinions with radial axes and six such pinions of which each one meshes both with one of the radial pinions and with one of the gears on the axle shafts. It is well known that in helical gears, if the angle of spiral of the driving gear is very small, power cannot be transmitted through the pair in the reverse

direction, because the frictional resistance is too great, and this is the principle made use of in this differential.

Gearless Differential—From the above it will be gathered that the special feature of these differentials is that it is impossible to transmit motion from the differential spider to one of the side members. Differentials embodying this feature can also be made without the use of toothed gears, and one such design is illustrated in Fig. 123. The right and left ratchets, which are keyed to their respective axle shafts, are independent and free to rotate inside of the housing. The two round members with knobs at their ends and centre are the pawls which form the interlocking media between the driving sectors and ratchets. The right hand view shows the right hand end of the top pawl in a tooth of the right hand ratchet, being driven by the contact face of the driving sector and driving the

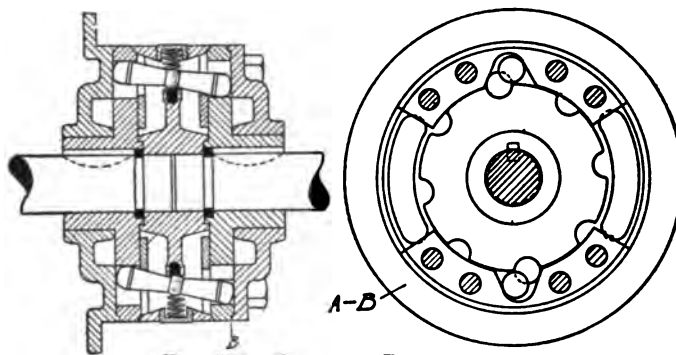

FIG. 123.—GEARLESS DIFFERENTIAL.

ratchet forward. In the same manner the left ratchet is driven forward by the lower pawl, which is engaged at its left end. Thus both wheels are driven forward positively and neither can spin, as with the common differential.

To drive backwards, the differential housing starts to move to the left and pushes the end of the pawl out of the ratchet tooth, which throws the opposite end of the pawl down into the tooth of the opposite ratchet. The contact face of the reverse driving sector engages and drives the wheel backward. The lower pawl acts in the same manner. In turning a corner, imagine that the car is being driven forward and is to be turned to the left. The right wheel starts to revolve faster than the left and causes the right hand ratchet to move faster than the differential housing, which latter can only go

as fast as the inner or slower moving wheel. The ratchet pushes the end of the pawl out of its tooth thus allowing the ratchet to have a free movement forward. As soon as the corner has been made and both wheels are revolving at equal speed, the spring at the centre of the pawl pushes the end of the pawl back into engagement and the drive is again taken up by both wheels.

When the wheels propel the drive shaft, as in case of coasting or braking through it, both ratchets start to turn faster

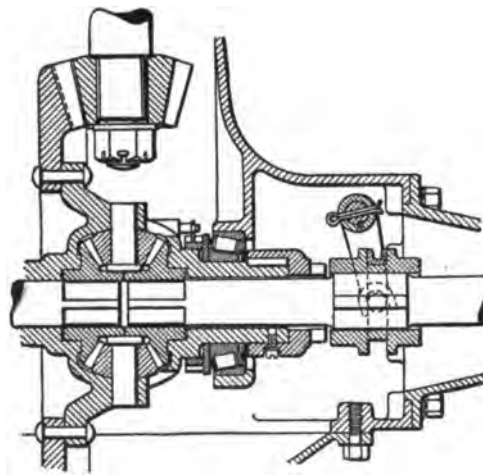

FIG. 124.—DIFFERENTIAL LOCK.

than the housing, and push the engaged ends of the pawl out of engagement and the opposite ends into the driving position in the opposite ratchet teeth, thus causing the ratchets to propel the drive shaft.

Differential Lock.—A few of the heavier designs of trucks are provided with differential locks which enable the driver to put the differential gear out of operation at will. The problem of working out a neat and all round satisfactory differential lock presents considerable difficulty, which is probably the reason that this device is not more extensively used. Fig. 124 illustrates a differential lock of typical design. A jaw clutch is provided, sliding on a squared section of one of the differential shafts, by which the differential housing may be locked to this shaft.

CHAPTER VIII.

UNIT POWER PLANTS AND TRANSMISSION AXLES.

When a line of shafting is supported in several bearings, it is necessary to either mount all of the bearings in absolute alignment and keep them so, or to make the shaft in sections and connect the sections by universal joints. In an automobile power plant we have such a line of shafting extending through the motor and change gear box, which may be supported by from four to ten bearings. It is an easy matter to keep all of the bearings in the crankcase or those in the gear case in alignment. However, it is virtually impossible to insure continued alignment of the gear box bearings with those of the crankcase if the two cases are mounted separately on a light pressed steel frame, as is customary. Owing to the severe shocks and wrenches which it receives in driving at speed over rough roads, the frame "weaves" and distorts and cannot at all be depended upon to maintain the bearings in alignment.

Two courses are open to the designer for overcoming this difficulty. He may either connect the crankshaft to the primary shaft of the gear box through a double universal and sliding joint, or he may tie the gear box to the crankcase in such a manner that the whole forms a single rigid structure. The former arrangement permits of slight displacements of one of the cases with respect to the other in every direction. The second arrangement gives what is known as the unit power plant, which is used more especially on low and moderately powered cars.

What is perhaps the most common type of unit power plant is illustrated in Fig. 125. Engine, clutch and gear box are located in their usual relative positions, the gear box being brought as close to the engine as possible. The crankcase is provided at the rear with a flat cylindrical extension designed to house the flywheel. This extension has a flange at its open end to which the gear box is bolted, the latter being formed with a forward

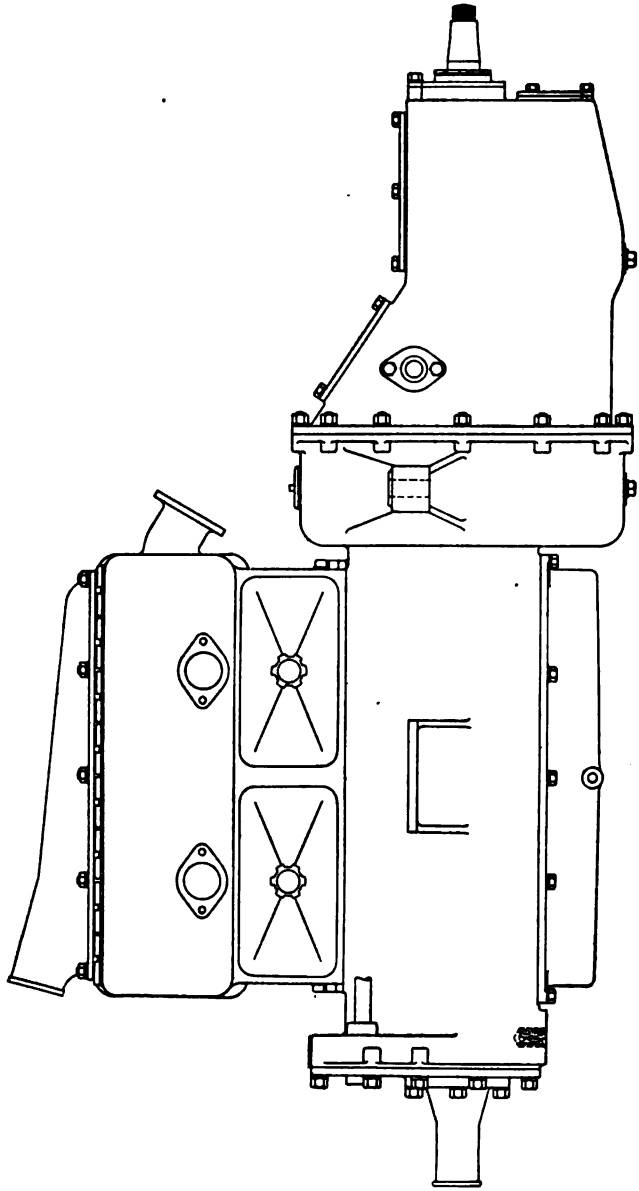

FIG. 125.—UNIT POWER PLANT.

extension designed to house the friction clutch. The exact location of the vertical joint varies somewhat in the different designs, but a common feature of this type of unit power plant is that the entire unit may be separated into two parts longitudinally and forms three chambers, for the engine crankshaft, for the flywheel and clutch, and for the change gear, respectively. Of course the crankcase may be divided horizontally through the centre of the crankshaft, but the tendency is to use barrel type crankcases in connection with this type of unit power plant. In practically all unit power plants the two shafts of the change speed gear lie in a vertical plane, this arrangement tending to greater symmetry of the whole design.

Access to the crankshaft bearings is afforded by either a removable bottom plate of the crankcase or large hand-hole cover plates on one side, while the interior of the clutch and gear compartments may be reached through large hand-holes.

Among the advantages of such a unit power plant may be mentioned the fact that it simplifies the construction in that it obviates the need of a double universal joint between the engine and change gear and makes it possible to support the whole unit upon the frame at three or four points instead of an equal number of supports for either part. Moreover, the complete enclosure of all moving parts tends to the reduction of noise, to increased cleanliness and to better lubrication and protection of wearing parts from dust and grit. The change gear is brought somewhat closer to the engine and is therefore likely to come in a more accessible position underneath the front seat floor boards. However, the main object of unit construction and its chief advantage is that if the bearings are once properly lined up, they will remain in alignment, and hence there is no danger of binding and consequent injury to the bearings.

Three Point Support.—Although the three point support is applicable to engines and gear boxes mounted separately, it is specially advantageous in the case of unit power plants. The principle involved in the three point support is perhaps best explained by reference to a three legged stool which will stand securely on an uneven floor, whereas a four legged one will not. In a motor car, if the frame supporting the power plant should be distorted, it would not subject the case and arms to any stress if the power plant were supported at three points, whereas if it was supported at four points the rigidity of the case and its arms would resist distortion of the frame, and hence these parts would be severely stressed by distorting in-

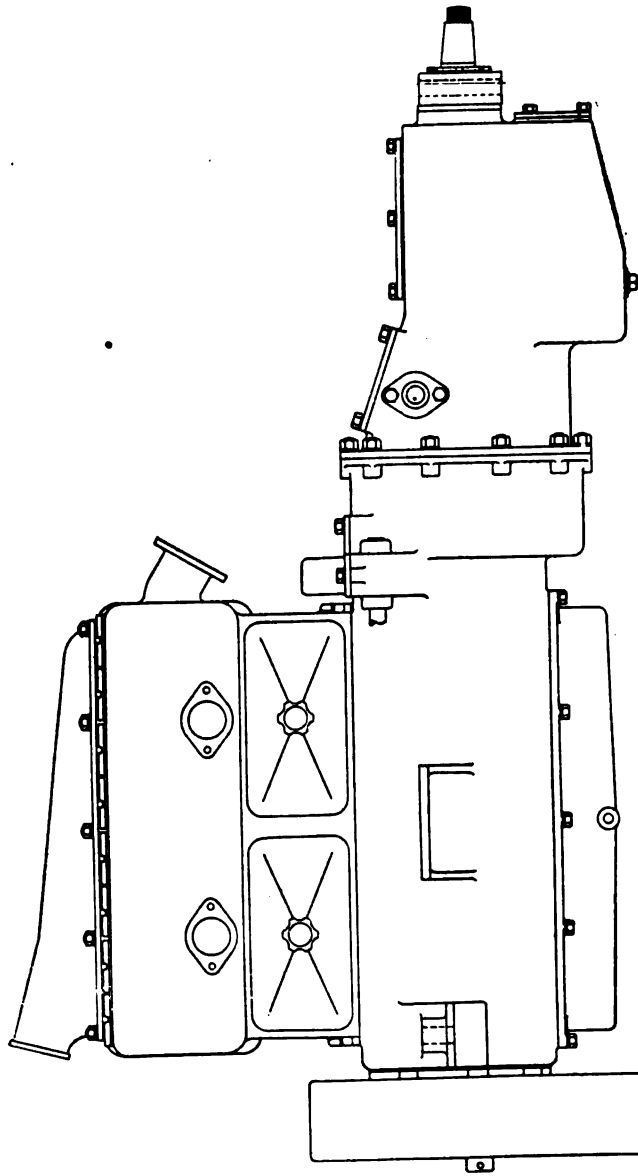

FIG. 126.—UNIT POWER PLANT WITH FRONT MOUNTED FLYWHEEL.

fluences. Crankcases and gear boxes supported at four points are sometimes broken by excessive road strains on the frame.

In Fig. 125 the power plant has one point of support at the front, a cross member of the frame passing underneath the crankcase, and having the latter fastened down to it by two bolts located close together at the middle of the crankcase bottom. The other two points of support are at the side of the flywheel housing, which is cast with laterally extending arms which rest on top of the subframe or connect through hangers with the main frame. An alternate method consists in casting the crankcase with two lateral supporting arms near its front end and have the third point of support at the rear of the gear box, the rear bearing hub of the latter being developed in the form of a supporting bracket resting on a cross member of the frame. There are two distinct arrangements of this rear support. The simplest consists in passing two long bolts through the rear bearing hub and the supporting frame cross member. This does not give a true three point support, as there are in reality two points at the rear, but since they are comparatively close together, they act substantially as a single support. In order to obtain a single support at the rear, the rear bearing hub has a part spherical surface turned upon it which rests in a spherical socket bolted to the frame cross-member. The socket must, of necessity, be made in halves, and for convenience in machining the rear bearing hub is made separate and bolted to the casing. A similar supporting method may be applied to the front bearing of the engine.

Of course, where a supporting arm has a large flat bearing surface and is bolted down to the supporting member it is not quite correct to speak of a "point" of support. In such a case there are in reality three or four supporting surfaces instead of three or four points of support, and it is easily seen that if the surfaces of a "three point support" are fairly large there must still be considerable strain in the material near the supporting surfaces if the frame is distorted. In order to eliminate these strains as far as possible the Midland Motor Car Company makes the two forward supports of the power plant on the main frame in the form of trunnions and sliding blocks, the trunnions being formed on the ends of a trussed cross member and the blocks sliding in the channel of the frame. The latter is "swept in" in front, which allows the cross member to be inserted into the frame channel from the rear.

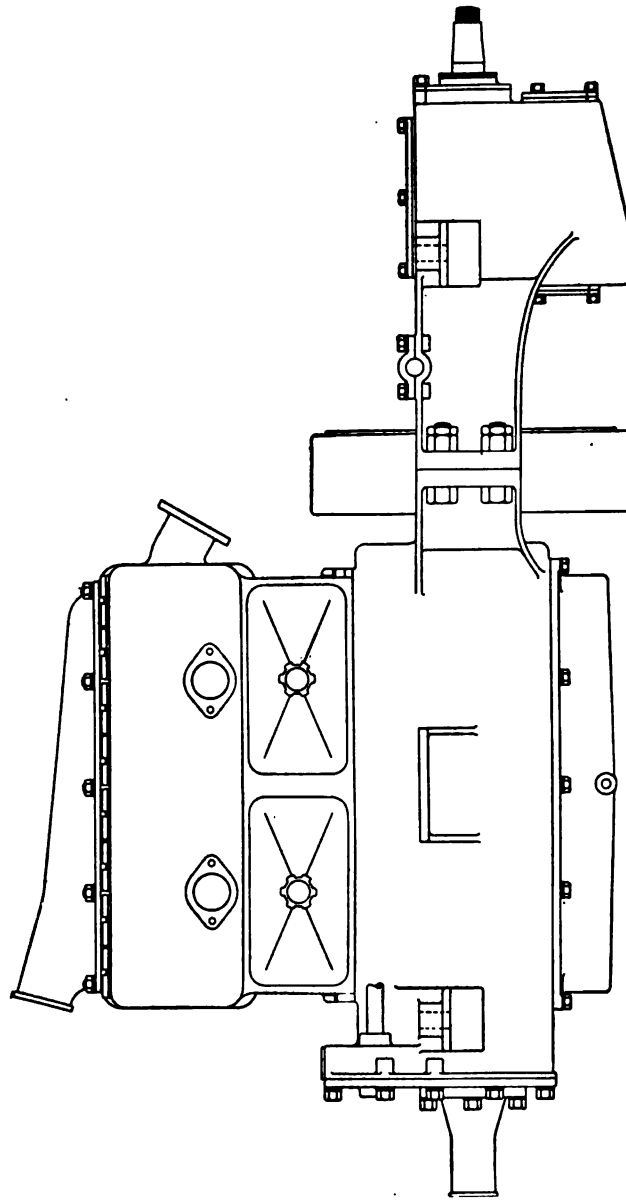

FIG. 127.—CRANK CASE AND GEAR BOX CONNECTED BY YOKE.

Flywheel in Front —One of the chief difficulties encountered in combining the engine and the change gear in a single unit is due to the fact that the flywheel is located between them and to enclose it requires a great deal of metal, adding both to the weight and the cost of the car. In four cylinder motors there is a tendency to use a flywheel of rather inadequate capacity when it is to be enclosed, which somewhat detracts from the steady running qualities of the car. To overcome this difficulty two expedients may be resorted to. The first consists in placing the flywheel at the front of the engine, as shown in Fig. 126. This eliminates the flywheel housing, and permits of bringing the gear box considerably closer, but there are also a number of objections to this practice. Its purpose being to equalize the torque of the engine before it is transmitted to the change gear, the logical place for the flywheel seems to be between these two parts. The crankshaft and its bearings are undoubtedly subjected to more severe usage with the flywheel located in front. With the very considerable weight of the flywheel almost directly over the front axle the strains on the front tires are increased. However, with the flywheel in this position its diameter is less closely limited, and some manufacturers use the front mounted flywheel as a radiator fan. With this construction the timing gears of the engine are usually placed at the rear end, where they are more accessible.

An alternate construction consists in joining the crankcase and gear box by a yoke running around the flywheel, as illustrated in Fig. 127. Either both cases and the yoke may be cast in a single piece; half of the yokes may be cast with either case (as in Fig. 127), or the yoke pieces may be separate and secured to the two cases by cap screws or bolts. This method enables a saving in weight to be effected as compared with that illustrated in Fig. 125, and is free from the objections urged against the front mounted flywheel. It has been adopted on several American cars in recent years. The yoke around the flywheel is conveniently situated for supporting the bearing for the clutch and brake pedal shaft.

Unit power plant construction has become extremely popular in this country.

Transmission Axles —Instead of combining the gear box with the engine, some makers secure it rigidly to the rear axle housing, thus forming what is known as a transmission axle. The leading exponent in America of this system of construction has been the Packard Co. The advantages of this arrange-

ment are that it does away with a separate gear box, thus eliminating one unit, that it permits of using a comparatively long propeller shaft whose angularity will not vary much under the play of the body springs and the absolute value of which will always be small, and that the propeller shaft and universal joint

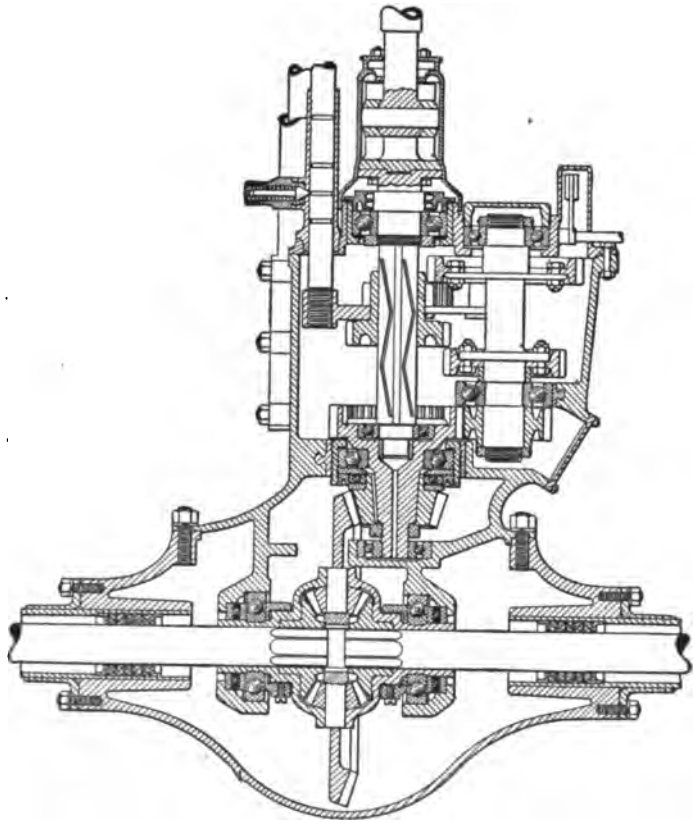

FIG. 128.—SECTIONAL VIEW OF PACKARD CHANGE GEAR AND REAR AXLE DRIVE (OLD MODEL).

run always at engine speed, and are never subjected to any greater torque than the maximum of which the engine is capable, hence they can be made somewhat lighter. Besides this, the system does away with two or more universal joints in the transmission line, requiring the use of only one such joint on

at most two. The chief disadvantage of the transmission axle is that it materially increases the unsprung weight supported by the rear wheels and tires, and thus tends to increase the wear of the tires. Some difficulty is also met with in arranging the control connections between the change gear lever on the spring supported frame and the sliding bars in the unsprung gear box in such a manner that the play of the springs will neither affect the position of mesh of the sliding gears nor cause the control lever to move on its sector or quadrant and produce an unpleasant rattle.

The majority of the transmissions built together with the rear axle are of the three speed and reverse selective sliding type. It is important that the length of the gear box be kept as small as possible so that the moment of its weight around the axis of the rear axle may not be too great. Those types of reversing gears which economize space in the longitudinal direction are therefore particularly suitable for rear axle gear boxes. In

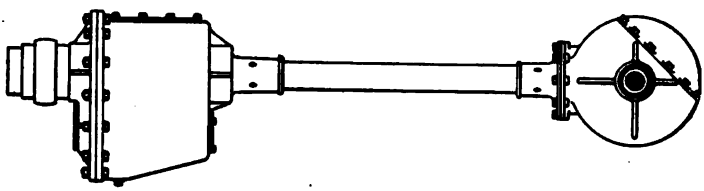

FIG. 129.—GEAR BOX ON FORWARD END OF TORQUE TUBE.

these gear boxes the two shafts usually lie in a horizontal plane (Fig. 128), since it is not practicable to place the secondary below the primary shaft, as that would reduce the road clearance too much, and the secondary shaft cannot well be on top, since it is desirable to have the secondary gears run in oil and the height of the oil in the case is limited by the level of the protruding shafts. The constantly meshed gears and direct drive clutch are generally placed at the rear, as some space in the longitudinal direction can be saved in this way.

An arrangement of the gear box which affords some of the advantages of the transmission axle and does away with some of its disadvantages is illustrated in Fig. 129. The gear box and rear axle here also form a unit, the two being connected by the propeller shaft tube, or torque tube, and the gear box hung from a cross member of the frame by a ball and socket joint at its forward end. As in the case of transmission axles,

the angle between the two members of the universal joint varies but little and is always small. Most of the weight of the gear box is spring-supported and although it changes its position relative to the frame as the body springs compress and extend, this change in position is relatively much smaller and the difficulty of properly connecting up the control lever is correspondingly reduced.

Straight Line Drive—The last two mentioned arrangements of the gear box lend themselves particularly to that form of construction known as the straight line drive—that is, such an arrangement of the different parts that when the car carries a normal load the engine crankshaft, gear box primary shaft and propeller shaft are in a straight line. Under these conditions motion is transmitted uniformly through a single universal joint, and owing to the relatively large distance between the rear axle and the universal joint the play of the body springs has little influence on the drive. In order to insure this straight line relation of crankshaft and propeller shaft it is generally necessary to carry the engine in a slightly tilted position, with the rear end somewhat lower than the front, as if the engine crankshaft were placed at the same level as the rear axle shafts the engine flywheel would not clear the ground sufficiently. In all constructions in which there is only a single universal joint in the propeller shaft, a substantially straight line drive should be aimed at, for, as shown in the chapter on Universal Joints, when the two shafts make an appreciable angle with each other there are serious fluctuations in the ratio of transmission, and consequently the transmission parts, and particularly the tires, are subjected to extra severe strains.

CHAPTER IX.

BEVEL GEAR DRIVE AND REAR AXLE.

At present the great majority of pleasure cars are driven through a shaft and bevel gears. The advantages of this drive are that it can readily be completely enclosed, oil and dustproof, and that it is reasonably efficient and noiseless. Any desired gear reduction up to 5 to 1 can easily be obtained. A disadvantage of the bevel gear drive, as compared with the chain drive, is that with the former it is difficult to provide more than one gear ratio.

The two chief elements of a shaft drive are the propeller shaft and the bevel gearset. The drive also comprises either one or two universal joints. It was shown in a previous chapter that two such joints are necessary if an absolutely uniform transmission of motion from the gear box or engine to the rear axle is required, and on the higher grades of cars two universals are generally employed. However, by making the propeller shaft comparatively long, and placing the gear box and rear axle in such relation to each other that when the vehicle carries a normal load, the primary shaft of the change gear and the propeller shaft are nearly in line, many designers get along with a single universal, which they insert between the transmission tail shaft and the propeller shaft.

Types of Rear Axles.—Rear axles are divided into live and dead axles. A live axle is an axle through which the propelling power is transmitted to the driving road wheels, and a dead axle is one which merely carries the weight of the frame and body. Cars driven by shaft and bevel gears, shaft and worm gears, or by a single chain, have live axles, whereas cars driven by double (side) chains have dead axles.

A live axle has two principa[1] functions to perform, viz., to support the weight carried upon the rear springs, and to transmit the power to the road wheels. These two functions can be performed by a simple revolving axle, but in that case the direc-

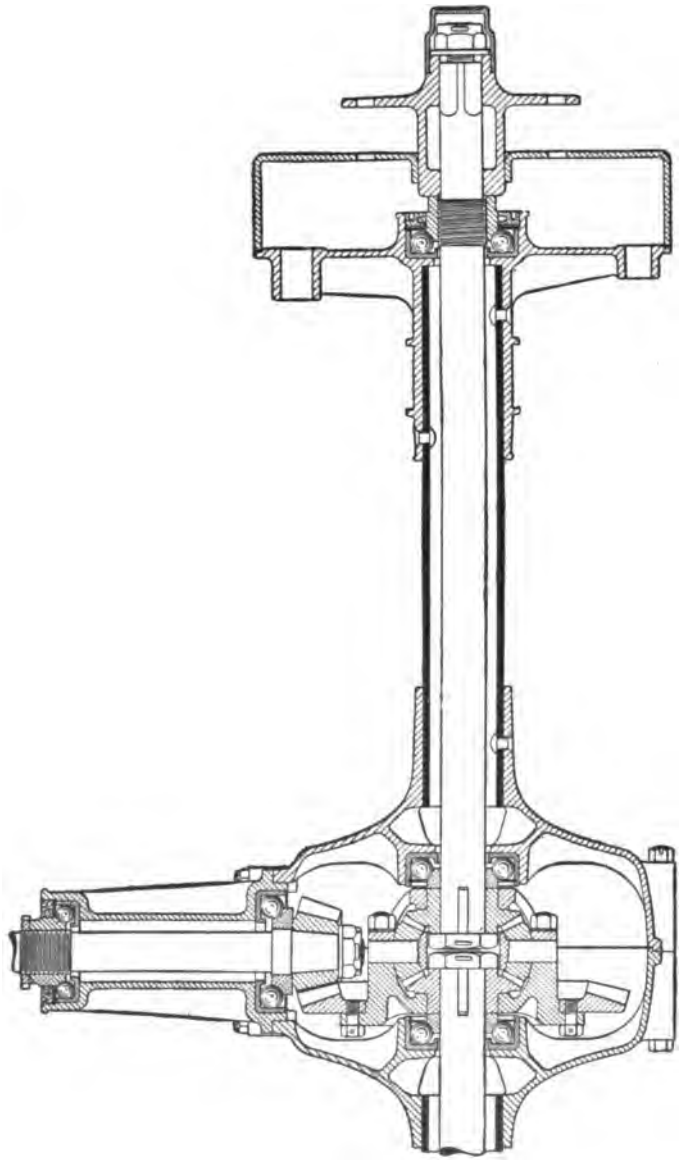

FIG. 130.—PLAIN LIVE AXLE.

tion of the stress due to the weight carried changes constantly, and since the resistance of the material is greatly lessened if the stress alternates in direction, it is much preferable to support the weight on non-rotating parts. Some of the earlier shaft and single chain driven cars had rear axles consisting merely of a revolving shaft running in bearings secured to the body springs. The axle had one road wheel rigidly secured to it, the other wheel being secured to a sleeve free upon the shaft; one master gear of the differential was secured to the shaft, and the other to the sleeve. However, for the reason above stated, practically all modern live axles comprise one part—the housing—for supporting the load, and another—the axle shafts—for transmitting the power.

In the normal operation of a car there are three distinct sources of stress in a rear axle, viz., the weight of the frame and body resting on the axle, the bearing load due to the bevel gear tooth pressure, and the torsion on the axle shafts. An axle in which all of these stresses come on the axle shafts is known as a plain live axle. An axle in which the axle shafts are subjected only to torsional stress and the stress due to the weight of the frame and body, is known as a semi-floating axle, and an axle in which the shafts are relieved of all except torsional stress, is known as a full floating axle.

Each rear axle has two sets of bearings, viz., those supporting the differential and those through which the axle is supported in the road wheels. The former, which we may call the differential bearings, are subjected to a load due to the tooth pressure of the bevel driving gears, while the latter are subjected to a load due to that part of the weight of the frame and body which rests on the rear springs. It is directly apparent that in the plain live axle, illustrated in Fig. 130, the load due to the bevel gear tooth pressure is taken up by the axle shafts, as is the load due to the weight of the rear part of the car. The stress in the shafts due to these loads reverses twice every revolution of the axle, and since it adds to the torsional stress of driving, it can readily be seen that the axle shafts in this type of axle must be made very rugged in order to stand up to the work. As a matter of fact, axle breakages were rather frequent when axles of this type were common.

In the semi-floating axle illustrated in Fig. 131 the axle shafts are relieved of the bevel gear tooth pressure. This is accomplished by carrying the differential gear directly in bearings in the axle housing, instead of supporting it upon the axle shafts.

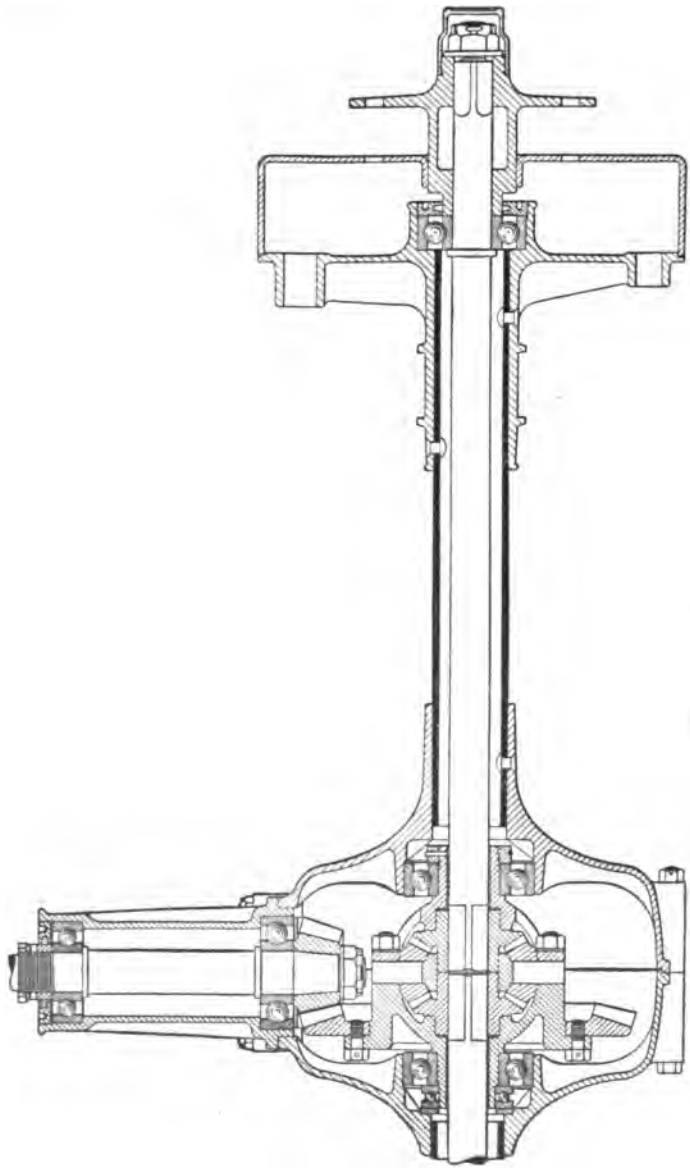

FIG. 131.—SEMI-FLOATING AXLE.

The latter are made somewhat smaller in diameter than the bore of the hubs of the differential housing, and pass through these hubs without contacting with them, establishing driving connection with the differential master gears by square, hexagonal or fluted driving joints.

The next step in axle development was to relieve the outer end of the axle shafts of bending stress, in the same way as the inner ends. This is accomplished (see Fig. 132) by extending the axle tubes entirely through the wheel hubs, and mounting the wheel bearings on the outside of these tubes, so that the weight load is transmitted directly from the axle housing to the wheel hub. The axle shafts extend through the housing, and their outer ends connect with the wheel hubs through driving dogs or positive clutches. With an axle of this design it is possible to entirely withdraw the driving shafts from the axle without removing the axle from the car.

An intermediate type between the full floating and semi-floating axles has recently been used to some extent, differing from the full floating in that its shafts are rigidly connected to the wheel hubs—which latter are mounted on bearings on the outside of the axle housing—by driving flanges bolted to the wheel hubs, and either forged integral with the axle shafts or securely keyed thereto. In an axle of this type the shafts, although relieved of weight carrying loads, are subjected to endwise stresses due to skidding, and it has been suggested to call these three-quarter floating axles. In a three-quarter floating axle there is only one bearing in each wheel hub, which results in economy of manufacture. There is also less strain on the bearings from lateral shocks on the wheels than in a full floating axle.

Full floating axles in which the shafts are entirely relieved of all but torsional stresses are generally regarded as the most highly developed type, and are widely used on high grade cars. They are more expensive to manufacture than semi-floating and plain live axles.

Shaft Materials.—Propeller shafts and rear axle driving shafts may be made from 30 point carbon steel, 45 point carbon steel, 30 point carbon 3½ per cent. nickel steel, vanadium steel or chrome nickel steel. In each case the material must be heat treated, as a suitable heat treatment almost doubles the elastic limit in some instances. The heat treatment generally consists

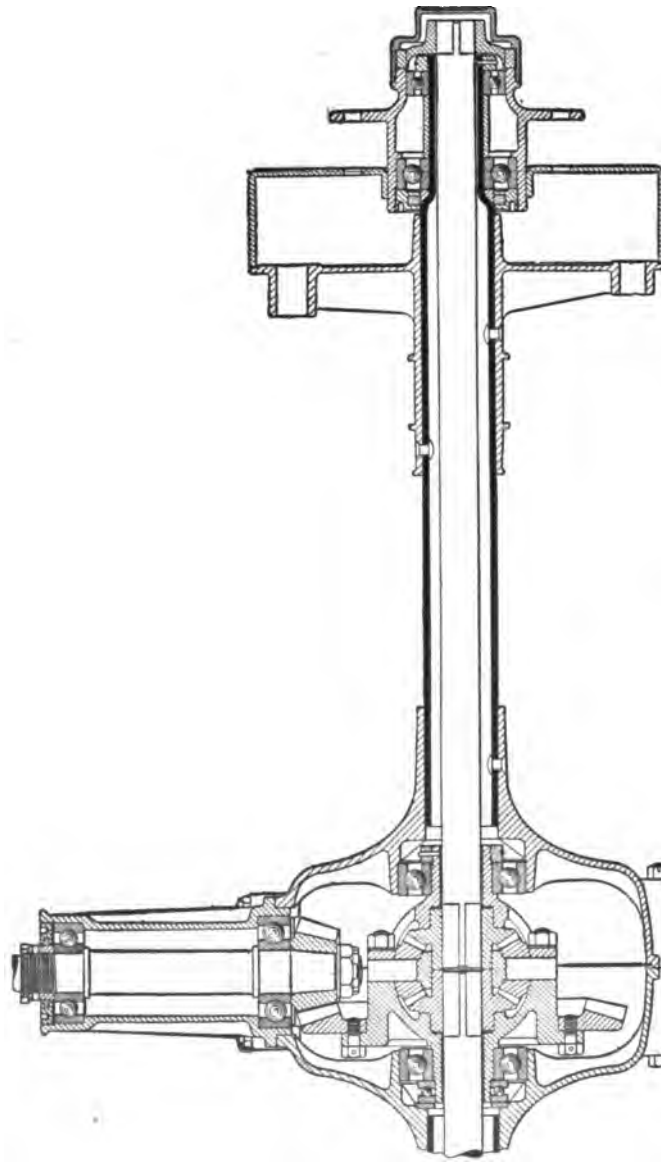

FIG. 132.—FULL FLOATING AXLE.

in quenching the steel in oil at a suitable temperature, and then reheating it to a certain lower temperature from which it is cooled slowly. Thus the standards committee of the Society of Automobile Engineers recommend the following treatment for 35 point carbon steel: After forging or machining heat to 1500°-1550° Fahr., cool slowly, reheat to 1450°-1500° Fahr., quench, reheat to 600°-1200° Fahr., and cool slowly. The higher the reheating temperature the tougher the steel will be, but the lower the reheating temperature the greater will be its tensile strength. The steel has a tensile strength of 50,000 pounds per square inch in the annealed condition, and about twice that when heat treated and drawn at a low temperature. For the 45 point carbon steel the same heat treatment is recommended. In both cases the parts may be machined after they have cooled from the first heating. The 45 point carbon steel attains a tensile strength of 125,000 pounds when drawn at a low temperature and 95,000 pounds when drawn at a high temperature. The elastic limit of this steel when heat treated varies between 90,000 pounds and 60,000 pounds. The heat treatment for the 3½ per cent. nickel steel is comparatively simple, consisting in heating to 1500°-1600° Fahr., quenching, heating to 600°-1200° Fahr., and cooling slowly. This treatment increases the elastic limit of the steel from 55,000 to as much as 160,000 pounds per square inch. The elastic limit of chrome nickel steel after heat treatment may be as high as 175,000 pounds per square inch.

The heat treatments giving the extreme elastic limits cannot, however, be used for transmission shafts, which must be made of relatively tough material and also must be worked after being heat treated, which means that the material must not be too hard to machine satisfactorily. An elastic limit of 100,000 lbs. per square inch for nickel steel and 120,000 lbs. per square inch for chrome nickel steel is about all that is generally obtained in shafting material. That the elastic limit even of steel of the same denomination may greatly vary with the composition and the heat treatment is shown by figures given in a paper read before the American Society of Mechanical Engineers by John Younger, of the Pierce-Arrow Motor Car Company. This concern, in its 5-ton trucks, originally used rear axle shafts made of chrome nickel steel containing 0.20% carbon, 1.5% chromium, 0.30% manganese, 4% nickel, 0.20% silicon and less than 0.04% phosphorus and sulphur, which showed an elastic limit of 90,000 lbs. per square inch and an ultimate strength of 105,000 lbs. per square inch. These shafts gave trouble by breaking at the ends of the fluted

portion, and another steel was then substituted containing 0.30% carbon, 0.50% manganese, 1.5% chromium and 3.5% nickel, which after heat treatment showed an elastic limit of 175,000 lbs. per square inch and an ultimate strength of 185,000 lbs. per square inch. This proved entirely satisfactory.

Higher grades of steel are usually employed in the rear axle drive shafts than in the propeller shaft, for the reason that an increase in the diameter of the axle shafts, necessitating a corresponding increase in the diameter of the axle tubes, bearings, etc., entails a comparatively large increase in weight, and that dead weight. Besides, with the usual reduction ratios the torque on each rear axle shaft is twice as great as the torque on the propeller shaft, or more. Of fourteen propeller shafts investigated by Russell Huff, eleven were made of medium carbon steel, containing for the most part 0.35% carbon; two were made of chrome nickel steel and one of chrome vanadium steel. Of the rear axle shafts of the same cars only one was of carbon steel, while eight were of chrome nickel steel, four of nickel steel and one of chrome vanadium steel. Mr. Huff calculated the factor of safety in each case and found the average value to be 5.8 for the propeller shafts and 2.7 for the rear axle shafts, both based on the elastic limits of the materials. Half of the cars had transmission axles. For the other half the average propeller shaft factor of safety was only 3.75.

Calculation of Shaft Diameters—Propeller shafts and driving shafts of full floating type rear axles are subjected to torsional stresses only, and may therefore be calculated by the same methods. The diameters of these shafts depend to quite an extent upon the method of fastening employed at their ends. One formerly common method consists of milling down the ends of the shaft to an approximate square whose width of face is about 0.8 times the diameter of the shaft, and broaching out the hub of the universal joint fork, etc., correspondingly. Unfortunately this greatly reduces the strength of the shaft at the joints, and the excess strength of the shaft proper is absolutely useless. The square portion of the shaft should gradually merge into the round section, in order that there may be no concentration of stress at a sudden change in the section. The strength of the square portion of the shaft is only about 0.7 times that of the full shaft. In order to save the excess weight in the propeller shaft, due to the greater torsional strength of the full round, as compared with the square section, some manufacturers use propeller shafts of square section, thereby saving about 20

per cent. in weight. Hexagonal joints cause less loss of strength than square joints, and are used to some extent.

A second method of fastening the universal joint forks, gears, etc., to the shafts consists in keying them to a tapered seat. This also slightly reduces the strength of the shaft, but just how much can only be conjectured. The most approved method of securing these parts to driving shafts consists in fluting the shafts and broaching out the hubs, using either four or six flutes. The loss in strength due to the flutes is considerably less than that due to squaring the shaft. If it is desired to use the lightest possible propeller shaft, or rear axle driving shafts, the ends are upset so that after they are squared or fluted they are at least the same strength as the circular section of the shaft proper. This practice prevails to a large extent in the manufacture of the highest grade of cars.

Tests of Fluted Shafts—Comprehensive torsion tests of plain and fluted shafts have been made by C. E. Larard, whose results are contained in a paper presented to the Incorporated Institution of Automobile Engineers in London in January, 1911. Mr. Larard's tests covered two materials, viz., mild steel and nickel steel. These tests were made more particularly with a view to determine the strength of fluted shafts for change gear boxes, hence the use of mild steel of only about 0.15 per cent carbon. This steel is suitable for case hardening, a treatment required by sliding gear shafts, but is not adapted for propeller shafts owing to its low elastic limit. The results are here given to show the effect of fluting on the torsional strength of shafts.

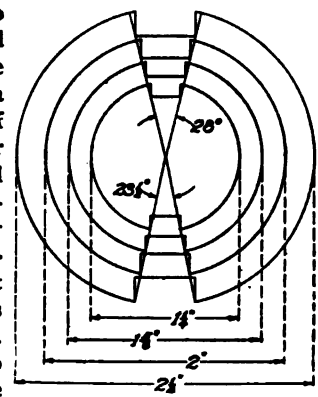

FIG. 133.—SECTIONS OF FLUTED SHAFTS TESTED.

Mr. Larard's tests on carbon steel were made on four pairs of specimens, one specimen of each pair having six keyways, while the other one was a plain cylinder of a diameter equal to the bottom diameter of the fluted shaft. The largest fluted shaft was of 2½ inches, and the smallest of 1¼ inches outside diameter, the corresponding plain shafts were of 2 and 1 inch diameter respectively. The angular extent of the

keyways is shown in Fig. 133. In the following table are given the most important results of the tests on these specimens.

TABLE VII.—TORSION TESTS OF MILD STEEL SHAFTS.

Form of Specimen.	Diameter of Specimen. Outside, Ins.	Diameter of Specimen. Bottom of Keyway, Ins.	Particulars of Keyway. Width, Ins.	Particulars of Keyway. Depth at Edge, Ins.	Limit of Elasticity in Pounds-Inches.	Torque at Fracture in Pounds-Inches.
Fluted	2½	2	½	5/32	16,100	155,000
Plain	2				14,800	90,800
Fluted	1 13/16	1 11/16	3/16	3/16	7,400	57,700
Plain	1 11/16				6,400	41,600
Fluted	1⅛	1⅛	11/64	⅛	4,430	38,000
Plain	1 11/16				4,850	28,100
Fluted	1¼	1	¼	⅛	2,750	16,550
Plain	1				2,680	11,700

Comparing the figures of the several pairs in the above table, it will be seen that in each case the elastic limit of the plain specimens is slightly less than that of the fluted specimens, thus showing that some strength is added by the keys. The maximum torques which the shafts will withstand also are slightly greater in the case of the fluted shafts than in that of the corresponding plain shafts. It was found from these tests that a fluted shaft of diameter d is equal to a plain shaft of diameter $0.86d$, as far as the elastic limit is concerned.

Similar tests were made with two sets of fluted shafts of nickel steel, of the dimensions shown in Fig. 133. One of each pair was tested in the condition (except for the machining) in which it was delivered from the forge, while the other was oil hardened before machining and testing. The results of these tests are given in the following table:

TABLE VIII.—TORSION TESTS OF NICKEL STEEL SHAFTS.

Treatment of Material	Diameter of Specimen. Outside, Ins.	Diameter of Specimen. Bottom of Keyway, Ins.	Particulars of Keyway. Width, Ins.	Particulars of Keyway. Depth at Edge, Ins.	Limit of Elasticity in Pounds-Inches.	Torque at Fracture in Pounds-Inches.
Normal	2½	2	½	5/32	41,800	226,200
Oil Hardened..	2½	2	½	5/32	78,100	265,200
Normal	1 13/16	1 11/16	3/16	3/16	23,000	107,200
Oil Hardened..	1 13/16	1 11/16	3/16	3/16	39,600	116,000
Normal	1⅛	1⅛	11/64	⅛	11,800	68,000
Oil Hardened..	1⅛	1⅛	11/64	⅛	26,800	77,000
Normal	1¼	1	¼	⅛	5,900	30,360
Oil Hardened..	1¼	1	¼	⅛	12,200	33,400

The most remarkable result of Mr. Larard's test is perhaps the low elastic limit of mild steel as compared with the breaking strength. It will be seen from Table VIII that oil hardening substantially doubled the elastic limit.

In calculating the diameter of the shafts a stress of 20,000 pounds per square inch may be allowed in the case of heat treated carbon steel, 30,000 pounds per square inch in the case of heat treated nickel steel, and stresses proportional to their respective elastic limits in the cases of other steels. The conventional formula for the torsional strength of cylindrical shafts is

$$T \times 12 = 0.196\, d^3 S,$$

and since a squared shaft is only 0.7 times as strong, and the maximum safe stress for carbon steel is 20,000 pounds per square inch, we find the maximum safe load to be

$$T \times 12 = 0.7 \times 0.196 \times 20{,}000 \times d^3$$

Hence, for a carbon steel shaft with square ends

$$d = \frac{\sqrt[3]{T}}{6.12}.$$

Similarly, for a carbon steel shaft with fluted or hexagonal ends

$$d = \frac{\sqrt[3]{T}}{6.53};$$

for a nickel steel shaft with square ends

$$d = \frac{\sqrt[3]{T}}{6.94};$$

for a nickel steel shaft with fluted or hexagonal ends

$$d = \frac{\sqrt[3]{T}}{7.5};$$

for a carbon steel shaft with upset ends

$$d = \frac{\sqrt[3]{T}}{6.8};$$

for a nickel steel shaft with upset ends

$$d = \frac{\sqrt[3]{T}}{7.8}.$$

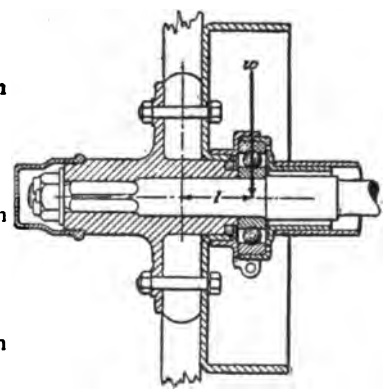

FIG. 134.—DIAGRAM OF BENDING MOMENT IN SEMI-FLOATING AXLE.

Shafts of Semi-Floating Axles.—In a semi-floating axle the shafts are subjected not only to torsional loads, but also to a bending moment. The length of the lever arm (Fig. 134) is equal to the distance between the centre plane of the road wheel and the centre line of the outboard axle bearing, and the load is equal to the weight supported by one of the rear wheels. The

load on the rear axle is not known when a car is designed, but can be determined approximately by means of the following formulæ:

Two passenger runabout

$$W = \frac{\textit{wheel base}^3}{10} + 200 \textit{ pounds.}$$

Five passenger open touring car

$$W = \frac{\textit{wheel base}^3}{8} + 600 \textit{ pounds.}$$

Seven passenger open touring car

$$W = \frac{\textit{wheel base}^3}{9} + 800 \textit{ pounds.}$$

The maximum bending moment on the shaft occurs at the centre of the bearing and is equal to wl, where w is the load carried by one of the wheels, and l the distance between the centre plane of the wheel and the centre of the bearing. Let T equal the maximum torque on one of the axle shafts in pounds-feet; that is, one-half the product of the maximum engine torque by the low gear reduction ratio and the bevel gear reduction ratio. If the diameter of the shaft is d, the distance c of the outermost fibre from the neutral axis is $\frac{d}{2}$ and the moment of inertia I of the cross section is $\frac{\pi d^4}{64}$, hence inserting in the well known formula for bending stress

$$S_b = \frac{M c}{I},$$

we have

$$S_b = \frac{32\, wl}{\pi d^3}.$$

The polar moment of inertia of the circular section is $\frac{\pi d^4}{32}$, and inserting in the formula for torsional stress

$$S_t = \frac{M c}{J},$$

we get

$$S_t = \frac{192\, T}{\pi d^3}.$$

These two stresses can be combined by means of the equation given on page 172, as follows:

$$S_o = \frac{16\, wl}{\pi d^3} + \sqrt{\left(\frac{192\, T}{\pi d^3}\right)^2 + \frac{1}{4}\left(\frac{32\, wl}{\pi d^3}\right)^2}$$

$$= \frac{1}{d^3}\left[\frac{16\, wl}{\pi} + \sqrt{\left(\frac{192\, T}{\pi}\right)^2 + \frac{1}{4}\left(\frac{32\, wl}{\pi}\right)}\right]$$

Hence

$$d = \frac{\sqrt[3]{5.09\ wl + \sqrt{(61.14\ T)^2 + \frac{1}{4}(10.18\ w\ l)^2}}}{S} \quad \ldots\ldots\ldots (45)$$

This diameter is required at the bearing. The bending moment decreases uniformly from the centre of the bearing to the centre of the road wheel and the centre of the master gear hub, respectively, and if the lightest possible construction is desired the shaft diameter may be decreased from the value calculated by equation (45) at the bearing to the diameter required for the torsional stresses only at the centre of the road wheel and the master gear, respectively.

Helical Bevel Gears.—There are two types of bevel gears employed in rear axle drives, viz., the ordinary bevel gear whose tooth elements are straight lines, and the helical bevel gear whose tooth elements curve around the gear cone.

The helical-bevel gear type of final drive was introduced in 1913 by the Packard Motor Car Company, and this drive has since been widely adopted for pleasure cars. Helical bevel gears with gear axes at right angles bear the same relation to straight bevel gears as helical spur gears with parallel axes to straight spur gears. Their chief advantage is their noiseless operation at all speeds, but they have a number of other important advantages which together were responsible for their almost instant popularity. These advantages are more or less inter-related. For instance, with helical bevel gearing a smaller minimum number of teeth can be used than with straight bevel gearing. What limits the minimum number of pinion teeth in straight bevel gearing is the fact that as the number of teeth is decreased the non-uniformity of motion, and consequently the noise, increases. But helical bevel gearing is inherently far more silent, hence this limitation is practically eliminated and pinions with a smaller number of teeth may be used.

Cause of Non-Uniform Gear Motion.—Before proceeding with the helical bevel gear, it will be well to consider the cause of non-uniform motion and noise in straight bevel and spur gears, because it is the absence of this cause in the helical gear to which it owes its valuable properties. In a correctly cut pair of involute spur gears there is—assuming proper spacing of shafts and absolute rigidity of same—uniform transmission of motion as long as the arc of contact or arc of action is not less than the circular pitch. As the number of teeth decreases the

arc of contact approaches the circular pitch and with the 15 degree involute system 12 is the smallest number of teeth with which the arc of contact exceeds the circular pitch and with which uniform transmission of motion is theoretically obtainable.

The above applies to perfectly cut teeth while they are new. Spur gear teeth have a combined rolling and sliding motion and they are naturally subject to wear, the wear on any part of the tooth flank being substantially proportional to the relative sliding motion at that part of the flank and to the load supported by it. Now, unfortunately, the relative sliding motion, and, consequently the wear, varies greatly at different points of the tooth flank.

Referring to Fig. 135, in which two teeth of a pair of meshed gears are shown to be in contact at the pitch points—the points of intersection of the flanks with the pitch circles—the momentary direction of motion of the contacting points of both wheels is the same, tangential to the pitch circles at their point of contact. Hence, there is at this moment no sliding of one

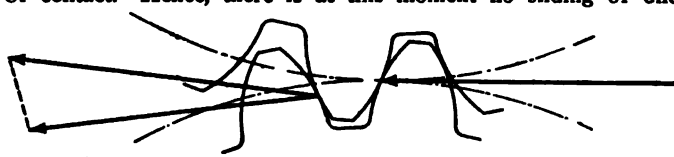

FIG. 135.—SHOWING DIRECTION AND MAGNITUDE OF MOTION OF TOOTH CONTACT SURFACES AT DIFFERENT POINTS OF MESH.

tooth over the other, the motion being purely rolling. Now consider the other pair of teeth shown in contact in the same figure. The motion of each point is in the direction of a tangent to a circle through this point concentric with the corresponding pitch circle. These lines diverge considerably, and it is obvious that when two surfaces in contact move in different directions they must slide over each other. In our example the sliding motion is represented by the dotted line connecting the ends of the arrows representing the motion of each point. Sliding in spur gears has been investigated by O. Lasche, and Fig. 136 represents his wear characteristic showing the distribution of wear over the tooth flank. There is no sliding at the pitch line, and wear increases from the pitch line both toward the top and the root of the tooth. This effect can often be plainly seen on an old straight spur or bevel gear on which there is a line on the tooth flank at pitch height which does not show any wear while all the rest of the flank is polished.

When a tooth flank is thus unevenly worn, the condition of uniform motion—that a normal to the contact surfaces must always pass through the pitch point—is no longer fulfilled. The result is that the gears transmit motion non-uniformly, the driven gear is alternately accelerated and allowed to decelerate, and, in consequence, the gear is noisy. True helical bevel gears are gears cut from blanks of frustrated conical form, the teeth of which curve around the gear axis in such a way that the elements of the tooth in the pitch cone surface always make the same angle with a pitch surface element. This angle is known as the angle of spiral. In practice the elements of the teeth form circular arcs of given radius and the gear approximates the true helical bevel form.

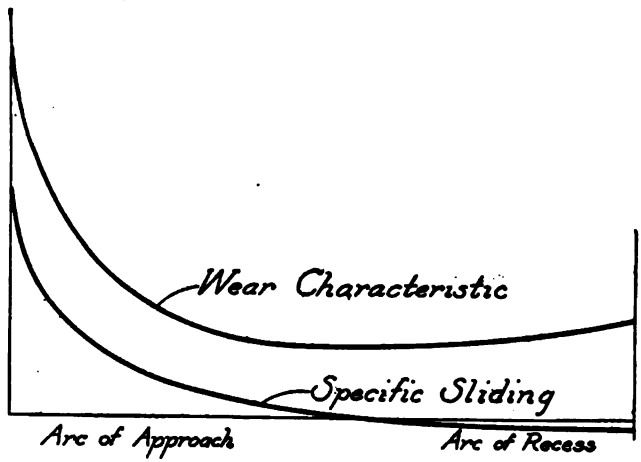

FIG. 136.—WEAR CHARACTERISTIC OF GEAR TOOTH.

Helical bevel gears may be either right hand or left hand, according to the direction in which the teeth wind around the gear. Only gears of unlike denomination will mesh together, that is, a right hand pinion with a left hand gear, or a left hand pinion with a right hand gear. The question of whether to use right hand or left hand pinions is of much importance, as the denomination of the pinion determines the direction and magnitude of the end thrust, which is much greater with helical bevel than with ordinary bevel gears.

Angle of Spiral.—In laying out a pair of helical bevel gears one of the factors to decide on is the angle of spiral. This

should be such that the angular advance corresponding to the face length of the gear is somewhat greater than the circular pitch. If this relation holds, then there is at all times pitch line contact at some part of the teeth and this obviates any tendency of the gear teeth to wear away more quickly on some part of their flanks than on others; for, as soon as any part of the flank wore ever so little more than the pitch line, the pressure at that part would be reduced and the wear thereby automatically cut down. This is the principle which insures that tooth contact in a helical bevel gear does not deteriorate with age and that such a gear remains quiet throughout its life.

Minimum Number of Teeth.—High speed motors, especially those of moderately powered cars, require a high gear reduction and the helical bevel gear has made it possible to obtain this higher reduction in a single step without running the risk of non-uniform and noisy tooth action.

Helical bevel drives with pinions of ten teeth are entirely practical and these permit of obtaining any gear ratio that may be needed for pleasure cars. In the case of such small numbers of teeth the pinion must be made integral with its shaft. As regards strength it is believed that a helical bevel pinion of a given pitch diameter and cut with teeth of a certain diametral pitch will safely transmit the same power at a certain speed as a straight bevel pinion with the same pitch diameter and diametral pitch; this notwithstanding the fact that the normal load on the teeth is considerably greater than with the straight bevel gear. If the power transmitted is the same the tangential force will be the same in the two cases. On the other hand the end thrust is much greater with the helical than the straight pinion and the normal tooth load usually figures out about 15 per cent higher in the case of the former. Probably the chief reason for the greater strength of the helical pinion is that since there is always pitch line contact there can be no non-uniform motion to cause heavy extra strains. There is, however, another reason for the greater strength of a helical bevel pinion, and that is that it has more teeth in contact at one time. If the spiral advance corresponding to the width of face is greater than the circular pitch, then the arc of action includes always at least one more tooth, than in a similar straight bevel set. The two outer teeth will be in contact over only a part of their length, but as far as breakage is concerned practically their whole strength counts.

In practice the angle of spiral is usually 30 degrees or close to it, as with the pitches and proportions of face width to centre distance this gives a spiral advance somewhat greater than the circular pitch.

Since the circular pitch

$$p_c = \frac{\pi}{p_d}$$

and the spiral advance

$$s = f \sin \phi$$

where p_d is the diametral pitch; f, the face width and ϕ, the angle of spiral, we have in the case of a 50 tooth 5 diametral pitch gear with 30 degree angle of spiral and 1½-inch face,

$$p_d = \frac{3.146}{5} = 0.628 \textit{ inch}$$

$$s = 1.5 \times 0.5 = 0.75 \textit{ inch}$$

which gives an overlap of about 20 per cent. For unusually small pitches or relatively large face widths smaller angles of spiral will give the necessary overlap of teeth, and with the reverse conditions a greater angle of spiral must be used, but makers of gear cutting machinery advise against an angle larger than 35 degrees.

Calculation of Blanks.—The calculation of the blanks for the pinions and gears partakes of the methods used for calculating the blanks for straight bevel gears and helical spur gears respectively. Thus, for instance, the pitch diameter is calculated by the same equation as used in the case of helical spur gears, viz.,

$$d_p = \frac{N}{p_n \times \cos a}$$

where N is the number of teeth; p_n, the normal diametral pitch and a the angle which the tooth flank element makes with the pitch cone element (angle of spiral). With regard to the addendum there is no complete agreement. In spur gears the addendum is made equal to 0.3183 $p_c = 1/p_d$, and the dedendum, 0.3683 $p^c = 1.157/p_d$, the latter being the sum of a working depth of 0.3183 p_c below the pitch circle and a clearance of 0.05 $p_c = 0.157/p^d$. Therefore, the total working depth of 0.6866 $p_c = 2/p_d$ extends equally above and below the pitch circle. Now it is known that in a pinion with a small number of teeth there is a tendency to undercutting and consequent weakening of the pinion teeth. To obviate this it is customary in helical bevel pinions to have most of the working depth

above the pitch circle. One maker of helical bevel gear cutting machines recommends that on the pinion 0.7 of the working depth be above the pitch circle and 0.3 below the pitch circle. In the gear the proportion must be reversed, that is, 0.3 of the working depth must be above the pitch circle and 0.7 below the pitch circle.

Let it be required to lay off the blanks for a helical bevel gear and pinion of 48 and 12 teeth respectively, 5 pitch, 30 degree angle of spiral with 0.7 of the working depth above and 0.3 below the pitch circle in the pinion. We have in the first place for the maximum pitch diameters

$$\frac{12}{5 \times 0.866} = 2.771 \textit{ inches}$$

and

$$\frac{48}{5 \times 0.866} = 11.085 \textit{ inches.}$$

The total working depth of the 5 pitch teeth is

$$\frac{2}{5} = 0.4 \textit{ inch}$$

hence, in the pinion the working depth above the pitch circle or the addendum is

$$0.7 \times 0.4 = 0.28 \textit{ inch}$$

and the working depth below the pitch circle

$$0.3 \times 0.4 = 0.12 \textit{ inch.}$$

The clearance is

$$\frac{0.157}{5} = 0.0314 \textit{ inch.}$$

The pitch angle of the pinion is such that

$$\text{tangent pitch angle} = \frac{2.771}{11.085} = 0.25$$

$$\text{pitch angle} = 14 \textit{ degrees.}$$

The face angle of the pinion is greater than the pitch angle by an angle such that its tangent is

$$\frac{0.28}{\sqrt{1.385^2 + 5.543^2}} = 0.0487$$

and the angle is 2° 47′.

Hence, the face angle is 16° 47′.

The face diameter of the pinion is

$$2.771 + (2 \times 0.28 \times \cos 14°) = 3.314.$$

The pitch angle of the gear is the complement of the pitch angle of the pinion or

$$90° - 14° = 76°$$

and the angle which the addendum adds to the pitch angle is such that its tangent is

$$\frac{0.12}{\sqrt{1.385^2 + 5.543^2}} = 0.0208$$

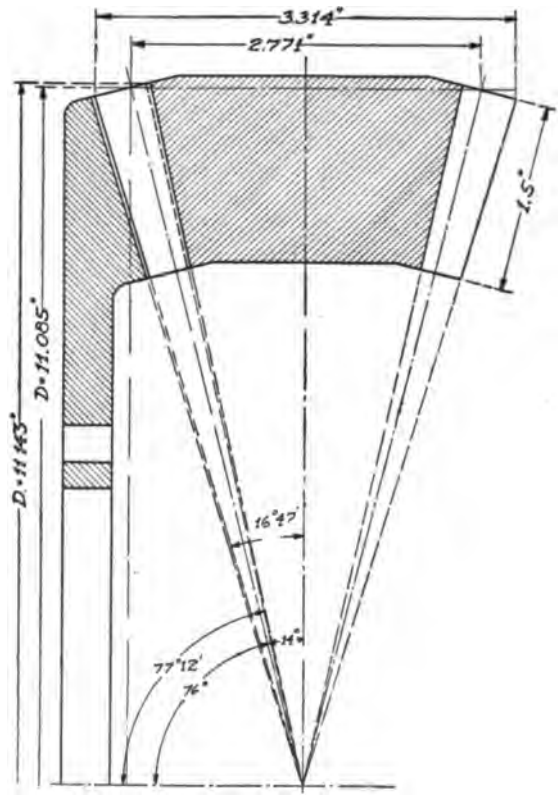

FIG. 137.—LAY-OUT OF A PAIR OF HELICAL BEVEL GEARS.

and the angle is 1° 12',
hence, the face angle is

$$76° + 1° 12' = 77° 12'$$

Strength of Bevel Gears.—As was stated previously, a pair of helical bevel gears of given pitch diameters and pitch will transmit the same power as a pair of straight bevel gears of the same pitch diameters and pitch, and the following consideration applies to both kinds of gears. A modification of the Lewis formula has been worked out for bevel wheels, according to which the strength of a bevel pinion is equal to that of a spur pinion of the same face, pitch and number of teeth, multiplied by the ratio of the smallest to the largest pitch diameter. It is at once apparent that this formula is not a rational one, for if the pinion face extended nearly to the apex the formula would make the strength almost nil, which is far from being correct. It is therefore stipulated that the formula shall be applied only if the small pitch diameter is not less than two-thirds the big pitch diameter. But if this formula is applied to existing automobile bevel gears it is found to give such high values for the stress that it is at once seen to be incorrect. The trouble is mainly with the Lewis formula, which is based on wrong assumptions. Instead of the whole tangential force coming at the end of one tooth, the force is always divided between two or more teeth, and when the contact is at the end of one tooth it is not at the end of the other tooth or teeth. G. H. Marks, who made a series of tests on cut gears at Leland Stanford, Jr., University, which were reported in a paper read before the American Society of Mechanical Engineers in 1912, showed that the Lewis formula is partly based on erroneous premises and that the arc of action must be taken into account to get a tolerably accurate result if gears of all kinds are considered.

The bevel gear tooth, whether straight or helical, decreases in pitch uniformly from the outer end, where the pitch has the nominal value, to the apex of the gear cone. Let the face width be equal to $1 - a$ per cent of the distance from the outer end of the tooth to the apex, which distance we may designate by L. Now let us take any small section dx of the tooth at a distance x from the apex. The tangential pressure which this section will support we know to be proportional to the circular pitch and to the width of face dx. But the circular pitch at this part of the face width, if p is the nominal circular pitch, is

$$p_x = \frac{x}{L} p$$

Also, a tangential force F_x on the pitch circle at a distance x

from the apex is equivalent to a tangential force on the maximum pitch circle

$$dF = F_x \frac{x}{L}$$

Hence we may write for the tangential force which the section dx of the tooth will support (using the Lewis formula)

$$dF_x = S \times \frac{x}{L} p \times y \times dx = \frac{S\,p\,y}{L} x\,dx,$$

and this is equivalent to a tangential force on the pitch circle of the large end of

$$dF = \frac{S\,p\,y}{L} x^2\,dx \times \frac{x}{L} = \frac{S\,p\,y}{L^2} x^3\,dx$$

If we integrate this expression between the limits $x = L$ and $x = a\,L$ we get

$$F = \int_{a\,L}^{L} \frac{S\,p\,y}{L^3} x^3\,dx = \frac{S\,p\,y}{L^3}\left(\frac{L^4}{3} - \frac{a^4 L^4}{3}\right)$$

$$= \frac{S\,L\,p\,y}{3}\left(1 - a^4\right) \ldots\ldots\ldots\ldots\ldots (46)$$

in which F is the tangential force on the pitch circle at the large end; S, the permissible stress in pounds per square inch; p, the circular pitch at the large end; L, the pitch line length from the large end of the pinion; y, the Lewis constant for the particular number of teeth, and a, the proportion of the pitch line length from the inner end of the pinion to the apex, to the pitch line length from the outer end of the pinion to the apex of the cone. To be absolutely correct the equation should also contain a factor depending upon the number of teeth in contact at one time and a factor dependent upon the pitch line velocity. But both of these items vary only within relatively narrow limits in pleasure cars, and as there is some uncertainty as to their exact influence on the strength of the gears it is permissible to neglect them. Practical data in the author's possession shows that if a heat treated alloy steel, such as 3½ per cent nickel or its equivalent, is used, the value of the stress in the above equation may be 25,000. This stress has been arrived at by analyzing the gears of several rather high powered cars and is based on the direct torque of the engine, not the geared-up torque. It appears that in moderately powered cars in which the full engine power is used a

greater part of the time and where space restrictions are not so severe, the gears are made somewhat more liberal and a stress of 20,000 may be used. Also, if the material is not equivalent to 3½ per cent nickel steel, the stress should be chosen lower in proportion to the elastic limits. Using a somewhat lower stress, which leads to gears of larger dimensions, has the advantage, at least in the case of straight bevel gears, that, owing to the larger contact surfaces the tendency to noisy operation is reduced.

Direction of Thrust Loads.—When a car is being driven forward, the propeller shaft and bevel pinion turn right-handedly, while when the car is being backed the bevel pinion turns left-handedly. Therefore, a right-hand pinion tends to draw into the gear when the car is being driven forward, as a result of the curvature of the teeth. The other causes of end thrust, viz., the taper of the pinion cone and the pressure angle, tend to force the pinion out of the gear. Of these two forces the former is always the greater, and the net end thrust on the shaft of a right-hand pinion is in the direction toward the gear center and equal to the difference between the end thrust due to the curvature of the teeth on the one hand and that due to the pinion cone angle and the pressure angle on the other.

In backing, the end thrust due to the curvature of the teeth of a right-hand helical pinion is away from the gear center and in the same direction as the end thrust due to the cone angle and pressure angle. The resultant is, therefore, in the direction away from the gear center and equal to the sum of the end thrusts due to tooth curvature, cone angle and pressure angle, respectively. Evidently, therefore, with a right-hand pinion the end thrust is a maximum when the car is being backed.

With a left-hand pinion all end thrusts add together for forward drive and are in the direction away from the center of the gear, while for the reverse drive the end thrust, though still in the same direction, is equal in amount to the difference between that due to tooth curvature on the one hand and to the cone angle and pressure angle on the other. The maximum end thrusts are the same whether a right or left-hand pinion is used. As the car is being driven forward most of the time, the right-hand pinion seems to have the advantage, but some designers prefer the left-hand pinion because heavy thrust loads in the direction away from the gear center can be accommodated more readily than those in the opposite direction.

Center of Load Distribution.—In attempting to calculate the thrust loads we must first determine the center of load distribution on a pinion tooth. We will assume that the load is distributed along the tooth in proportion to the strength of the tooth section, which is an ideal condition. In actual practice the adjustment of the gears will, of course, have much to do with the load distribution. Let n be the ratio of the tooth face to the pitch line length from the large end of the tooth to the pitch cone apex, and let m be the proportion of the pitch line length represented by the distance from the apex to the center of the tooth load. From the well-known formula for strength of gears it is known that the strength of a tooth section is directly proportional to the circular pitch at that section, and the pitch, of course, decreases uniformly from the large end of the tooth to the apex, where it is zero. The strength of a section of the bevel gear is also proportional to the width of that section. In Fig. 138 the vertical lines *ab*, *cd* and *ef* repre-

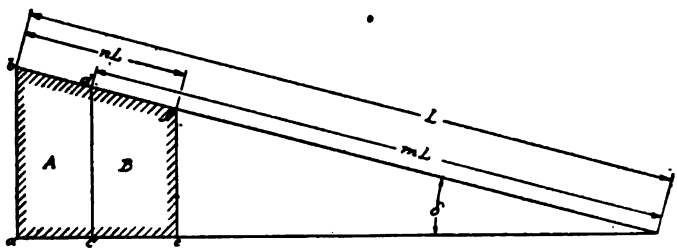

FIG. 138.—LOCATING CENTER OF DISTRIBUTION OF TOOTH LOAD.

sent the circular pitch at the respective points and the line *cd* is supposed to divide the entire gear into two parts of equal strength. As the strength of a gear is proportional to the product of its circular pitch into its width of face, the two areas A and B should be equal. If this is the case, then

$$\left[\frac{L\sin\delta + L(1-n)\sin\delta}{2}\right] nL\cos\delta = \left[\frac{L\sin\delta + mL\sin\delta}{2}\right](L-mL)\cos\delta \times 2$$

$$\frac{L+L(1-n)}{2} nL = (L+mL)(L-nL)$$

$$\frac{2L-nL}{2} nL = L^2 - m^2L^2$$

$$n L^2 - \frac{n^2 L^2}{2} = L^2 - m^2 L^2$$

$$n - \frac{n^2}{2} = 1 - m^2$$

$$m = \sqrt{1 + \frac{n^2}{2} - n}$$

Multiplying the pitch diameter by this value m we get the effective pitch diameter, and with the aid of this we get the tangential effort on the corresponding pitch circle by means of the equation

$$F = \frac{T \times 24}{d_p}$$

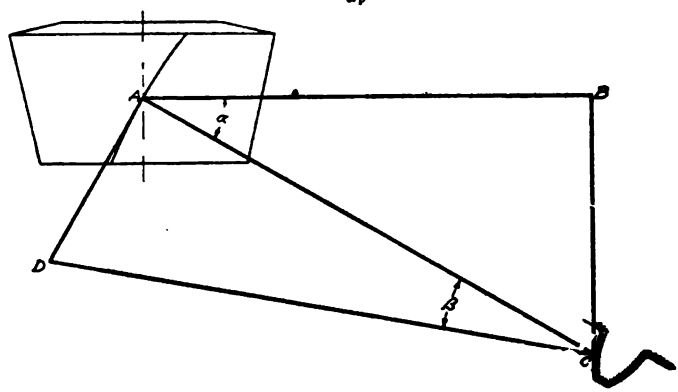

FIG. 139.—SHOWING RELATION BETWEEN TANGENTIAL FORCE AND NORMAL TOOTH PRESSURE.

The normal load on the tooth contact surface is, of course, considerably greater than the tangential force, owing to the inclination of the tooth elements against the pitch cone elements (angle of spiral) on the one hand, and to the inclination of the tooth flank (pressure angle) on the other. If we designate the angle of spiral by α and the pressure angle of the tooth by β, the normal pressure on the tooth is

$$P = \frac{F}{\cos \alpha \cos \beta}$$

as may be readily seen from Fig. 139 in which AB represents the tangential force on the pinion, AC the force in a plane

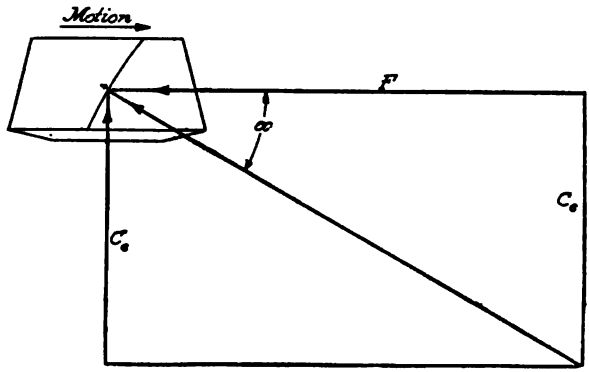

FIG. 140.—SHOWING RELATION BETWEEN TANGENTIAL FORCE AND PRESSURE ALONG PITCH CONE ELEMENT.

tangent to the pitch cone and perpendicular to the tooth element, and *CD* the force normal to the contact surfaces. While in determining the bearing loads of straight spur and bevel gears a friction angle of 5 degrees is generally figured with, this does not seem necessary in the case of helical gears, as there is always pitch line contact at some point, and, consequently, pure rolling motion at this point, with very little sliding motion on the whole. The problem now is to resolve the pressure *P* into a component parallel to the pinion axis (thrust load) and another component perpendicular to the pinion axis (radial load).

We first find the components of the tooth pressure along an element of the pitch cone and perpendicular to that element,

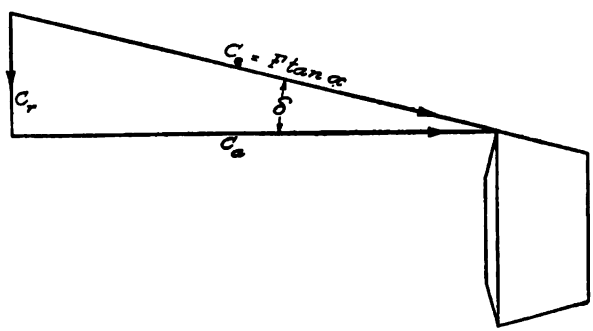

FIG. 141.—PRESSURE ALONG PITCH CONE ELEMENT RESOLVED INTO AXIAL AND RADIAL COMPONENTS.

respectively. In Fig. 140 is shown a plan view of a right-hand pinion supposed to rotate right-handedly. The horizontal arrow represents the tangential force F on the inclined tooth and the vertical arrow the resulting pressure along the pitch cone element. It will be seen that

$$\frac{C_a}{F} = \tan \alpha, \text{ hence } C_a = F \tan \alpha$$

This pressure along the pitch cone element can again be resolved into two components, as shown in Fig. 141, one parallel to the pinion axis and the other perpendicular thereto. It is here necessary to take account of the direction of the forces and we will call axial forces in the direction from the small to the

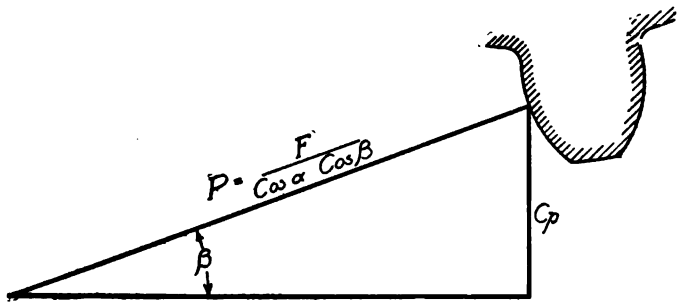

FIG. 142.—COMPONENTS OF NORMAL TOOTH PRESSURE PERPENDICULAR TO PITCH CONE ELEMENT.

large end of the pinion, or away from the apex of the cone, positive, and those in the opposite direction, negative. Radial forces from the point of contact toward the axis will be called positive and those oppositely directed, negative.

Resolving the force along the pitch cone element we get for the axial component

$$C_a = -F \tan \alpha \cos \delta$$

and for the radial component

$$C_r = F \tan \alpha \sin \delta.$$

We next take up the component of the normal tooth pressure perpendicular to the pitch cone element through the point of contact. From Fig. 142 it can be seen that this component C_p is equal to

$$P \sin \beta = \frac{F \sin \beta}{\cos \alpha \cos \beta} = F \frac{\tan \beta}{\cos \alpha}$$

This component perpendicular to the pitch cone element also may be further resolved into axial and radial components, as illustrated in Fig. 143, the axial component being

$$C_{aa} = F \frac{\tan \beta \sin \delta}{\cos \alpha}$$

and the radial component

$$C_{rr} = F \frac{\tan \beta \cos \delta}{\cos \alpha}$$

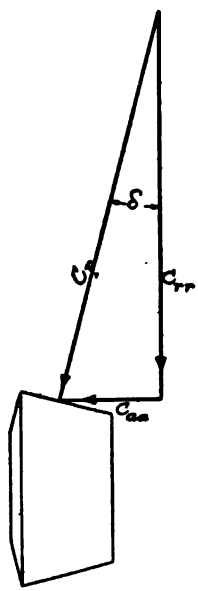

FIG. 143. — COMPONENT PERPENDICULAR TO PITCH CONE ELEMENT RESOLVED INTO AXIAL AND RADIAL COMPONENTS.

We now add like components of the forces along the pitch cone element and perpendicular to that element respectively and obtain for the end thrust on a right-hand helical pinion turning right-handedly (forward drive)

$$L_a = F \left(- \tan \alpha \cos \delta + \frac{\tan \beta \sin \delta}{\cos \alpha}\right)$$

and for the radial load on such a pinion

$$L_r = F \left(\tan \alpha \sin \delta + \frac{\tan \beta \cos \delta}{\cos \alpha}\right)$$

These same equations apply to the case of a left-hand pinion turning left-handedly (reverse motion). If a left-hand pinion turns right-handedly (forward motion), the component along the pitch cone element is in the direction away from the apex of the cone and the sign of its axial component becomes positive. The same applies to a right-hand pinion turning left-handedly. However, the radial component of the force acting along the pitch cone element is in this case directed from the axis through the point of contact and is, therefore, negative. We, therefore, have for the axial and radial forces on a left-hand helical pinion turning right-handedly (forward drive) or a right-hand helical pinion turning left-handedly (reverse drive).

$$L_a = F \left(\tan \alpha \cos \delta + \frac{\tan \beta \sin \delta}{\cos \alpha}\right)$$

and

$$L_r = F \left(- \tan \alpha \sin \delta + \frac{\tan \beta \cos \delta}{\cos \alpha}\right)$$

Axial and Radial Loads on Gear—Since action and reaction are equal and opposite, the axial load or end thrust on the gear is equal and opposite in direction to the radial load on the pinion, and the radial load on the gear is equal and opposite in direction to the axial load on the pinion. There is, therefore, no need of separately calculating the gear-bearing loads. We may summarize our equations as follows:

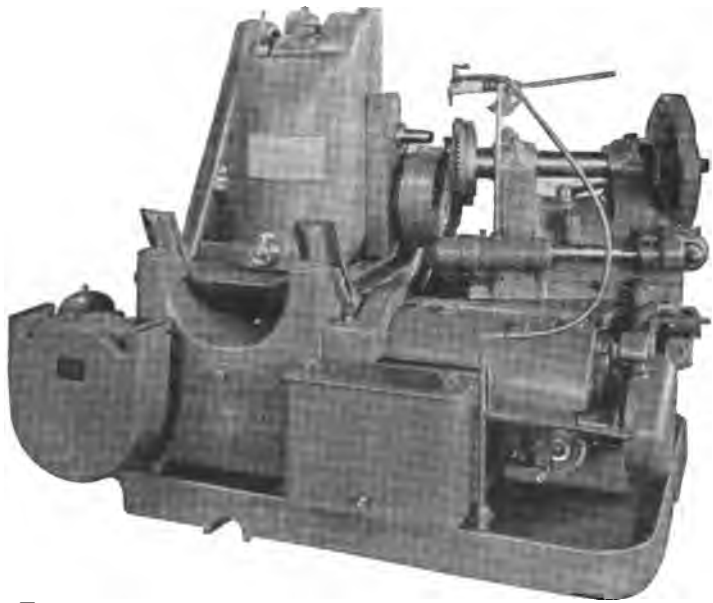

FIG. 144.—GLEASON AUTOMATIC HELICAL BEVEL GEAR GENERATING MACHINE.

Right-Hand Pinion Turning Right-Handedly.
Left-Hand Pinion Turning Left-Handedly.

End Thrust on Pinion—Radial Load on Gear.

$$L_1 = F\left(-\tan\alpha\cos\delta + \frac{\tan\beta\sin\delta}{\cos\alpha}\right)$$

Radial Load on Pinion, End Thrust on Gear.

$$L_2 = F\left(\tan\alpha\sin\delta + \frac{\tan\beta\cos\delta}{\cos\alpha}\right)$$

Right-Hand Pinion Turning Left-Handedly.
Left-Hand Pinion Turning Right-Handedly.

End Thrust on Pinion, Radial Load on Gear.

$$L_3 = F\left(\tan\alpha\cos\delta + \frac{\tan\beta\sin\delta}{\cos\alpha}\right)$$

Radial Load on Pinion, End Thrust on Gear.

$$L_4 = F\left(-\tan\alpha\sin\delta + \frac{\tan\beta\cos\delta}{\cos\alpha}\right)$$

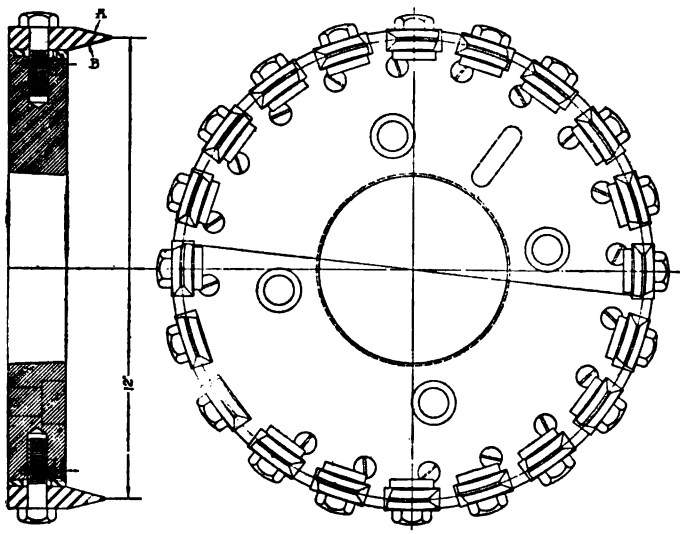

FIG. 145.—CUTTER FOR FINISHING HELICAL BEVEL GEARS.

in which

F is the tangential force at the mean effective pitch radius of the pinion; α, the angle of spiral; β, the pressure angle of the teeth; δ, the pinion pitch angle.

Manufacture of Helical Bevel Gears—By the Gleason method the teeth of a helical bevel gear or pinion are cut by means of a revolving cutter 12 inches in diameter with twenty inserted blades. Half of the blades (alternate ones) serve for finishing the inside flank of the teeth and the other half for finishing the outside flank. The machine works on the generating

principle, the tooth flank being generated by relative motion of the cutter holder and the work. One side of the tooth is finished at a time, and when all the teeth have been finished on one side the setting of the cutter and gear is changed before work is begun finishing the other side of the teeth. The cutter carriage is mounted on a vertical column which is supported on a cradle with circular ways. A reversing mechanism is employed to roll the cradle and rock the work. By means of compound change gears the proper relative motion of the cradle and work may be secured.

FIG. 146.—TYPICAL HELICAL BEVEL GEAR SET.

One advantage of the helical bevel gear over straight bevel gears is that with the former not nearly the same degree of adjustment is required in order to insure good tooth contact and noiseless operation.

Straight Bevel Gears—Straight bevel gears can be made with six pitch teeth for pleasure cars of the very smallest size, say those with engines up to 100 lbs.-ft. torque; five pitch for cars with engines of 100-200 lbs.-ft. torque, and four pitch for cars with engines of more than 200 lbs.-ft. torque. The pinions are

made with from eleven to eighteen teeth. In the largest cars the pitch diameter of the bevel gear is limited to about 12 inches, and in medium sized cars to 11 inches by reason of the required ground clearance. The capacity of straight bevel gears may be found by means of the same equation (46) as for helical bevel gears, and the thrust and radial bearing loads can be calculated by the methods explained in Chapter III.

In extremely powerful cars the gear dimensions have to be made somewhat smaller, and in low powered cars they can be made slightly more liberal as the lower unit pressures result in greater silence of operation and the wear, of course, is also reduced. In America straight bevel gears are now used only on the cheaper pleasure car and on light delivery wagons.

Axle Housings—There are two general types of rear axle housings, viz., built-up housings consisting of a central driving gear housing of cast metal and of tubes forced into or bolted to them, and integral pressed steel or drop forged housings. The latter are a comparatively recent development, and since they possess important advantages in the way of strength and minimum weight, they are rapidly coming into extensive use. We will first consider the older type, the built-up axle.

The central cast portion or driving gear housing, which is generally cast of either steel or malleable iron, and occasionally of aluminum, may be made in different ways, as shown in Fig. 147. It must be of such a form as to accommodate the differential and driving bevel gears, and it must be either split in halves or provided with an opening big enough to admit the driven bevel gear. Some designers give this housing such a form that its walls at every point lie close to some contained part, which necessarily leads to a more or less irregular outside shape, whereas others employ regular housings of bulbous, spherical or cylindrical shape. In order to secure the necessary strength with a minimum weight of material it is often necessary to rib the housing. The ribs may be placed either on the outside or on the inside, but internal ribbing has gained considerably in favor of late, as a smooth outside form is much easier to keep clean.

Formerly housings split substantially in halves, as shown at *A* and *B*, Fig. 147, were much used, and both are still met with. It is now, however, more common practice to make the greater part of the case in a single piece, with a segmental cover either on top, as at *C*, or at an angle, as at *D*, so the opening is most accessible from the rear of the car. As stated, these large open-

ings primarily serve the purpose of introducing the bevel gear and differential. In some designs of rear axle the differential is carried by a special plate bolted to the front of the driving gear housing, which latter has large openings both in front and rear.

Axle Tubes—Besides the driving gear housing the supporting structure of the built-up rear axle comprises a pair of so-called axle tubes. These are generally made from drawn material, but occasionally they are cast. In a semi-floating axle the tubes may be of uniform section from end to end, but in a full

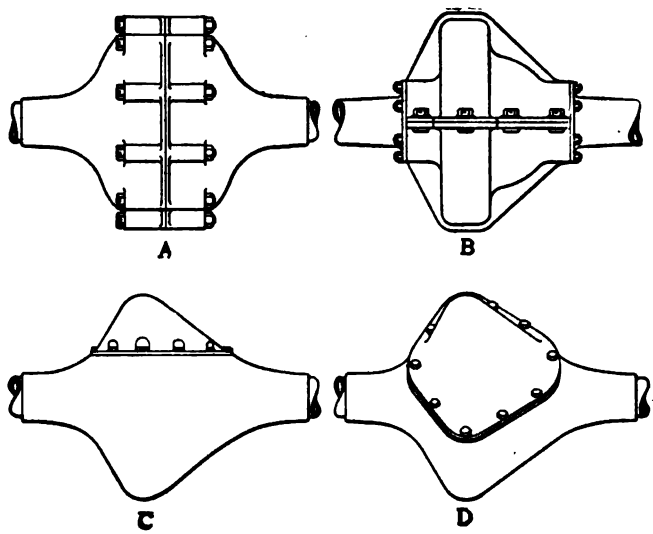

FIG. 147.—TYPES OF DRIVING GEAR HOUSINGS.

floating axle they are generally swaged down to a smaller diameter where they pass through the hubs, so that it is not necessary to use inordinately large bearings in the hubs. The inner portion of the tubes should preferably be of considerable diameter, as less weight of material is then required in order to produce a certain resistance to bending and torsional strains.

The tubes may be fitted to the driving gear housing in different ways. Ordinarily they are forced under pressure into integral hubs of the driving gear housing and are then riveted, as shown in Fig. 148 at *A*. This makes a very good job. They may also

be screwed into the hubs of the housing and riveted. Instead of being riveted the tubes may be secured by brazing, but this is open to the objection that in brazing there is some danger of accidentally overheating the metal and thus depriving it of a great deal of its strength. The hubs of the housing should preferably be beaded at their outer end. Some designers provide flanged sleeves which are brazed onto the tubes and are bolted to the driving gear housing. This makes it possible to

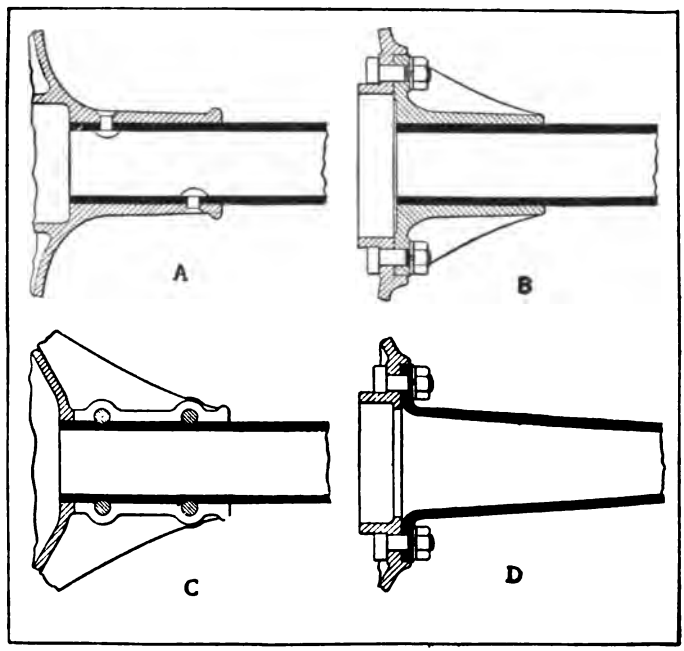

FIG. 148.—METHODS OF SECURING AXLE TUBES TO DRIVING GEAR HOUSING.

renew one of the tubes at any time without the necessity of bringing it to a well-equipped machine shop. This construction is illustrated in Fig. 148 at *B*. A very excellent though little used method consists in splitting the hub of the driving gear housing and clamping the tube by means of four bolts, the bolts passing slightly beneath the surface of the tube so as to lock it against endwise motion (*C*, Fig. 148). What is probably the

best method of making a built-up axle consists in the use of tapered and flanged swaged axle tubes which are bolted to the driving gear housing, as shown at *D*, Fig. 148.

In order to insure a rigid axle housing it is necessary to have a relatively long bearing for the axle tube in the hub of the driving gear housing. This bearing is generally made from two to two and a half times the outside diameter of the tube. With the best class of workmanship a somewhat smaller length of bearing is permissible. It is also advantageous, from the standpoint of rigidity, to make the driving gear housing of considerable width in the transverse direction of the vehicle, so the tubes need not be so long. In some constructions the entire portion of the axle housing between wheel hubs is made in two

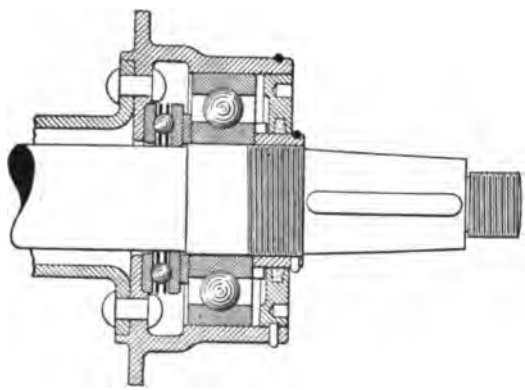

FIG. 149.—FLANGED OUTER END OF AXLE TUBE RIVETED TO COMBINED BRAKE SUPPORT AND BEARING HOUSING.

castings, and short tubes are inserted into these for the wheels to run upon. Constructions may be found ranging all the way from this extreme to that in which the tubes extend close up to the differential bearings.

In a plain live or semi-floating axle a bearing housing has to be provided at the outer end of the axle tube. While it is possible to expand the tube itself for this purpose, this construction is rarely seen. The bearing housing is usually made in a separate piece which is forced into or over the end of the axle tube and secured by riveting or brazing. In one construction, illustrated in Fig. 149, the axle tube is flanged at the outer end and riveted to a casting which forms the brake carrier and bearing housing.

Stresses on Axle Tubes—In discussing the stresses on the housing of a driving axle we have to consider three distinct cases, viz.:

(1) When the car is being started;
(2) When the car is being driven;
(3) When the car is being braked.

The first two cases are similar in that the kinds of stresses produced are the same, only, since the clutch will transmit a

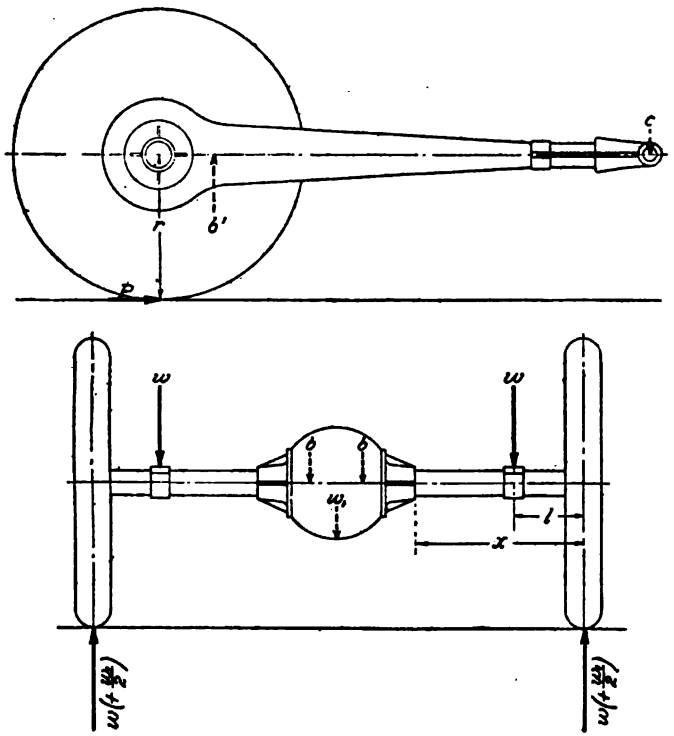

FIG. 150.—LOADS ON HOUSING CORRESPONDING TO FORWARD DRIVING.

greater torque than the motor is capable of developing, if the former should be allowed to grip suddenly, the flywheel inertia would cause a greater torque to be impressed on the rear axle than would ever occur in regular driving. Just how much greater it would be it is impossible to determine. When the car

is being started or driven forward the loads and reactions on the axle structure are as shown in Fig. 150. There is a downward pressure w on each of the two spring saddles. Then there is the weight w_1 of the axle itself, which may be considered concentrated at the centre. Then there are also the loads b b on the differential bearings, the load b' on the pinion bearing and the reaction c at the point of support of the torque arm on the frame. Finally there is the reaction P of the road surface on the driving wheel causing the forward motion of the car.

It can easily be shown that the bearing loads b b are equal to b', hence the pressures on the inner bearings create no stress in the axle tubes. Also, the moments of forces b' and c around the rear axle axis are equal and opposite, and therefore have no effect on the axle tubes. There remain only the vertical bending moments due to the weights w w on the spring seats, the vertical bending moment due to the weight w_1 of the axle, and the horizontal bending moment due to the propelling thrust P.

When the brakes are applied we have the same moments in the vertical plane due to the weight resting on the spring seats and the weight of the axle. The horizontal moment is in the opposite direction and is proportional to the maximum braking force instead of to the maximum propelling force, which former is at least equal to the latter. In addition we have in this case a torsion moment on the tubes, since the brake supports are secured to the outer ends of the axle tubes, and when the brakes are applied the friction between brake band and drum tends to carry the brake supports around with the drums. This tendency is counteracted by the torque tube or rod which is generally fixed to the axle housing near its middle.

It will thus be seen that when braking, the axle tubes are subjected to the same bending stresses as when driving, and, besides, they are subjected to torsion. Hence the combined stress is greatest when the brakes are applied, and only this case needs to be considered. Owing to the fact that the weight of the axle is not known in advance, and since it is small in comparison with the weight on the springs, it is advisable to neglect this factor.

In respect to the vertical load, the axle housing forms a beam freely supported at both ends and loaded at the centre and two intermediate points, the equivalent point of support being at the centre of the road wheel in the case of a full floating axle and at the centre of the outboard bearing in the cases of semi-floating and plain live axles. The bending moment increases from noth-

ing at the point of support to the maximum at the centre of the spring seats and is constant between spring seats. (See Fig. 151.)

In respect to the horizontal bending moment, each half of the axle may be considered as a cantilever, the middle of the axle being the fixed end of the lever and the load being applied to the outer, free end. The variation of all of the moments is shown in the three-plane diagram, Fig. 151.

Now, let us take any section of the tube inside the spring seat at a distance x from the centre plane of the road wheel. The

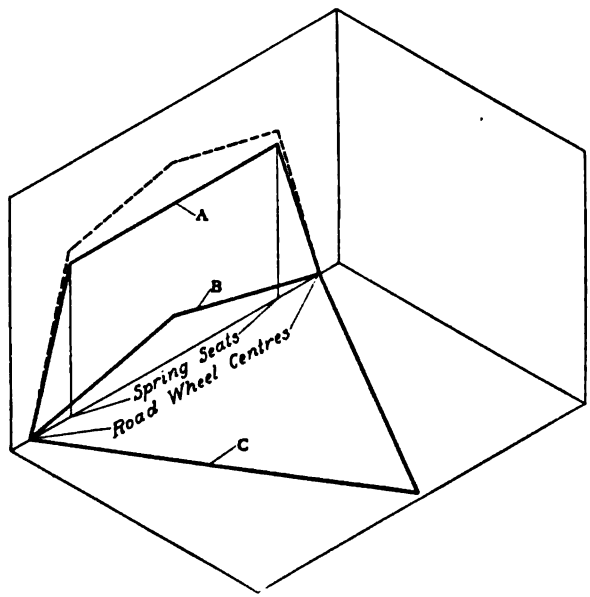

FIG. 151.—BENDING MOMENTS ON AXLE TUBE.

A, Bending Moment Due to Weight on Springs; B, Bending Moment Due to Axle Weight; C, Bending Moment Due to Retarding Force of Rear wheels.

moment at this section due to the weight on the spring seat is wl, and the moment due to the retarding force of the brakes is $P\ x$. The maximum retarding force P is reached when the wheels are locked on dry macadam surface, under which condition the coefficient of friction with rubber tired wheels is about 0.6. Hence, $P = 0.6\ w$ and $P\ x = 0.6\ w\ x$. These two bending moments are in planes at right angles to each other and their

resultant (Fig. 152) is equal to the square root of the sum of their squares. That is,

$$M_b = \sqrt{w^2 l^2 + 0.6^2 w^2 x^2}$$
$$= w\sqrt{l^2 + 0.36 x^2}.$$

Denoting the radius of the road wheel by r, the torsional moment on the axle tube is

$$M_t = Pr = 0.6\, w\, r.$$

The unit bending stress is

$$S_b = \frac{M_b c}{I},$$

and the unit torsional stress,

$$S_t = \frac{M_t c}{J}.$$

The combined stress is

$$S_c = \frac{M_b c}{2I} + \sqrt{\left(\frac{M_t c}{J}\right)^2 + \frac{1}{4}\left(\frac{M_b c}{I}\right)^2}$$

Remembering that for a circle $J = 2I$, we may write this in the form

$$S_c = \frac{c}{2I}\left(M_b + \sqrt{M_t^2 + M_b^2}\right) \quad \ldots\ldots\ldots\ldots\ldots\ldots\ldots\ldots\ldots\ldots (46)$$

Now let D denote the outside diameter of the axle tube and d the inside diameter. Then

$$c = \frac{D}{2}$$

and

$$I = \frac{\pi(D^4 - d^4)}{64}.$$

Inserting these values and those of M_t and M_b found above, in equation (46) we get

$$S_c = \frac{\frac{D}{2}}{\frac{2\pi(D^4 - d^4)}{64}}\left(w\sqrt{l^2 + 0.36x^2} + w\sqrt{0.36r^2 + l^2 + 0.36x^2}\right)$$

$$= \frac{5Dw}{D^4 - d^4}\left(\sqrt{l^2 + 0.36x^2} + \sqrt{l^2 + 0.36x^2 + 0.36r^2}\right) \quad \ldots\ldots (47)$$

Denoting the part in parentheses by y we may write

$$(D^4 - d^4)S_c = 5\,D\,w\,y$$
$$D^4 S_c - 5\,D\,w\,y = d^4 S_c$$
$$d^4 = D^4 - \frac{5\,D\,w\,y}{S_c}$$

$$d=\sqrt[4]{D^4-\frac{5\,D\,w\,y}{S_c}},$$

and replacing the value of y—

$$d=\sqrt[4]{D^4-\frac{5\,D\,w\left(\sqrt{\quad}+0.36x^2+\sqrt{l^2+0.36x^2+0.36r^2}\right)}{S_c}} \quad (48)$$

The great majority of rear axles are provided with trusses. No matter how strongly a rear axle housing is constructed, unless it is provided with an under running truss it will sag slightly in the middle. This causes the rear wheels to spread at the bottom, which makes for an unsightly appearance and poor working conditions of the bearings. By means of the under running truss the axle tubes can be practically entirely relieved of vertical bending stresses. In that case only two stresses are to be considered, viz., the torsional stress and the horizontal bending stress.

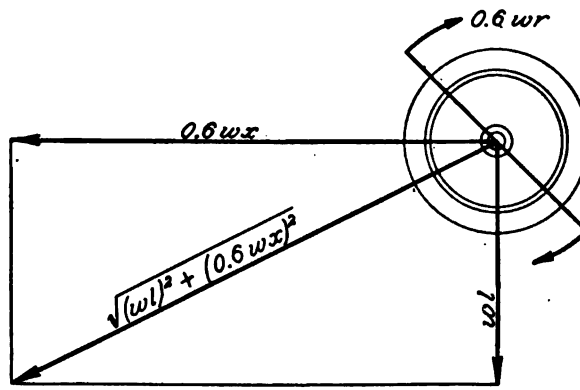

FIG. 152.—COMPOSITION OF BENDING MOMENTS AND COUPLE ON AXLE TUBE.

The value of the latter is 0.6 w x. Substituting the values for this case in equation (46) we have

$$S_c=\frac{16\,D}{\pi\,(D^4-d^4)}\left(0.6\,w\,x+\sqrt{(0.6\,w\,r)^2+(0.6\,w\,x)^2}\right)=$$

$$\frac{3\,D\,w}{D^4-d^4}\left(x+\sqrt{r^2+x^2}\right) \quad (49)$$

By the same processes as used in the preceding case we then find that

$$d=\sqrt[4]{D^4-\frac{3\,D\,w\,(x+\sqrt{r^2+x^2})}{S_c}} \quad (50)$$

The stress S_s may be chosen at 15,000 lbs. per square inch for carbon steel tubing, and 20,000 lbs. per square inch for nickel steel tubing. In determining the diameters of the tube, the outside diameter is usually chosen about twice the diameter of the axle shaft, and the required inside diameter may then be calculated by equation (48) or (50). Steel tubing has been standardized by the Society of Automobile Engineers and the standard sizes should be selected. (See Appendix.)

To illustrate the use of the equations we will calculate the necessary diameters of axle tubes for a car carrying 2,000 pounds on the rear axle, having wheels 32 inches in diameter and in which the distance x from the centre plane of the rear wheel to the point where the axle tube enters the hub of the driving gear housing is 18 inches. The weight on the rear axle corresponds to that in the average five passenger touring car, loaded, and we may assume that it is medium-powered and has rear axle driving shafts 1¼ inches in diameter. Hence the outside diameter of the axle tubes might be made 2½ inches. We then have

$$D = 2\tfrac{1}{2} \text{ inches},$$
$$r = 16 \text{ inches},$$
$$x = 18 \text{ inches},$$
$$w = 1{,}000 \text{ lbs}.$$

Assuming that the tubes are to be of carbon steel, we put $S_n = 15{,}000$. Inserting values in equation (50) we have

$$d = \sqrt[4]{2.5^4 - \frac{3 \times 2.5 \times 1{,}000\,(18 + \sqrt{16^2 + 18^2})}{15{,}000}} = 2.06 \textit{ inches}$$

This is the minimum section for any point between the brake support and the driving gear housing. Beyond the brake support the axle tube is subjected to bending stresses only. Since the truss rod is generally anchored to the brake support, the vertical bending moment comes on this part of the tube whether the axle is provided with a truss rod or not. The inside diameter of the tube at this point would generally be made about ⅛ inch larger than the diameter of the axle shaft and the outside diameter calculated to give a unit stress of 15,000 or 20,000 pounds per square inch under the combined bending moments. The outside diameter of the tube would then be made such as to correspond with the bore of the next largest size of bearing. However, if the axle tube is continued through the wheel hub with the same thickness of wall as it has between the spring seat and the driving gear housing, the outer portion of the tube will be amply strong.

Pressed Steel Housing—Pressed steel presents the same advantages for rear axles as it does for other parts subjected to varying loads and to shock. It gives the maximum strength for

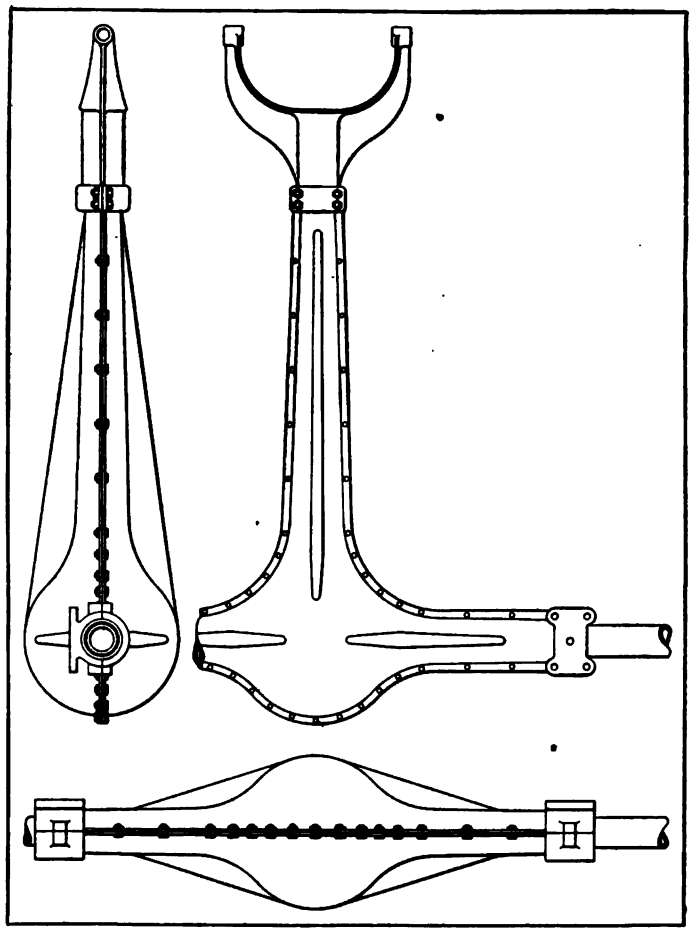

FIG. 153.—FIAT PRESSED STEEL AXLE.

a given weight, and when a sufficient number of parts are needed to make the pro rata cost of the dies small, pressed steel parts are usually lower in cost than equivalent parts made by other processes.

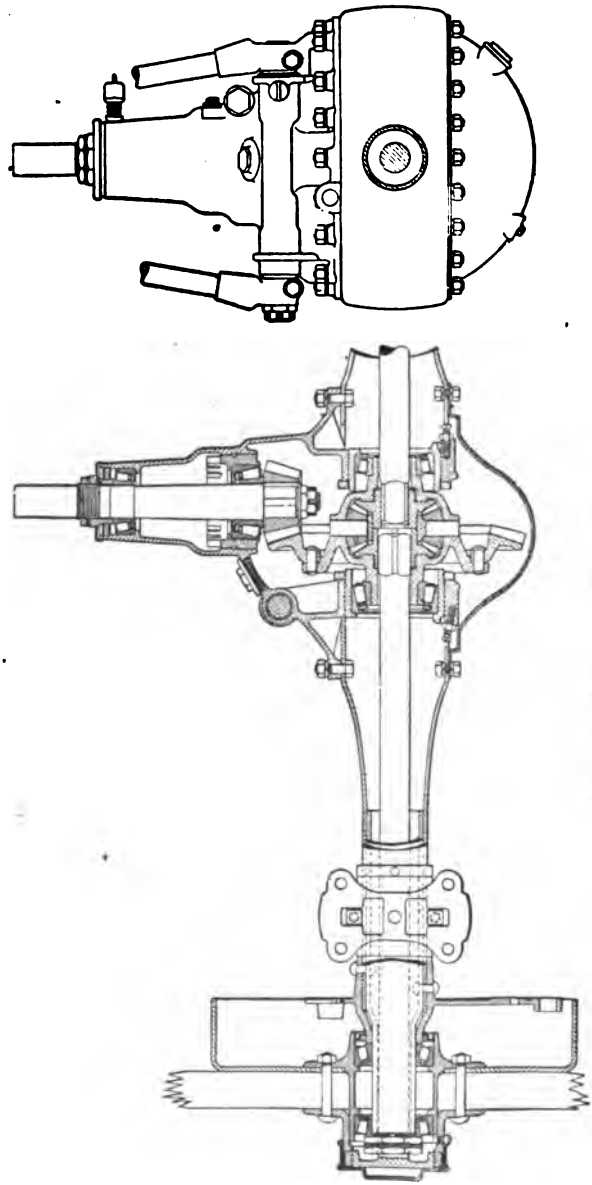

FIG. 154.—TIMKEN PRESSED STEEL AXLE.

One of the earliest automobile concerns to bring out a pressed steel rear axle was the Fiat Automobile Company, of Turin, Italy, whose axle is illustrated in Fig. 153. In this design the entire rear axle and propeller shaft housing are made in two identical pressed steel parts which are bolted together. The housing is heavily ribbed and is used without a truss rod. A large drop forged fork surrounds the forward end of the propeller shaft housing and is hinged to a cross member of the frame. The differential and driving shaft bearings are carried by a frame riveted into the enlarged portion at the middle of the pressed steel housing.

Another type of pressed steel axle is represented by the Timken shown in Fig. 154. In this case the housing has two large openings, in the front and rear respectively. It is pressed from sheet steel, in halves which are welded together by the oxy-acetylene process. In the axle illustrated the joint is in the horizontal plane, while in another it is in the vertical plane and the welded joint forms a strengthening rib.

A third type of pressed steel axle which is used on several makes of American low priced cars made in very large numbers is illustrated in Fig. 155. The axle housing is made in halves which are joined in a vertical plane at the centre of the driving gear. Each half is again made of two parts, viz., the central casing which is made by the swaging process, and a plain tube which is joined to the latter by the oxy-acetylene welding process.

For cars of small size and in which the springs are supported on the axle close to the road wheels, so that the bending moment is small, pressed steel axle housings can be made of ⅛ inch stock. For touring cars of moderate size the axle housings are made of 3/16 inch stock, the diameter of the housing increasing with the weight of the car from 2½ inch for a 2,000 lbs. car to 3 inch for 4,000 lbs. car. The material used in these housings is a low carbon steel having an elastic limit of about 34,000 lbs. per square inch. In a full floating axle the maximum stress comes at the point where the spring seats are attached, and in order to avoid the necessity of using comparatively heavy material for the whole housing, alloy steel reinforcing tubes are forced into the housing at this point and are supported near the centre of the axle.

Gear Carrier—With the type shown in Fig. 154 it is common to carry all of the bearings for the differential gear and driving pinion on a structure known as the gear carrier or differential carrier, which is bolted to the pressed steel housing. In some designs this carrier forms the closure for the front opening

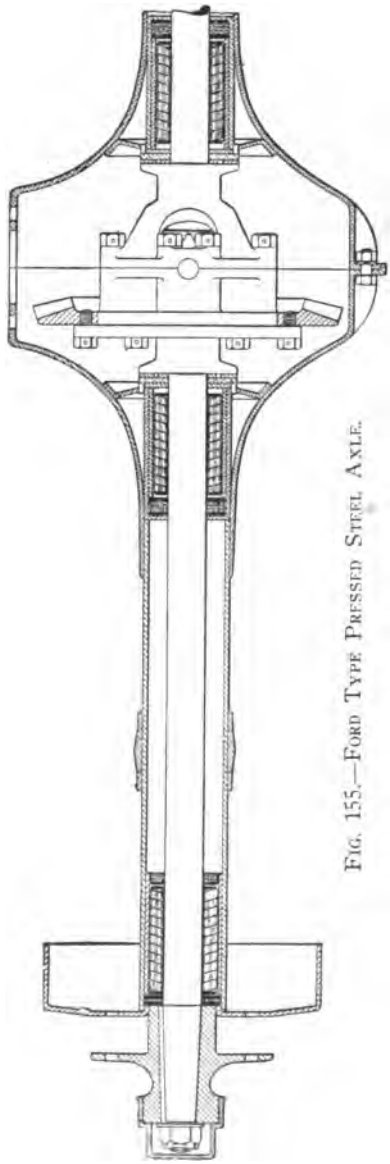

FIG. 155.—FORD TYPE PRESSED STEEL AXLE.

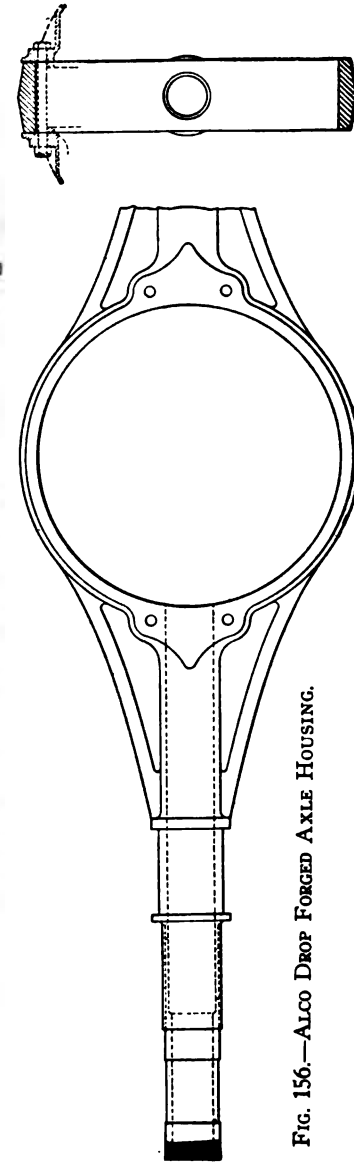

FIG. 156.—ALCO DROP FORGED AXLE HOUSING.

in the pressed steel housing and has the torque tube or rod secured to it, while in other cases it is inserted through the rear opening and bolted to the rear flange of the housing, but does not serve as a cover for this opening. The use of a differential carrier has the advantage that all of the bearings for the driving gear are carried in a single integral part and cannot be thrown out of alignment by the stresses on the axle housing. Moreover, the bearings can be adjusted before the axle is assembled.

Drop Forged Axles—Drop forged axles present substantially the same advantages as pressed steel axles. They do not require any welding to be done upon them, and, besides, they permit of variations in the thickness of the walls at different points and of integral flanges for the spring seats, etc. The advantage over the

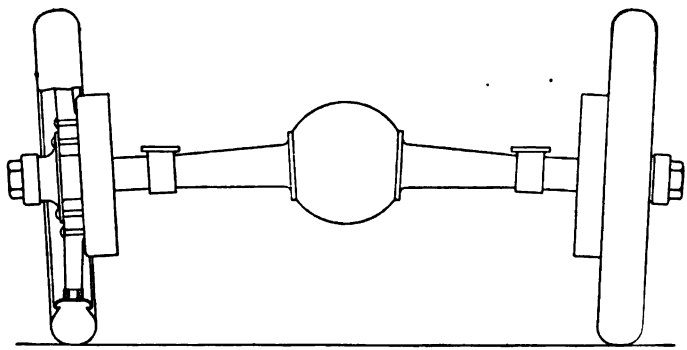

FIG. 157.—DIAGRAM OF ARCHED AXLE AND DISHED WHEELS.

pressed steel axle that no welding is required is offset, however, by the fact that the tubular portions must be bored out. One design of drop forged housing is shown in Fig. 156. The central portion of this particular housing is in the form of a ring, and a gear carrier and a large rear cover plate are used. Ten bolts pass through the flange of the gear carrier and that of the cover plate, but only four of these pass through holes in the drop forged housing. The housing is heavily ribbed between the annular and tubular portions and no truss rod is used.

Arched Rear Axles—Dished wood wheels present considerable advantage over plain wheels in the way of strength, and on horse vehicles these wheels are used exclusively. But in order to run properly, dished wheels must be mounted on a cambered axle

whose "set" is equal to the angle of dish of the wheel, so that the lowermost spoke, which carries the load on the wheel, stands in a vertical position. (See Fig. 157.) It is customary to give a slight "set" to the front wheel spindles, and when the side chain drive was common the rear axle spindles also were often given a set of a few degrees, the flexibility of the chain making this possible. With the ordinary design of shaft driven rear axle, however, it is impossible to incline the rear axle spindles, and if it is desired to employ dished road wheels it is necessary to re-

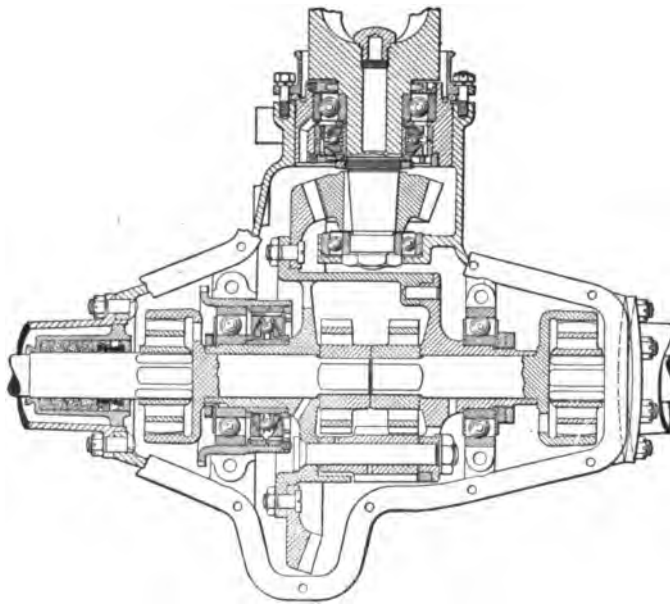

FIG. 158.—CENTRAL PORTION OF PEERLESS ARCHED AXLE.

sort to special constructions. One plan consists in dividing each rear axle shaft into two parts and connecting these parts by some form of universal joint. This construction is exemplified in the Peerless rear axle shown in Fig. 158. The axle tubes are set into the driving gear housing at an angle equal to the desired angle of set, and an internal and spur gear type of universal joint is used.

In another design the differential gear is mounted upon an extension of the propeller shaft, as shown in Fig. 159. Each master gear is provided with a long sleeve which carries a bevel

pinion at its outer end. The two pinions mesh, respectively, with bevel gears secured to the rear axle driving shaft. In order that there may be no interference between the two sets of bevel gears, the two pinions are made of different pitch diameters, and the two gears the same, but of course the ratio between the number of teeth in the pinion and gear is the same for both sets. This construction has the advantage that the differential gear is driven at a relatively high rate of speed and therefore can be made smaller. The differential is operated in a somewhat unusual manner in that power is applied to the pinion spider through the

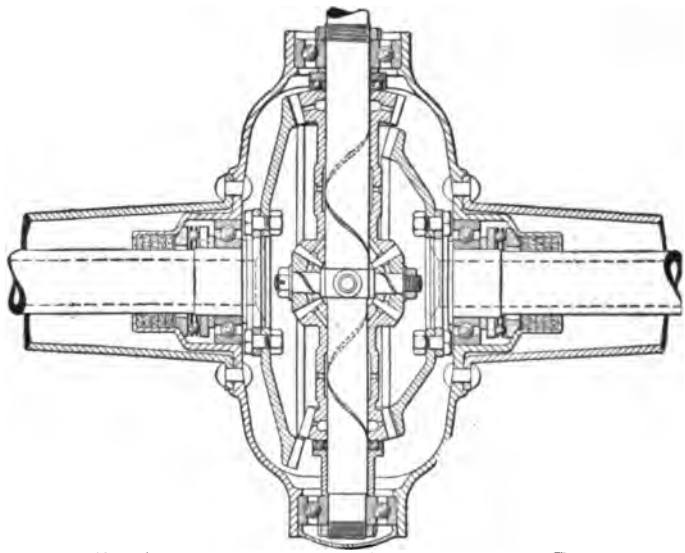

FIG. 159.—ARCHED AXLE WITH DIFFERENTIAL ON PROPELLER SHAFT.

central shaft instead of through the differential housing or frame, as ordinarily. This type of rear axle is used by the Daimler Motor Company in Germany and by the La Buire Automobile Company in France. It is, of course, obvious that with this construction the axle tubes may be inclined at any angle desired.

Types of Bearings—Anti-friction bearings are used almost exclusively on live rear axles, and all of the different types are well represented in this part of the car. In addition to the radial load resulting from the weight of the frame and body carried on the axle, and from the reaction of the bevel gears, there are

thrust loads due to driving on one side of a strongly crowned road or to skidding and to the reaction of the bevel gears. All these thrust loads must be provided for in some way. Owing to the fact that the thrust load in skidding may assume very considerable values and that radial ball bearings should not be subjected to thrust loads of more than 10 per cent of their radial load capacity, a great many rear axles are fitted with some form of combined radial and thrust bearing. When bearings are used which do not take any thrust load whatever, as, for instance, cylindrical roller bearings, it is absolutely necessary to provide special thrust bearings. It is not customary to provide thrust bearings inside the rear wheel hubs when radial ball bearings are fitted. These bearings are generally of considerable size, and are depended upon to carry the thrust load as well. In some designs of axles the thrust load is transmitted from the wheels through the axle shafts to the thrust bearings at the side of the differential gear. In the latter case it is necessary that the axle shaft be securely fastened to the master gear of the differential as well as to the road wheel hub.

Bearing Pressures—Taking up first the bearings for the bevel pinion shaft, there are two general arrangements. The most common of these consists in mounting the shaft in two bearings, both back of the pinion, one as close to it as possible and the other a considerable distance away. The other method consists in placing one bearing on either side of the pinion. The total bearing load is much smaller when the pinion is mounted between bearings, and this arrangement, no doubt, would be used much more extensively if it were not so difficult to find sufficient room for the inner bearing. As it is, some bearing makers rather oppose the latter arrangement on the ground that too small bearings are generally used on the inner side of the pinion, and much trouble is experienced in consequence. Owing to the fact that the spur type differential gear has no projecting hubs on its circumference, this type is preferable where a bearing is to be placed on the inner side of the pinion. If the bevel type of differential is used it is customary to place it on the back side of the bevel gear, if an inner bearing is to be fitted on the pinion shaft.

A modification of the first design described is that in which the forward end of the propeller shaft tube rides on the propeller shaft through the intermediary of a ball bearing. In this case there is only a single bearing at the bevel pinion, and the load on the bearing is less than it would be if there were another

bearing close to it. However, while the bearing load is reduced the stress in the propeller shaft is increased.

Besides the radial load the pinion shaft is subjected to thrust loads. There is, first, the end thrust, due to the tooth reaction of the bevel gears. With straight bevel gears this is always in the forward direction and is comparatively slight. Besides this, there is a thrust load due to the friction at the sliding joint in the propeller shaft. This changes in direction with the direction of slippage at the joint and varies in value according to the mean radius from the axis of rotation of the

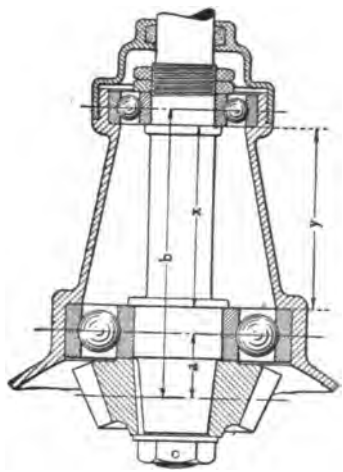

FIG. 160.—PINION SHAFT MOUNTING WITHOUT THRUST BEARING.

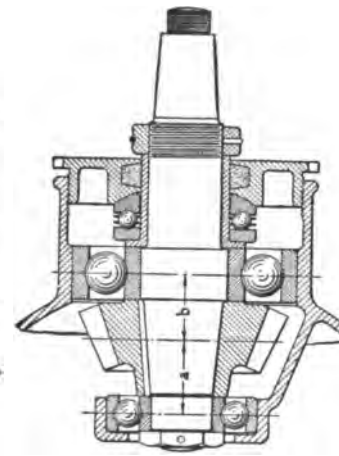

FIG. 161.—PINION SHAFT MOUNTING WITH SINGLE THRUST BEARING.

surfaces on which the slippage takes place, and according to the state of their lubrication. This load is greatest when a squared or fluted shaft type of slip joint is employed, and smallest with the block and trunnion type of joint. When the sliding takes place in one direction the thrust load due to this cause adds to that due to the tooth reaction, whereas if it takes place in the opposite direction, the two end thrusts are opposed and the resultant may possibly be directed backward.

The bevel pinion end thrust in the case of straight bevel gears varies considerably with changes in the gear reduction ratio. With large gear reduction ratios and block and trunnion type slip joints it is quite possible to take up the end thrust on the radial ball bearings, which, as already pointed out, have a thrust

load capacity of 10 per cent. of their radial load capacity. A design in which end thrust in both directions is taken up on radial bearings is shown in Fig. 160. In this construction it is essential that the measurements x and y be exactly alike, as otherwise the bearings will be cramped when the inner races are drawn tight on the shaft. Both outer races are close up against a shoulder at one end, but are free at the other end.

In the design shown in Fig. 161, end thrust in the forward direction is provided for by a special ball thrust bearing. This construction is suitable where the bevel gear gives a small re-

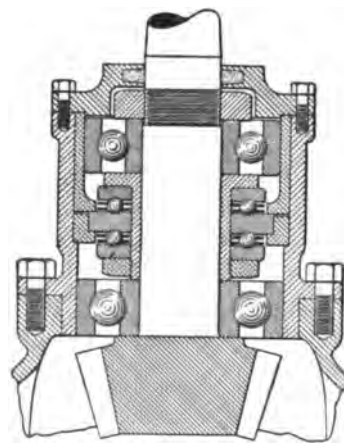

FIG. 162.—PINION SHAFT MOUNTING WITH DOUBLE THRUST BEARINGS.

duction and the slip joint is of the block and trunnion type, so that there is little chance of the end thrust ever changing in direction. These designs can be used with straight gears only.

The most highly developed design provides double thrust bearings on the pinion shaft, as shown in Fig. 162. In this design a central thrust plate is clamped between collars, which in turn are clamped between a shoulder in the bearing housing and the end plate. This thrust plate forms part of the double thrust bearing, which is assembled on a sleeve mounted on the pinion shaft. This sleeve also serves as a spacer for the radial ball bearings, the inner races of both of which are securely clamped to the shaft, while the outer races are free to move endwise. With this construction the pinion is held positively endwise, thus insuring continued accuracy of mesh, and the radial bearings are re-

lieved of all thrust loads, and consequently operate at their highest efficiency.

It will be seen that the construction Fig. 162, which takes account of all possible bearing loads, is somewhat complicated and for this reason many designers prefer combined radial and thrust bearings for the pinion shaft, such as conical roller bearings, cup and cone ball bearings, etc. Fig. 163 illustrates a pinion shaft mounted in two conical roller bearings. The outer rings of the roller bearings lie close up to internal flanges on the

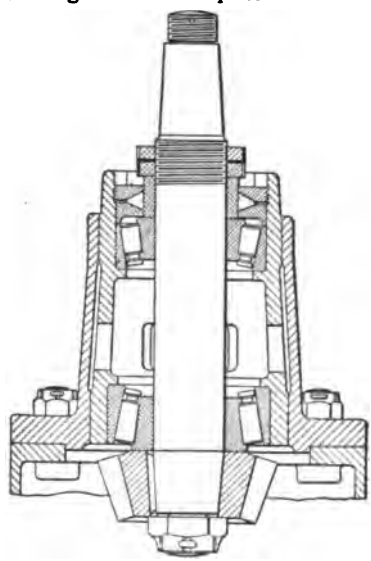

FIG. 163.—PINION SHAFT MOUNTED IN CONICAL ROLLER BEARINGS.

bearing housing at their inner ends, and both of the bearings can be adjusted by means of a single nut and check nut at the outer end, which are very accessible. This design also provides means for adjusting the mesh of the gears, consisting of an inner and an outer housing, the inner housing being screwed into the outer one and locked in position when the gears have once been properly adjusted. This type of bearing is very popular in connection with helical bevel gear drives.

The Hyatt type of flexible roller bearing is also used to some extent on pinion shafts. A typical mounting of these bearings is shown in Fig. 164. The outer sleeve of the bearing is pressed into the bearing housing and held from rotating by means of a

set screw. The inner sleeve is forced over the pinion shaft, and its forward end presses against a thrust plate, forming one member of a ball thrust bearing, the other plate of which bears against an adjusting nut screwed into the bearing housing. This design is intended for cars with only a single universal joint in the propeller shaft, and the forward end of the shaft is to be carried in another roller bearing, designated a "steadying bearing."

Calculation of Pinion Shaft Bearings—In determining the proper sizes of bearings for the pinion shaft we first calculate the torque on the shaft corresponding to full engine power and direct drive, then calculate the tooth pressure on the pinion, based upon the mean pitch diameter of the latter, resolve this tooth

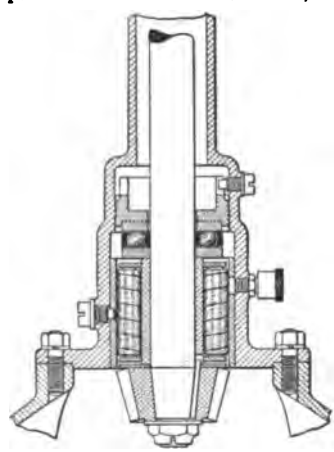

FIG. 164.—PINION SHAFT MOUNTED IN HYATT ROLLER BEARINGS.

pressure into a radial and a thrust load, and finally divide the radial load between the two bearings supporting the pinion shaft. The method of calculation may be illustrated by means of a practical example of a straight bevel gear drive.

We will take the case of an engine developing a maximum normal speed torque of 108 pounds-feet (four cylinder, 4x5 inch). Suppose that the bevel pinion has 16 teeth of five pitch and the gear 54 teeth, thus giving a reduction of 3.5 to 1. According to equation (44) the proper width of face for the pinion would be

$$\frac{133}{54 \times 3.2 \times 0.63} = 1.205 - \textit{say } 1\tfrac{1}{4} \textit{ inches.}$$

The largest pitch diameter of the gear is 10.8 inches, and that of the pinion 3.2 inches. Hence the distance from the point of inter-

section of the two largest pitch diameters to the point of intersection of the axes of the pinion and gear, respectively, is

$$\sqrt{5.4^2 + 1.6^2} = 5.63 \textit{ inches.}$$

The middle of the length of the tooth is at a distance

$$5.63 - 0.625 = 5 \textit{ inches}$$

from the point of intersection of the shaft axes, hence the mean pitch diameter of the pinion is

$$3.2 \times \frac{5}{5.63} = 2.84 \textit{ inches}$$

and the mean pitch radius is 1.42 inches. The tangential pressure on the bevel pinion then is

$$\frac{108 \times 12}{1.42} = 912 \textit{ pounds.}$$

The radial component of this pressure can be found by means of equation (27) after the angle of the bevel pinion pitch line with the axis of the pinion has been found. The tangent of this angle is

$$\frac{3.2}{10.8} = 0.30$$

and the angle is found to be equal to 16° 42′. Inserting values in equation (27),

$$P_r = \sqrt{912^2 + (912 \times 0.364 \times 0.958)^2} = 970 \textit{ pounds.}$$

If both bearings are back of the pinion, as in Fig. 148, the distance a will be about 1⅛ inches and the distance b 5⅛ inches. Hence the load on the bearing close to the pinion is

$$970 \times \frac{5\frac{1}{8}}{4} = 1{,}243 \textit{ pounds,}$$

and the load on the bearing farthest from the pinion,

$$1{,}243 - 970 = 273 \textit{ pounds.}$$

These are the maximum loads on the bearings when the car is being driven through the direct drive. When it is driven on any of the other gears the maximum loads on the bearings will be equal to the product of the above loads by the reduction ratio of the particular gear. For instance, if the low gear reduction ratio of the change gear be 3.2, then the maximum load on the bearing directly back of the pinion would be

$$3.2 \times 1{,}243 = 3{,}977 \textit{ pounds}$$

and that on the other bearing

$$3.2 \times 273 = 873 \textit{ pounds.}$$

In selecting the size of bearing it must be borne in mind that the rated capacity of the bearing is very conservative, and that, on the other hand, it is a very rare occurrence that the motor

operates under full power on the low gear. In view of this fact the bearing can be so chosen that the maximum load under low gear is about 100 per cent. above the rated capacity of the bearing, or that the rated capacity is about 50 per cent. higher than the maximum load on the bearing on the direct drive. For the most highly loaded bearings the heavy series of ball bearings is usually selected. In the present case the No. 407 would probably be chosen, which has a rated capacity of 1,900 pounds. The forward bearing is comparatively lightly loaded, but it must have a bore somewhat larger than the required propeller shaft diameter. For this place a bearing of the medium series would be the most advantageous, and the No. 307, which has a rated load capacity of 1,100 pounds, would probably be chosen.

Now, consider the case where the bearings are placed on opposite sides of the pinion, as in Fig. 161. The distance *a* here measures about $1\frac{5}{16}$ inches, and the distance *b* $1\frac{3}{16}$ inches. Hence the load on the inner bearing would be

$$\frac{1\frac{3}{16}}{1\frac{5}{16}+1\frac{3}{16}} \times 970 = 461 \textit{ pounds}$$

and that on the outer bearing

$$970 - 461 = 509 \textit{ pounds.}$$

It will be seen that in this case the bearing loads are much smaller than in the preceding case. The space available for the inside bearing is rather limited, yet a somewhat higher factor of safety is attainable in this case than in the previous one. A No. 404 bearing, having a rated capacity of 1,050 pounds, could be used on the inner end of the pinion, and a No. 307, having a rated capacity of 1,100 pounds, on the other end. The rated capacities, therefore, are about 100 per cent. higher than the maximum bearing loads on the direct drive. If the outside diameter of the bearing is limited and the load to be carried is large, bearings of the so-called heavy series should always be selected. In Fig. 161, in order to throw as much of the bearing load as possible on the bearing back of the pinion, the pinion is provided with a projecting hub, and the bearing on the inside is located at some distance from the pinion proper. This, of course, can only be done where the differential gear is entirely back of the bevel gear. The housing for the inside bearing in this design is made cup-shaped, so as to permit of the largest possible size of bearing without sacrificing strength in the supporting housing.

Differential Bearings—It is not necessary to consider the plain live axle mathematically, as that type is practically obsolete In nearly all modern axles the inner axle bearings are mounted

on the hubs of the differential housing, and with the full floating type of axle at least the loads on these differential bearings are due solely to the bevel tooth reaction. The normal pressure on the teeth of the gear is the same as the normal pressure on the teeth of the pinion, and the tangential pressures on gear and pinion are also the same. Hence—continuing our example—the tangential force on the gear is 912 pounds. The pitch line angle of the gear is such that its tangent is

$$\frac{10.8}{3.2} = 3.38$$

and the angle is found to be equal to 70° 30′. Inserting values in equation (27) for this case we have

$$P_r = \sqrt{912^2 + (912 \times 0.364 \times 0.284)^2} = 917 \textit{ pounds.}$$

The thrust load is found by inserting values in equation (26) as follows:

$$912 \times 0.364 \times 0.959 = 318 \textit{ pounds.}$$

The radial load is divided between the two differential bearings in the inverse proportion of their distances from the centre plane of the bevel gear. Owing to the fact that these bearings must have a relatively large bore in comparison with the load they have to carry, bearings of the medium series are usually chosen if radial ball bearings are to be used. The most heavily loaded of these bearings usually has a rated load capacity 50 to 100 per cent. greater than the maximum load coming on it when the car is driven on the direct drive. In many cases the bevel gear is much closer to one bearing than to the other, and the load on one bearing therefore is much greater than that on the other. However, notwithstanding this fact, bearings of the same size are frequently chosen, for the sake of symmetry and minimum number of different parts. In any case, the bore of one bearing could hardly be made smaller, and all that could be done would be to choose a bearing of the light series.

End Adjustment—With the highest class of workmanship it is unnecessary to provide means for longitudinal adjustment of the bearings. However, since measurements have to be taken from the pitch lines of the gears, which involves considerable difficulty, some provision is usually made to allow of adjusting the mesh of the gears. The simplest means consists in placing a washer back of the thrust bearing and another washer on the opposite side of the differential housing, between the end of its hub and a shoulder on the inside of the driving gear housing, and changing the thickness of these washers until the gears mesh properly. Quite a number of designers, however, provide screw

adjustment of the bearings. Such a means of adjustment is illustrated in Fig. 165. The radial bearing is mounted in a bushing which is carried in the bearing support forming part of the driving gear housing. One end of this bushing is made somewhat larger in diameter than the other end, and is threaded on the outside, the threaded portion screwing into corresponding internal threads on the bearing support. The outer end of the bearing bushing has an internal flange against which the outer plate of the thrust bearing rests, and by screwing the bearing bushing farther into or out of the support the thrust bearing can be moved back and forth in the direction of its axis. A lock nut is provided for locking the bearing bushing when the adjustment has been made. It may be pointed out that when a pair of bevel gears has once been properly adjusted there should never be occasion for readjusting it, since wear of the teeth cannot be compensated for by adjustment.

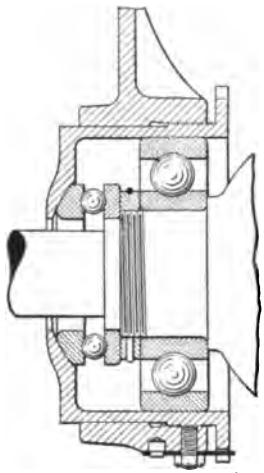

FIG. 165.—SCREW ADJUSTMENT OF BEVEL GEAR.

The problem of endwise adjustment is very readily solved with conical roller or cup and cone bearings. As shown in Fig. 166, all that is necessary is to lodge the outer race or ring of the bearing in a suitable recess in the driving gear housing and mount the inner race or ring on the end of the differential gear housing hub, making the inner portion of this hub of somewhat larger diameter and threading it, and passing a nut over this threaded portion. This is done at both ends of the differential gear, and by means of the two nuts the differential can be moved in either direction at will. The nuts may be split and provided with a clamp screw, or they may be provided with any other suitable locking device.

Wheel Bearings—The wheel bearings support the loads carried by the wheels and also take the load due to the propelling and braking efforts. We found that the limiting value of the braking effort is 0.6 times the weight resting on the wheel, and the limiting value of the driving effort the same. Since driving and braking efforts act at right angles to the weight, the resultant

of the two simultaneous loads is equal to the square root of the sum of the squares, viz.:

$$\sqrt{w^2+(0.6w)^2}=1.17w.$$

However, this is an entirely different load from that on the differential bearings, for instance. The actual load, owing to the unevenness of the road surface, changes from instant to instant, and at times greatly exceeds the so-called "dead" load. The maximum load to which the bearings are ever subjected depends upon the weight carried, the size of the wheels, the width of the tires and the state of their inflation, the flexibility of the springs, the nature of the road surface, the speed of the car, etc. The only factor that can be taken account of in selecting the bearings is the load carried by each wheel. The bearings should have a rated load capacity from 50 to 100 per cent. higher than the maximum load they will have to carry, provided the rated capacity represents ability to carry uniform loads.

In the case of semi-floating and three-quarter floating axles, the entire load on each wheel is carried on a single bearing, whereas

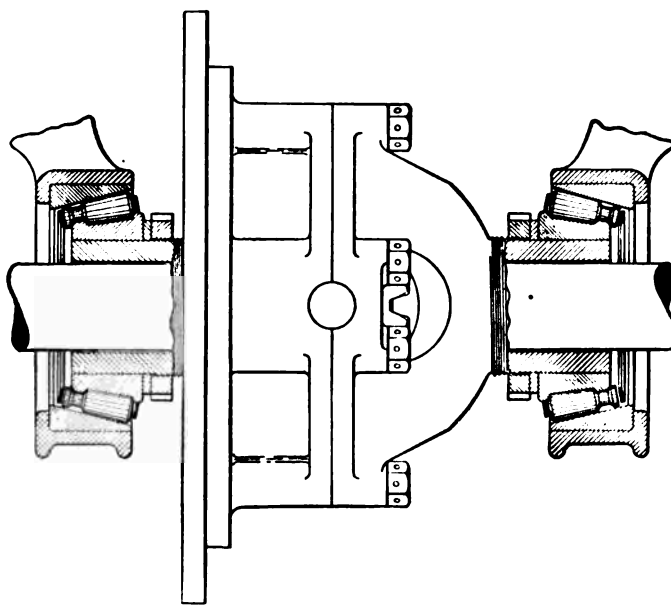

FIG. 166.—ENDWISE ADJUSTMENT OF DIFFERENTIAL MOUNTED IN ROLLER BEARINGS.

in the case of full floating axles it is carried on two bearings. When two bearings are used the ideal arrangement in some respects would be to place them symmetrically on opposite sides of the centre plane of the wheel, in which case both would carry an equal load, and both could be made of the same size. However, since the brake and brake support must be very close to the spokes of the wheel, the inner bearing generally has to be placed rather close to the centre plane of the wheel. In fact, in many designs the arrangement is such that the inner bearing supports nearly the whole load, and the outer bearing serves only as a "steadying" bearing.

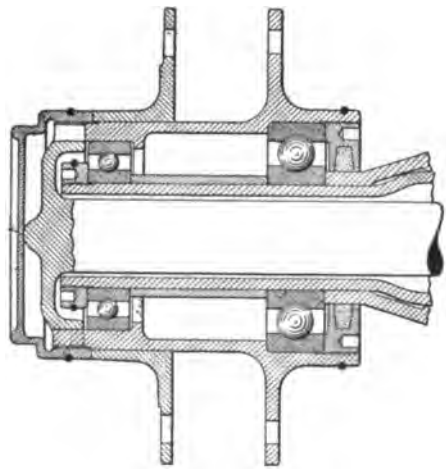

FIG. 167.—DRIVING WHEEL HUB MOUNTED ON TWO RADIAL BALL BEARINGS.

The driving effort is always parallel to the planes of the rear wheels, and any thrust load on the rear wheel bearings, is the result of sideward inclination of the road surface, centrifugal force or impact due to skidding. For this reason it is not essential to provide thrust bearings in the hubs, even when radial ball bearings are used.

Mounting of Wheel Bearings—When two radial ball bearings are used in the wheel hubs of a full floating axle, the inner races of both are securely clamped to the axle tube, a projection of the brake support hub or a collar forced over the axle tube against the shoulder thereof serving as a stop; a tubular spacer is inserted between the two inner races, and a nut is screwed

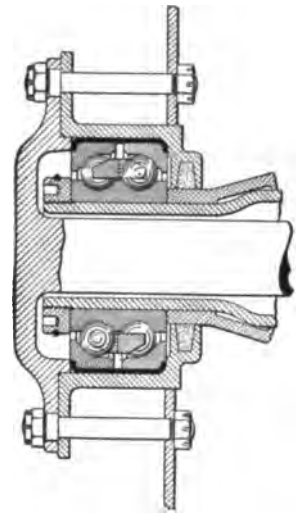

FIG. 168.—DRIVING WHEEL HUB ON SINGLE BALL BEARING. (THREE-QUARTER FLOATING.)

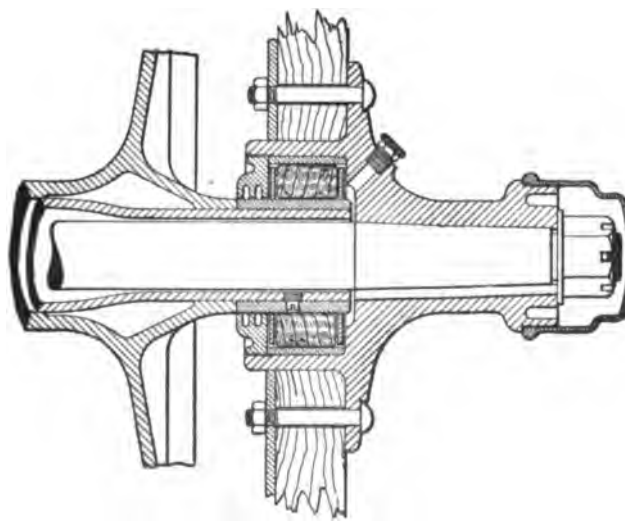

FIG. 169.—DRIVING WHEEL HUB ON HYATT ROLLER BEARING. (THREE-QUARTER FLOATING.)

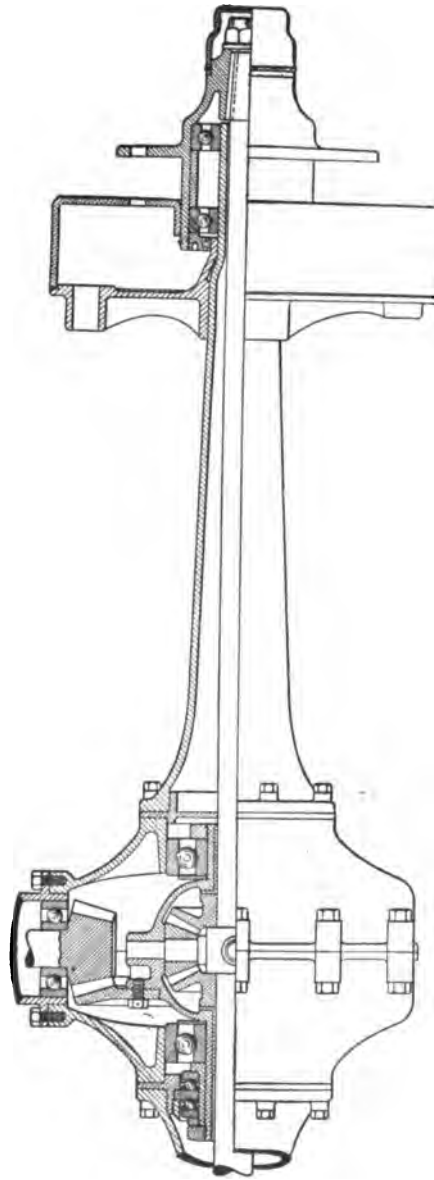

FIG. 170.—WHEEL THRUST TAKEN UP AT MIDDLE OF AXLE.

(This drawing illustrates a common British practice, of placing inserts between the central housing and the tubes, which serve as mountings for thrust bearings, packings, etc.)

over the end of the tube, as shown in Fig. 167. The outer race of only the inner, larger bearing is clamped tight in the hub, so this bearing will take the end thrust in both directions.

In the so-called three-quarter floating type of axle only a single bearing is used inside the wheel hub, as shown in Fig. 168. This bearing must be located in the centre plane of the wheel, and both of its races must be secured against endwise motion, so it will take both radial and thrust loads. The driving dog in this design of axle is either welded to the axle shaft or else rigidly secured to it, and is also firmly secured to the wheel hub. The single hub bearing may be either a radial ball bearing, a combined radial and thrust ball bearing (Two-in-One), as shown in Fig. 168, or a cylindrical roller bearing, as shown in Fig. 169. The latter bearing, of course, does not take any end thrust, and in this design provisions are made for transmitting the end thrust through the axle shafts to the thrust bearings at the sides of the differential housing.

A similar arrangement was suggested by F. G. Barrett in his paper on Ball Bearings, read before the Institution of Automobile Engineers. Mr. Barrett's suggested design is shown in Fig. 170. A double ball thrust bearing is mounted to one side of the differential gear. The outer races of the two radial bearings in the wheel hub are clamped tight, but the inner races are made a free fit on the axle tube so these bearings will not take any end thrust. The end thrust is transmitted through the wheel hub, the axle shaft, the master gear of the differential, the differential spider, the other master gear and the differential housing to the double ball thrust bearing, which latter is firmly supported by the axle housing. The practice of using two ball thrust bearings at the differential is quite prevalent in Europe, but usually one thrust bearing is placed on either side of the differential, whereas Mr. Barrett places both on the same side.

Lubrication—The rear axle housing is generally filled with non-fluid oil, and in order to prevent this from working through the bearings into the axle tubes, packings are generally provided at the inner ends of the tubes, as illustrated in Figs. 158 and 159. It is a good idea to provide a plugged hole for replenishing the grease, in the cover plate or near the top of the casing, so as to make it unnecessary to remove the entire cover plate for this purpose, and a drain plug should be provided at the lowest point of the casing, so all lubricant and dirt may be conveniently washed out with gasoline or kerosene. In Europe the cases are often provided with large filling spouts.

Truss Rod—Probably more than 90 per cent. of all live axle designs have an under-running truss to relieve the axle housing of the vertical bending moment. The middle of the truss is generally retained between projections at the bottom of the gear case, and the ends are secured to fittings fastened to the axle housing between the spring supports and the end, these anchorages being generally integral with the brake support. The truss may be tightened by means of nuts on both ends outside the brake support, or by means of a turnbuckle, as shown in Fig. 171, in which latter case the ends of the rod are hinged to the axle tube. The threaded ends of the rods should preferably be upset so the thread will not reduce the strength of the rod.

The downward bending moment due to the weight on the springs at any point between the spring seats is $w\ l$, where w is the weight on one spring seat and l the distance between the

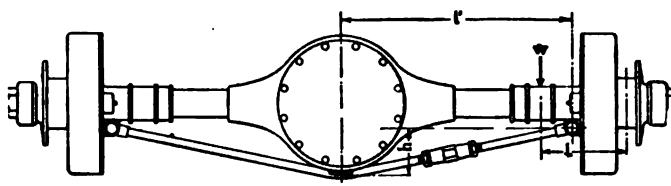

FIG. 171.—REAR AXLE TRUSS.

centre plane of the wheel and the centre of the spring seat. The truss produces an upward bending moment which is a maximum at the middle of the axle and decreases uniformly toward the truss anchorages. Its bending moment diagram therefore is a triangle, whereas the diagram of the bending moment due to the load on the springs is a trapezoid. Consequently, the two bending moments cannot entirely neutralize each other, except at certain points.

Let T be the tension in the truss rod. Then the vertical component of this force, which presses upward on the driving gear housing is $T \sin \theta$, and the bending moment at the middle of the axle housing due to this upward pressure is $T\ l' \sin \theta$, where l' is the horizontal distance from the centre of the axle to the truss anchorage. Since the angle θ is in every case small, it is permissible to substitute for sin θ

$$\tan \theta = \frac{h}{l'},$$

which makes the upward bending moment $T\ h$. The permissible tension T in the rod, of course, is proportional to the

cross sectional area of the rod or to the square of its diameter d, hence the moment is proportional to $d^2 h$. The upward bending moment due to the truss should be proportional to the downward bending moment $w l$ due to the weight on the springs. Hence we may write

$$d^2 h \sim w l.$$

and

$$d \sim \sqrt{\frac{w l}{h}}$$

The data at hand shows that in average modern practice

$$d = \sqrt{\frac{w l}{7{,}000\, h}} \qquad (51)$$

The actual tension in the truss rods, of course, depends upon how tightly they are drawn up, and the load that must be carried by the truss in any particular design depends upon the rigidity of the axle housing itself. A large part of the load on the truss results from the shocks on the unsprung weight at the middle of the axle, and if this weight is unusually great, as in the case of a transmission axle, for instance, the truss may be made somewhat heavier than given by the formula.

Rear Axle Torsion and Thrust—The reaction between the teeth of the bevel gear and pinion causes a pressure on the bearing of the bevel pinion shaft, and this pressure tends to cause the axle housing to rotate around the axle. As in all similar cases, action and reaction are equal and opposite, and the axle housing tends to turn "backward" with the same torque as is impressed upon the axle shafts in the "forward" direction. Therefore, it is obvious that the torsional effect on the axle housing may, under certain conditions, as in driving on the low gear under full engine power, assume very high values, and means must be provided to prevent the housing from yielding to this torque. In a considerable number of cars the body springs are depended upon to keep the axle housing in position against the torsional reaction. In cars fitted with a single universal joint in the propeller shaft the latter is often surrounded by a so-called torque tube, whose forward end may have a bearing on the propeller shaft or be suspended from a cross member of the frame, and whose rear end is rigidly fitted into the rear axle housing. In cars with two universal joints a torque arm rigidly secured to the rear axle housing extends forward to a frame cross member to which it is linked in some manner.

Besides the torsional effect, there is also a forward thrust on the axle housing. All of the propelling effort is produced by the reaction of the driving wheels on the ground, whereas a good deal of the resistance to motion is made up of the road resistance encountered by the front wheels and the air resistance on the body. The force necessary to overcome these latter resistances must be transmitted from the rear axle housing to the body. On the other hand, when a car is to be stopped quickly, by the application of the brakes, most of the kinetic energy that has to be dissipated is stored up in the parts supported by the vehicle frame, whereas the braking resistance takes effect at the ground contact of the rear wheels. Hence there is a strong retarding pull exerted by the rear axle housing on the vehicle frame, which in the absence of special members is transmitted by the body springs. However, some designers provide special thrust rods between the axle housing and the frame, these generally extending underneath the side frame members, being hinged to both connected parts so as to allow of free spring action.

In addition to the torsion and thrust on the rear axle housing, due to the transmission of power, the axle is subjected to other stresses, which are the result of impacts between the driving wheels and road obstructions. For instance, if one of the driving wheels strikes an obstruction rising some distance above the road surface, the shock tends to throw the axle out of alignment with the frame. This is provided against in some designs by diagonal brace rods running from the forward end of the torque tube to the outer ends of the axle housing. On the other hand, the axle must be allowed freedom of motion in a vertical plane so it may follow the irregularities of the road surface without straining any portion of the running gear.

Torque Tubes—The maximum bending moment on the torque tube or torque rod may be calculated on the basis of the torque necessary to slip the rear wheels on a road surface on which rubber tires have a friction coefficient of 0.6. For instance, if the rear axle carries a maximum load of 2,000 pounds and the wheels have a radius of 16 inches, then the maximum torque is

$$16 \times 2{,}000 \times 0.6 = 19{,}200 \textit{ pounds-inches.}$$

Suppose that the distance from the axis of the rear axle to the point of support of the torque tube is 40 inches, then the maximum reaction of the support is

$$\frac{19,200}{40} = 480 \textit{ pounds,}$$

The bending moment at any point along the tube may then be found by multiplying this reaction by the distance of the particular point considered from the point of support. The most important point in this connection is generally where the tube enters the cast fitting. We will assume this distance to be 24 inches. Then the bending moment at this point is

$$24 \times 480 = 11,520 \textit{ pounds-inches.}$$

Owing to the fact that the torque figured on is not the normal working torque but the very maximum that can be transmitted, only a small factor of safety need be figured on. With the ordinary carbon steel tubing a stress of 25,000 pounds per square inch can be allowed.

The maximum forward or backward thrust of the rear axle is equal to the adhesion of the wheels to the ground, viz.:

$$0.6 \times 2,000 = 1,200 \textit{ pounds.}$$

This, too, is more than is ever attained in normal operation; for, assuming the car with load to weigh 3,200 pounds, the propelling effort up a 20 per cent. grade at low speed on fair roads is only about 720 pounds, and not even all of this has to be transmitted to the frame. About the only condition under which a thrust of 1,200 pounds would be attained is when the wheels are locked by the brakes.

Owing to the fact that the bending moment varies from nothing at the point of support to the maximum at the joint of the tube to the driving gear housing, it is customary to reinforce the rear end of the tube by slipping another tube over it or into it. The forward end of the reinforcement should be tapered down to a sharp edge so as to avoid an abrupt change in section tending to localize the stresses, and in the case of an outside reinforcement also for the sake of appearance.

Let us assume that in our example we use a propeller shaft tube of 2 inches outside diameter and one-eighth inch thickness of wall. At 25,000 pounds per square inch this will sustain a bending moment of

$$\frac{3.14\,(2^4 - 1\tfrac{3}{4}^4) \times 25,000}{32 \times 2} = 8,11 \textit{ pounds-inches.}$$

This is the maximum bending moment at a distance

$$\frac{8,117}{480} = 17 \textit{ inches (appr.)}$$

from the support and the remaining length of the tube, therefore, should be reinforced.

The practice of taking both the driving thrust and torque reaction on the chassis springs, or using what is known as the Hotchkiss drive, is now quite prevalent in both pleasure car and truck work.

Torque Tube Supports—The axle tube may either take up both the torque and the forward thrust on the rear axle housing, or it may take up only the former, and the method of supporting its forward end varies accordingly. Fig. 172 illustrates a construction in which only the torque is taken up by the tube, the forward end of the latter riding on the propeller shaft through the intermediary of an anti-friction bearing. The forward end of the propeller shaft is supported by the universal joint which is secured to the rear end of the change gear primary shaft. A disadvantage of this construction is that the torque reaction has to be taken through the

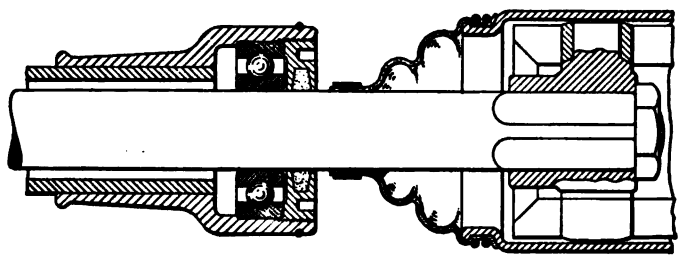

FIG. 172.—TORQUE TUBE RIDING ON PROPELLER SHAFT.

universal joint bearings. The pressure due to the torque reaction also comes on the rear bearing of the change gear box, but this is not an unmitigated evil, since the torque reaction is directed perpendicularly upward, whereas the gear load on this bearing when either of the lower gears is in operation is directed almost perpendicularly downward, hence the torque reaction partly neutralizes the gear load. Of course, with the direct drive in operation, there is no gear load on the rear bearing, the only load on it being that due to the torque reaction, and since this is always far below the rated capacity of the bearing there is no serious disadvantage in this.

A second method of supporting the forward end of the torque tube is by means of a fork hinged to a cross member of the frame or to the change gear box, as shown in Fig. 173. In order that the rear axle may be able to move freely in the

vertical plane, as required by road unevennesses, the fork must swivel on the front end of the torque tube. The joints of the fork and the abutting surfaces of its hub should be liberal in size and provided with means for lubrication. The fork is usually drop forged, and its arms are made of T-section. The axis of the hinged joint should coincide with the axis of the universal joint so that the propeller shaft will always be concentric with the torque tube.

A third method of supporting the forward end of the torque tube is by means of a spherical joint which generally also forms

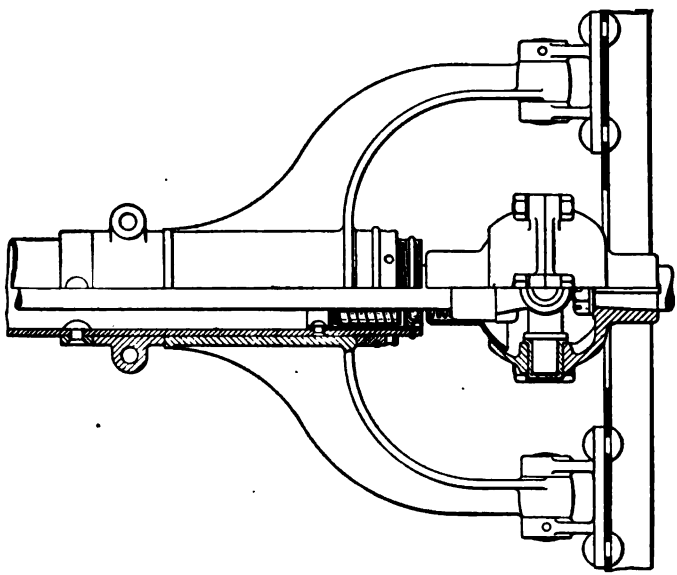

FIG. 173.—FORKED SUPPORT OF TORQUE TUBE.

a protecting housing for the universal joint in the propeller shaft. As shown in Fig. 174, an acorn-shaped housing is bolted to the rear of the change gear case and also to a cross-member of the frame which is of special shape, with a hole at the centre for the propeller shaft and torque tube to pass through. The rear end of this housing is turned off spherically to form a seat for a spherical flange formed on the forward end of a sleeve secured to the forward end of the torque tube. A ring with a spherical bearing surface is bolted to the frame cross-member in such a manner that the spherical portion secured to the torque tube works freely be-

tween the two parts with spherical surfaces secured to the frame. A leather boot or a packing ring has to be provided to protect the outer working surface from dust and grit. The universal joint is located centrally within the spherical joint and the forward end of the propeller shaft is generally supported in a ball bearing, though some axles have recently been designed which do away with this forward bearing, relying on the universal joint for "steadying" the forward end of the shaft. This type of connec-

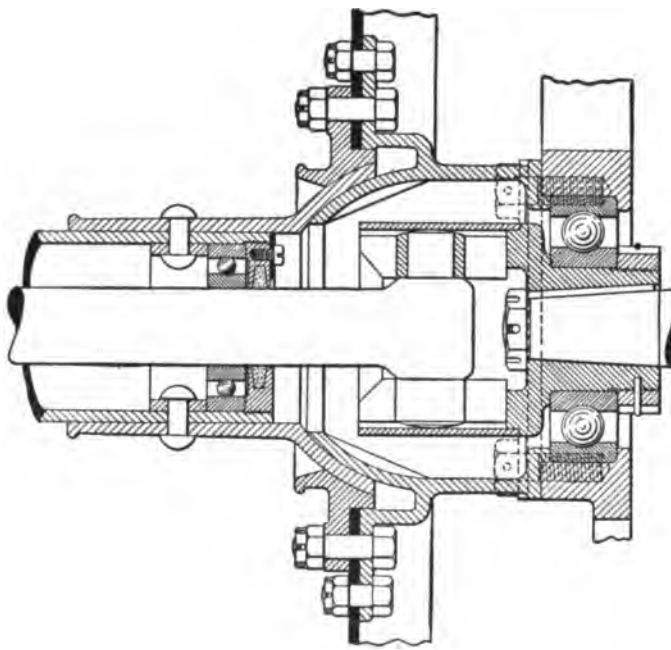

FIG. 174.—SPHERICAL SUPPORT OF TORQUE TUBE.

tion between the frame and the rear axle takes up frame thrust in both directions (driving and braking) as well as torsion, and makes for a very substantial construction.

Effect of Spring Play on Drive—In Fig. 175 is shown a shaft and bevel gear drive with a single universal joint and a torque tube surrounding the propeller shaft. The forward end of the propeller shaft is shown in its highest position, 22 inches above the ground. In Fig. 176 the same drive is shown with the forward end of the propeller shaft in its low-

est position, 16 inches above the ground. A relative change in position of axle and frame occurs very suddenly when the rear wheels strike a waterbar, for instance. As the springs compress the forward end of the propeller shaft drops substantially in an arc of a circle, and this angular motion of the propeller shaft around the rear axle axis entails a corresponding rotary motion of either the bevel gear or the bevel pinion. That is, the bevel gear, and consequently the pair of road wheels, will move around their common axis through an angle equal to that described by the propeller shaft or the bevel pinion, or the engine crankshaft will turn around its axis through an angle equal to the product of the angle

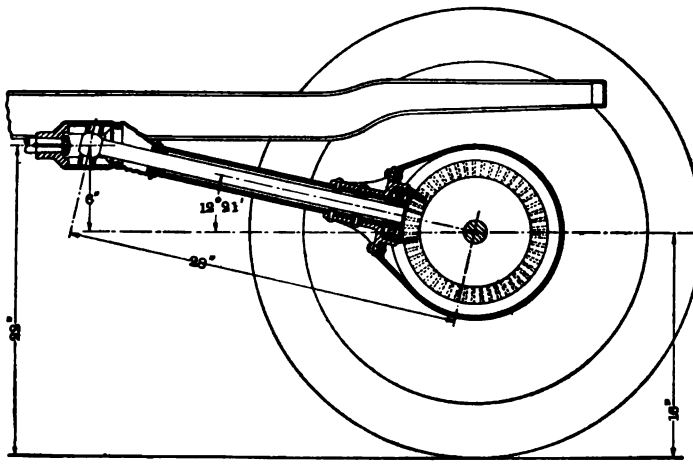

FIG. 175.

described by the propeller shaft by the ratio of the number of bevel gear teeth to the number of bevel pinion teeth. In the illustration the horizontal distance between the axle centre and the forward end of the propeller shaft is 28 inches. With the springs compressed the propeller shaft occupies a horizontal position, while with the springs extended it makes an angle with the horizontal whose sine is

$$\frac{22-16}{28}=0.214,$$

viz., about 12½ degrees. With a bevel gear ratio of 3:1, this corresponds to an angular motion of 37½ degrees of the bevel pinion. Therefore, in the design shown in Figs. 175

and 176, if the frame suddenly drops 6 inches relatively to the axle, either the road wheels will have to accelerate so as to move through an extra angular distance of 12½ degrees during the short space of time that the compression of the springs takes place, or else the engine has to slow up so its crankshaft will turn through 37½ degrees less than normally during this period. Both changes in motion are opposed by the inertias of the respective moving parts, and in reality the car will be slightly accelerated and the engine retarded by the compression of the springs. Preferably the play of the springs should have absolutely no effect on the motion

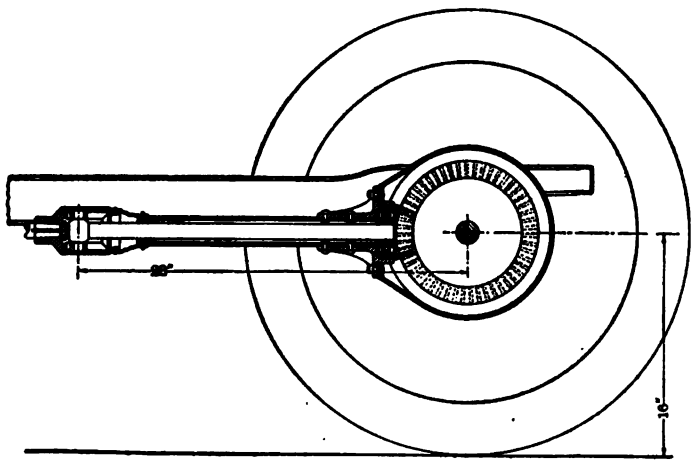

FIG. 176.

of the car and the engine, for then the springs would act most freely and the transmission parts would not be subject to shocks due to this cause.

In Figs. 175 and 176 the propeller shaft is unusually short, which exaggerates the influence of spring play on the uniformity of transmission. The designer's aim always should be to make the propeller shaft as long as possible, especially if only a single universal is used. If the shaft is twice as long as shown in the cuts—which is not uncommon—the speed fluctuations will be almost halved.

When two universal joints are used a torque rod is usually employed instead of a torque tube concentric with the propeller shaft. By supporting the front end of the torque rod

between springs from the frame cross member, the shock on the transmission members due to a sudden drop of the frame is lessened. The reason why this is so is immediately apparent, because, on account of the spring suspension of the torque rod, the forward end of the latter need not drop as much as the frame.

The condition insuring that there shall be no effect on the uniformity of the drive is that the angle of the pinion axis with the ground plane remain constant. This end can be attained very nearly by connecting the axle housing to the frame by means of a pair of parallel links, as shown in Fig. 177. If the two links are of absolutely the same length and

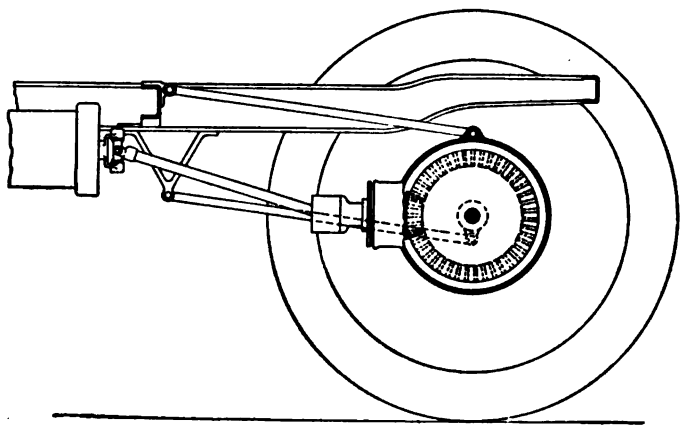

FIG. 177.

the front and rear points of linkage are the same distance apart, then the angle made by the axis of the bevel pinion with the plane of the frame will remain absolutely constant. However, this does not quite meet the above mentioned requirement that the pinion axis has to remain at the same angle with the ground plane, since if only the rear springs compress the angle of the frame plane with the ground plane changes. For instance, suppose that when the springs are extended both the frame and the pinion axis are absolutely horizontal. Then when the rear springs are compressed the frame will slant toward the rear and so will the pinion axis. Since the pinion axis always intersects the rear axle axis it means that the pinion has moved slightly upward, thus

causing a slight retardation in the speed of the car or an acceleration in the speed of the motor. This effect is really so slight as to be negligible, but it can be entirely eliminated by making the upper rod longer or placing the rear pivots farther apart than the front pivots. This linkage is used by Deasy and Lanchester in England, among others.

Some experiments by means of models on the effect of spring play on bevel gear drives were made several years ago by S. Gerster, of Courbevoie, France, and were reported in THE HORSELESS AGE of December 15, 1909. The experimental apparatus consisted of the rear portion of a vehicle frame, a set of rear springs, an axle, a pair of wheels and the bevel gear drive. The rear wheels were fixed to a wooden base, and double cords were attached to the frame at three points, these cords passing through holes in a wooden base and over pulleys on the under side of the base, and were connected to a single pull rod underneath, by pulling on which the frame could be lowered relatively to the base a distance of 6 inches. On a cross-member of the frame was mounted a dial, and to the forward end of the propeller shaft directly in front of this dial was secured a pointer, which latter moved over a scale on the dial graduated in degrees. Mr. Gerster constructed models of this description with all of the different types of axle linkage in common use. The length of the propeller shaft was the same in every case. When the frame was depressed 6 inches by pulling on the cords the pointer would move the following angular distances over the dial with different linkages:

	Degrees.
Torque tube hinged to cross member of frame	54
Triangular torque tube spring supported from frame and radius rods at the sides	31
Only connection through three-quarter elliptic springs	5
Parallel links; top one somewhat shorter than lower ones—less than	1

Torque Rods—In American practice three general designs of torque rods are met with, viz., rods of round section, either solid or hollow, which are fitted into a socket formed integral with the driving gear housing, as shown at *A*, Fig. 178; pressed steel rods of channel section, as shown at *B*, or triangular rods, as shown at *C*. There are also some examples of malleable iron torque rods of I section, pressed steel torque rods of I section made by riveting two channels together back to back, and wooden torque bars.

A tubular torque rod, of course, is preferable to a solid round one, since for equal strength it is lighter. The reason

that solid rods are, nevertheless, used to quite an extent is undoubtedly that it is much easier to taper the solid rod so the strength of the section at every point is proportional to the stress at that point. Tubular rods can be tapered only with difficulty, and the common plan is to use tubes of uniform diameter and insert one or two reinforcing tubes from the rear end. The forward ends of these reinforcing tubes should either be tapered out or else cut off at an angle so as to avoid a sudden change in the strength of the section.

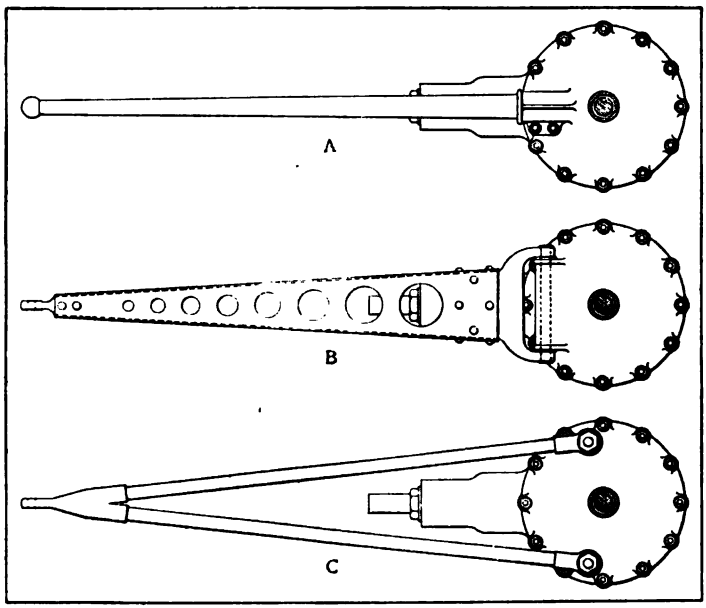

FIG. 178.—TYPES OF TORQUE RODS.

Pressed steel and triangular torque rods are frequently connected to the driving axle housing by means of a vertical hinge joint, as shown at *B*, Fig. 178. This obviates undue strains on the casing and torque rods in the case of severe lateral shocks on the rear system, as in striking a curb in skidding. It will be seen that in the construction shown at *B* a drop forged or cast fork is riveted to the pressed steel member for making the joint to the driving gear housing. In other constructions the housing is formed with a flat to

which the pressed steel member is bolted directly. In the case of pressed steel members some of the material of the web of the channel is generally removed, as shown in Fig. 178, thus eliminating weight without materially reducing the strength, since the material near the neutral axis is under little strain.

The advantage of the triangular torque rod is that its members work under tension and compression instead of under bending stresses. The individual members are generally tubu-

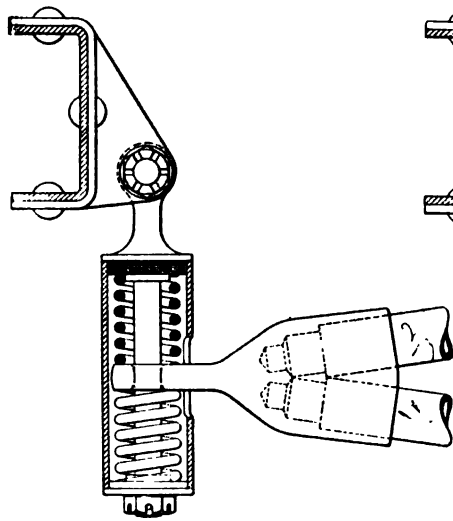

FIG. 179.

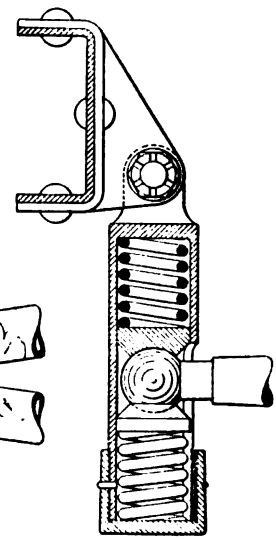

FIG. 180.

SPRING CUSHION SUPPORT FOR FORWARD END OF TORQUE ROD.

lar. Often they are secured to the driving gear housing by two of the bolts holding the halves of the housing together, though occasionally they are secured thereto by special bolts, as shown in Fig. 178.

Two common methods of supporting the forward end of the torque rod from the frame are illustrated in Figs. 179 and 180, respectively. From a bracket riveted to a frame cross-member depends a freely swiveled cylindrical spring housing containing two coiled springs between which the forward end of the torque rod is cushioned. The end of the rod is made either in the form of an eye, as in Fig. 179, or

in the form of a ball, as in Fig. 180, in which latter case it is held between two spring plates with part spherical depressions

The simplest construction consists in a simple link connection between the frame bracket and the torque rod, as shown in Fig. 181. This, of course, does not afford the cushioning effect that the spring support does. In order to obtain some of this cushioning effect without the use of springs, some foreign manufacturers of motor trucks use wooden torque bars.

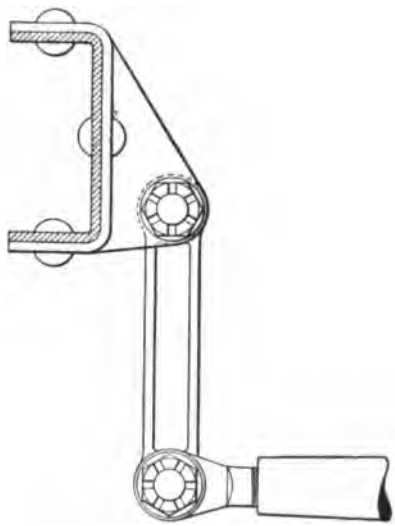

FIG. 181.—LINK SUPPORT OF TORQUE ROD.

The stresses in torque rods and the sections required are calculated the same as in the case of torque tubes.

Diagonal Brace Rods—The tendency of the rear axle to be thrown out of alignment with the frame when one of the driving wheels strikes a road obstruction has already been referred to. Some designs of axle housing, as, for instance, the Fiat pressed steel housing, are amply strong to withstand these stresses, but others require radius rods to be fitted between the axle housing and the side frames, or diagonal brace rods between the spring seats or brake supports on the axle housing and the forward end of the torque tube. A typical rear axle construction with diagonal brace rods is

shown in Fig. 182. The braces are made either tubular or solid, and either hinged at both ends or at the rear end only, and screwed into the fitting at the forward end.

The spring seats and brake supports also are integral parts of the rear axle, but they will be discussed under the headings of springs and brakes, respectively.

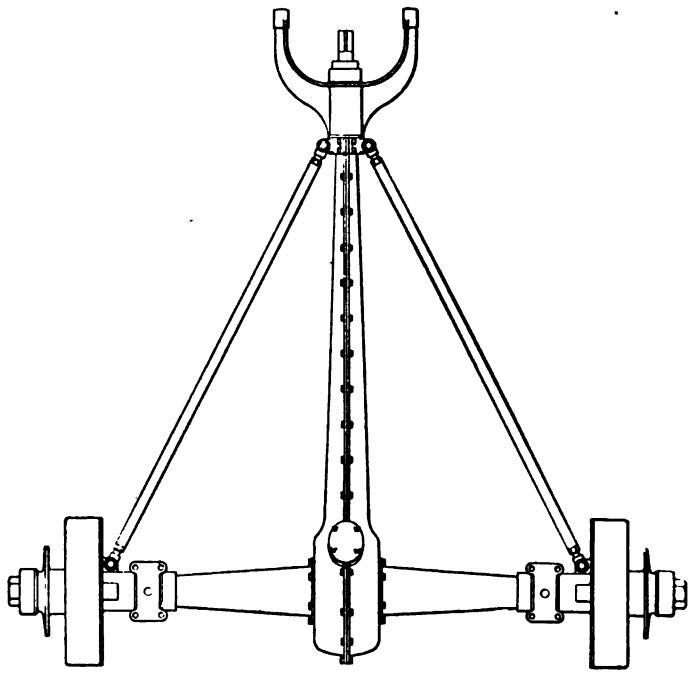

FIG. 182.—DIAGONAL BRACE RODS.

Bevel Gear Efficiency—Some tests of the efficiency of transmission in bevel gear driven rear axles were made several years ago by the H. H. Franklin Mfg. Co., Syracuse, N. Y., and were reported by G. Everett Quick in THE HORSELESS AGE of February 12, 1908. The tests were conducted in substantially the same manner as those of change gears, already referred to, except that two absorption dynamometers were used, one connected to either rear axle shaft, and the differential was locked. Fig. 183 gives the results of tests of a full floating axle. The bevel gears had five pitch 14½ degree

involute teeth and gave a gear ratio of 15:52. They were cut from 3½ per cent. nickel steel blanks, case hardened, the hardened surfaces of the teeth being polished by running the gears together in a mixture of emery and oil. The length of face was 1½ inches. The axle had been run for about 3,000 miles previous to the test. It will be seen from the diagram that the maximum efficiency is about 97 per cent., and the efficiency is above 95 per cent. for a considerable range in horse power transmitted and speed of revolution. During the test the axle gears were run in a bath of graphite and oil. The losses shown by the diagram include both gear and bearing losses, but the latter are very small, as all bearings were radial ball or ball thrust bearings. A semi-floating

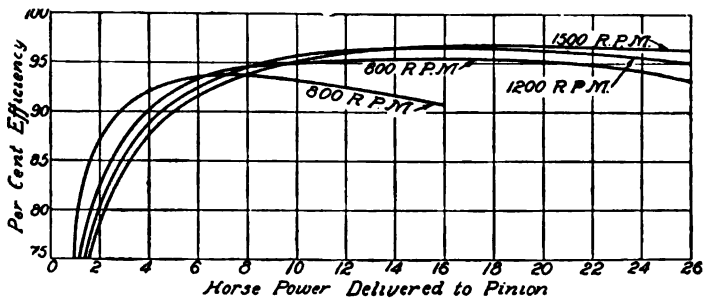

FIG. 183.—EFFICIENCY OF BEVEL GEAR DRIVEN, FULL FLOATING REAR AXLE.

axle was also tested and showed substantially the same maximum efficiency, but a slightly higher efficiency at small loads.

Critical Speed of Shafts.—Not long after the shaft drive became popular trouble began to develop from inordinate vibration and resulting permanent bending or breaking of the propeller shafts at certain critical speeds, especially on cars with unit power plants or transmission axles, which necessitate the use of exceptionally long propeller shafts. The occurrence of such trouble was first brought to public attention by the provision in certain cars of intermediate bearings on the propeller shaft. The trouble may have seemed mysterious at first, but the phenomenon was not entirely new, as similar trouble had been experienced with steam turbines some years previously, and a mathematical explanation of the phenomenon

of critical speeds of revolving shafts had already been given. The explanation is, briefly, as follows:

In spite of careful workmanship the center of mass of the revolving shaft will never lie exactly in the axis of revolution. Owing to the eccentricity of the center of mass an unbalanced centrifugal force is produced which causes the shaft to vibrate. The phenomenon is the more pronounced if the shaft carries a heavy disc at the middle of its length, whose center of mass lies outside the axis of rotation. (See Fig. 184.) Let the center of mass be at a distance d from the axis of revolution of the shaft. Under the influence of centrifugal force the shaft at the middle of its length will deflect the distance y from its neutral position. When thus deflected there will also be an unbalanced

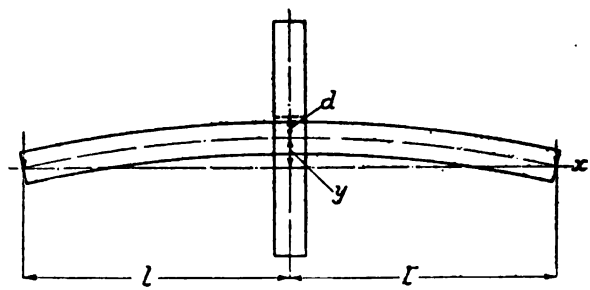

FIG. 184.—SHAFT CARRYING A CENTRAL UNBALANCED DISC.

centrifugal force acting on the mass of the shaft, which will add to the centrifugal force acting on the mass of the disc, but for the present purpose it is permissible to neglect the former. Denoting the mass of the disc by m, the centrifugal force is expressed by

$$F = m\ (y + d)\ \omega^2,$$

ω being the angular speed in radians per second.

This force is balanced by the elastic force of the shaft which is proportional to the deflection and may, therefore, be represented by

$$F_e = a\ y.$$

Hence

$$m\ (y + e)\ \omega^2 = a\ y$$

from which it follows that

$$m\ y\ \omega^2 + m\ e\ \omega^2 = a\ y$$

and

$$y = \frac{m e \omega^2}{a - m \omega^2}$$

When $a = m \omega^2$ the deflection becomes infinite; that is, unless the vibration of the shaft is limited by bearings or guards, the shaft will break. This, therefore, is the condition defining the critical speed. There is one other exception in addition to that noted above which would preclude breaking of the shaft, and that is that the speed of revolution of the shaft varies so rapidly that it remains near the critical speed an insufficient length of time to permit of a dangerous vibration being attained. Since the equation defining the critical speed is

$$a = m \omega^2$$

the value of the critical speed is evidently

$$\omega = \sqrt{\frac{a}{m}}$$

In order that the centrifugal force may be expressed in pounds (the angular speed ω being given in radians per second) the linear dimensions must be given in terms of the foot, and a then is the force necessary to deflect the shaft one foot at the middle of its length.

Analysis of Critical Speeds.—Now consider a section dx of a freely supported shaft carrying only its own weight. When the shaft rotates the shaft section dx is under the influence of two external forces, the force of gravity and centrifugal force. With the shaft proportions found in practice the former has no appreciable bending effect and may be neglected. The centrifugal force puts a load on the shaft which revolves with it and subjects it to shear and bending stresses. These latter can be determined by means of the theory of beams, the shaft being equivalent to a simple beam supported at both ends. When the shaft is in equilibrium the external (centrifugal) and internal (elastic) forces must neutralize each other in every plane.

Let the shear at the two sides of the infinitesimal section dx of the shaft be denoted by S and S' respectively. The centrifugal force on the section dx is proportional to the length dx and may be represented by $p\ dx$, where p is the centrifugal force per unit length. Then, since there must be equilibrium in the vertical plane (see Fig. 185)

$$S' - S + p\ dx = O$$

But

$$S' - S = d\,S$$

hence

$$\frac{dS}{dx} = - p$$

Also, taking moments around the center of gravity of the section dx

$$M' - M - S' \frac{dx}{2} - S \frac{dx}{2} = O$$

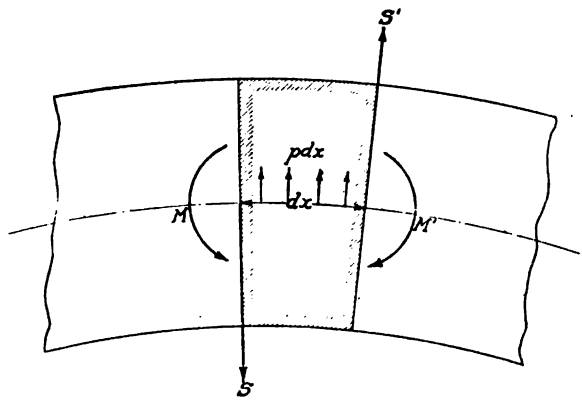

FIG. 185.—DIAGRAM OF CENTRIFUGAL AND ELASTIC FORCES.

and since

$$M' - M = dM$$

we have

$$dM = \frac{S' + S}{2} dx = S\,dx$$

This relation can now be combined with the equation of the elastic curve of a beam, viz.,

$$\frac{d^2y}{dx^2} = \frac{- M}{E\,I}$$

the minus sign being used here to correspond with the designations in the cut.

Since

$$\frac{dM}{dx} = S$$

$$\frac{dS}{dx} = -p = \frac{d^2M}{dx^2} = -EI\frac{d^4y}{dx^4}$$

Hence

$$p = EI\frac{d^4y}{dx^4} = m\omega^2(y + d)$$

The general integration of this equation gives

$$y = a\,e^{cx} a'\,e^{-cx} + b\cos cx + b'\sin cx - d$$

in which

$$c = +\sqrt[4]{\frac{m\omega^2}{IE}}$$

and e is the base of the natural system of logarithms. This equation covers all possible conditions of rotating shafts, and the values of the constants a a' b b' depend upon the conditions of any particular case—whether the shaft is freely supported or rigidly held in bearings, supported at both ends or at one end only, etc.

If now we take a freely supported shaft like a propeller shaft with universal joints at both ends, and if we measure the abscissas from the middle of length of the shaft, then y must be an even function of x, in order that the same value for y may be obtained for equal positive and negative values of x. The third term of the above equation for y contains a cosine and the value of the cosine is the same for a positive and negative angle of equal magnitude. The sines of positive and negative angles are alike but opposite in sign. A change in the sign of x would not give the same value of opposite signs for each of the first two terms. Consequently variations in the first two terms due to a change in the sign of x could not be compensated for by a corresponding variation in the fourth term. The conclusion to be drawn is that when x changes sign there is no variation in the sum of the first two terms, and no variation in the value of the fourth term. From this it follows that

$$a = a' \text{ and } b' = o$$

This gives us

$$y = a\,(e^{cx} + e^{-cx}) + b\cos cx - d$$

Now when $x = l$ or $-l$

$$\frac{d^2y}{dx^2} = \frac{-M}{E\,I} = o,$$

because $M = o$.

Under these conditions

$$\frac{d^2y}{dx^2} = a\,(e^{cl} + e^{-cl}) - b\,cos\,cl = o$$

Hence

$$a\,(e^{cl} + e^{-cl}) = b\,cos\,cl$$

Substituting in the above equation for y and remembering that when $x = l$, $y = o$,

$$2a\,(e^{cl} + e^{-cl}) = d$$

$$a = \frac{d}{2\,(e^{cl} + e^{-cl})}$$

Also

$$2b\,cos\,cl = d$$

$$b = \frac{d}{2\,cos\,cl}$$

When $cos\,cl$ is zero the value of b, and consequently the value of y, the deflection becomes infinite, and the shaft runs at the critical speed. This is the case when $cl = \pi/2$, $3\,\pi/2$, $5\,\pi/2$, etc. There are, therefore, a number of critical speeds. Now, inserting the value of c in the equation for b and equating the latter to the smallest angle corresponding to a critical speed we get

$$l\sqrt[4]{\frac{m\,\omega^2}{I\,E}} = \frac{\pi}{2}$$

$$\frac{l^4\,m\,\omega^2}{I\,E} = \frac{\pi^4}{16}$$

$$\omega^2 = \frac{\pi^4\,I\,E}{16\,m\,l^4}$$

in which

ω is the angular speed in radians per second

I, the moment of inertia of the shaft section

E, the modulus of elasticity

m, the mass of the shaft per inch length

l, half the length of the shaft in inches.

The mass of the shaft section is equal to its weight divided by the constant of gravity, but in this case, as the units used must be the same throughout and as the shaft diameter and shaft length are expressed in inches, we must express the acceleration of gravity in inches per second per second, instead of feet per second per second. Therefore

$$g = 32.16 \times 12 = 386.$$

From the equation for ω the critical speed of any shaft can be calculated, but this equation is in a rather inconvenient form; it would be much preferable if the critical speed n in revolutions per minute could be calculated directly from the dimensions of the shaft, and this can be done if the equation is suitably transformed.

We have

$$\omega = \frac{2\pi n}{60}$$

$$\omega^2 = \frac{4\pi^2 n^2}{3{,}600}$$

$$I = \frac{\pi d^4}{64}$$

$$E = 30{,}000{,}000$$

$$m = \frac{W}{386}$$

$$W = \frac{\pi d^2}{4} \times 0.28 = 0.07\,\pi d^2$$

Hence

$$m = \frac{0.07\,\pi d^2}{386} = \frac{\pi d^2}{5{,}500}$$

$$l = \frac{L}{2}$$

$$l^4 = \frac{L^4}{16},$$

L being the whole length of the shaft between supports.

Inserting these values in the equation for ω^2 we get

$$\frac{4\pi^2 n^2}{3{,}600} = \frac{\pi^4}{16} \times \frac{d^4}{64} \times 30{,}000{,}000 \times \frac{5{,}500}{\pi d^2} \times \frac{16}{L^4}$$

which when simplified gives

$$n^2 = 2{,}320{,}000{,}000{,}000 \frac{\pi^2 d^2}{L^4}$$

Therefore

$$n = 1{,}520{,}000 \frac{\pi d}{L^2} = 4{,}800{,}000 \frac{d}{L^2}$$

This equation applies to solid round shafts. Equations for shafts with other sections can easily be derived by means of the equation for ω^2. It will be seen that this value varies directly as the moment of inertia of the section and inversely as the mass per unit length, all the other factors in the equation being independent of the section. Therefore

$$\omega^2 \sim \frac{I}{m}$$

$$\omega \sim \sqrt{\frac{I}{m}}$$

But m, the mass per unit length, is directly proportional to the area of the section, which we may denote by A. Consequently

$$\omega \sim \sqrt{\frac{I}{A}}$$

or as the least radius of gyration of the shaft section. For a solid circle of diameter d

$$\sqrt{\frac{I}{A}} = \sqrt{\frac{\pi d^4}{64} \times \frac{4}{\pi d^2}} = \sqrt{\frac{d^2}{16}} = \frac{d}{4}$$

For a hollow circle of outside diameter d and inside diameter d_1

$$\sqrt{\frac{I}{A}} = \sqrt{\frac{\pi (d^4 - d_1^4)}{64} \times \frac{4}{\pi (d^2 - d_1^2)}} = \sqrt{\frac{d^2 + d_1^2}{16}}$$

For a solid square shaft whose side measures d,

$$\sqrt{\frac{I}{A}} = \sqrt{\frac{d^4}{12} \times \frac{1}{d^2}} = \sqrt{\frac{d^2}{12}} = \frac{d}{3.46}$$

Hence a tubular shaft of outside diameter d and inside diameter d_1 has a higher critical speed than a solid round shaft, the ratio between the two critical speeds being

$$\frac{\sqrt{d^2 + d_1^2}}{d}$$

and a solid square shaft whose sides measure d has a higher critical speed than a solid round shaft of diameter d, the ratio of critical speeds being

$$\frac{d}{3.46} \div \frac{d}{4} = 1.155$$

Hence, we have the following formulae for the critical speeds of other than solid round shafts:

For a round tubular shaft,

$$n_c = 4{,}800{,}000 \frac{\sqrt{d^2 + d_1^2}}{L^2}$$

For a solid square shaft whose sides measure d

$$n_c = 5{,}520{,}000 \frac{d}{L^2}$$

Agreement with Practical Observations.—It has been found in practice that the actual critical speed is always somewhat lower than the calculated value. For instance, Stodola in "The Steam Turbine" gives several examples of tests for critical speeds of shafts. In five of these tests the critical speed was found to be 6 per cent., 8 per cent., 9 per cent., 13 per cent. and 14 per cent. below the calculated value. This discrepancy is undoubtedly due to the fact that the points of support are not rigid. An automobile propeller shaft when running at high speed will whirl in the same way as a heavy rope which is being swung around by two persons. If they cease their whirling effort their hands will nevertheless be carried around in a circle, and so with the propeller shaft supports. The latter consist of the universal joints which are fitted to shafts overhanging their bearings, and under the influence of the centrifugal force on the propeller shaft these short shafts will bend in the same plane as the propeller shaft, thus virtually increasing the distance between supports. The effect depends, of course, upon the relative stiffness and amount of overhang of the connected shafts, but it has been found that if the cal-

culated critical speed is not approached closer than within 15 per cent., a sufficient degree of safety is allowed in ordinary constructions.

The critical speed above discussed is the lowest critical speed. There is an endless number of higher critical speeds, but these are of no interest from a practical standpoint, as the shaft, to be safe, must be made of such dimensions that its lowest critical speed is never attained in practice.

The following table gives the critical speeds of solid round steel shafts of different diameters and lengths:

CRITICAL SPEEDS (R.P.M.) OF FREELY SUPPORTED SOLID STEEL SHAFTS.

d	L = 35"	40"	45"	50"	55"	60"	65"	70"
1 "	3,915	3,000	2,370	1,920	1,585	1,335	1,135	980
1⅛"	4,400	3,375	2,660	2,160	1,785	1,500	1,275	1,105
1¼"	4,900	3,750	2,960	2,400	1,985	1,670	1,420	1,225
1⅜"	5,400	4,125	3,260	2,640	2,180	1,835	1,560	1,350
1½"	5,880	4,500	3,550	2,880	2,380	2,000	1,705	1,470
1⅝"	6,380	4,875	3,850	3,120	2,580	2,170	1,845	1,595
1¾"	6,860	5,250	4,150	3,360	2,775	2,340	1,990	1,715

Shafts Fixed at Ends.—The case of a shaft fixed at both ends is not so common in automobile practice, but may occur, as, for instance, when the propeller shaft is surrounded by a torque tube mounted on roller bearings at both ends. A shaft so supported when under the influence of centrifugal force will form a compound curve, and as the distance between inflection points is then so much less, a greater centrifugal force is required to cause the deflection, consequently the critical speed is higher. An analysis of the problem shows that the critical speed of a solid round steel shaft of length L, fixed at both ends, is:

$$n_c = 11{,}240{,}000 \frac{d}{L^2},$$

and the critical speed of a hollow steel shaft fixed at both ends,

$$n_c = 11{,}240{,}000 \frac{\sqrt{d^2 + d_1^2}}{L^2}$$

Manufacture of Rear Axles.—The designs of rear axles differ widely, and as a result there is great divergence in the methods of manufacture, since the manufacturing processes naturally must be adapted to the design. For this reason it is not possible to give more than a very general description of rear axle manufacture in this work.

Among the most important parts of the axle are the bevel gear and its pinion. These must be very accurately cut in order that they may run with very little noise, even at high car speeds. Besides, the cutting of bevel gears involves much greater difficulty than the cutting of spur gears. The stocking or rough cutting can be done by means of a formed

FIG. 186.—STOCKING BEVEL GEARS.

cutter in a milling machine or gear cutter of similar type, as shown in Fig. 186, but the finishing should preferably be done in a bevel gear planer, as this insures greater accuracy. The bevel gears must also be case hardened or oil hardened, and to correct the defects due to warping when the gears are quenched, the latter are often run together in a special fixture with a mixture of emery and oil. Fig. 187 illustrates the process of grinding the gears in the plant of the Timken-Detroit Axle Co. by means of a machine developed in the company's own shop.

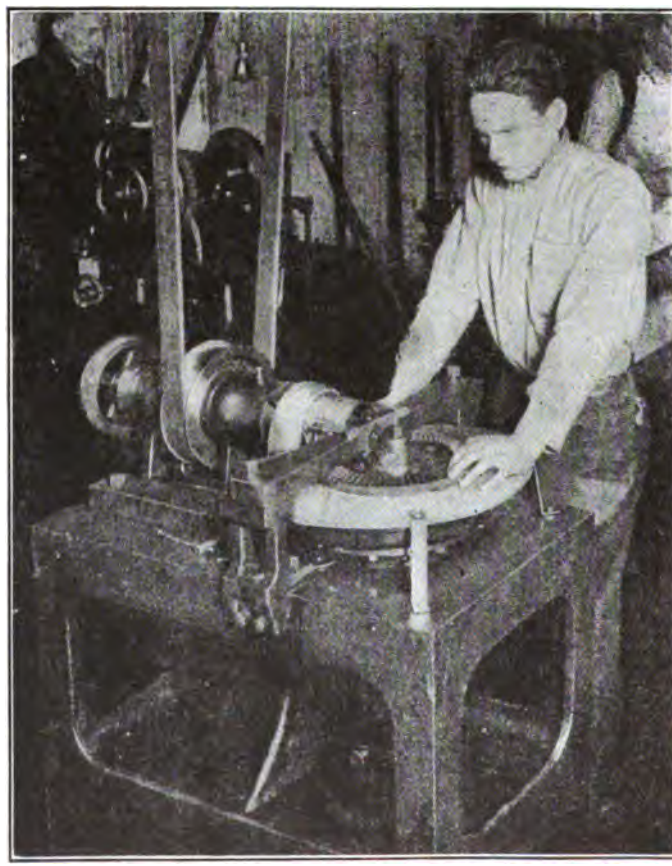

FIG. 187.—GRINDING-IN OF BEVEL GEARS.

The bevel pinion and gear are mounted on spindles at right angles to each other. The spindle on which the pinion is mounted is driven by belt from a countershaft and the other spindle through a pair of accurately cut bevel gears of the same ratio as the pair to be ground. The driving bevel gears are so adjusted as to run without back lash, and are enclosed to protect them from the emery powder with which the other gears are ground in.

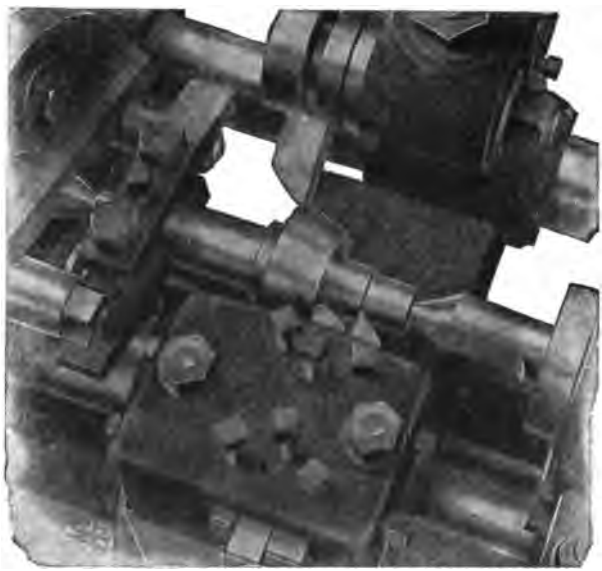

FIG. 188.—TURNING UP BEVEL PINION BLANK.

In bevel gear drives employing two universal joints in the propeller shaft, the bevel pinion and its shaft are frequently made integral, and Fig. 188 illustrates a time saving method of machining up such blanks in a Fay lathe made by the Jones & Lamson Machine Co., of Springfield, Vt. Three cutting tools are used, of which one is carried on the back rest, and all of the machining operations are performed at one setting.

As a rule, there are a great many machine operations to be performed on the driving gear housing, such as boring the holes for the axle tubes, the seats for bearings, etc. Fig. 189 illustrates the method of boring the gear carrier of a Timken-Detroit rear axle. In this part, the same as in the halves of a cast

driving gear housing, there are a number of concentric holes to be bored, and a turret lathe is therefore a very advantageous tool. In order to get the bores for the axle tube and for the propeller shaft housing absolutely at right angles with each other, some

FIG. 189.—BORING GEAR CARRIER IN VERTICAL TURRET LATHE.

manufacturers use special three spindle boring machines, one of the spindles being at right angles to the other two. The greatest accuracy is required in boring the seats for the bearings.

CHAPTER X.

THE WORM DRIVE.

Transmission of power by worm and worm wheel in an automobile originated in England, where it is used for both pleasure and commercial vehicles. More than a score of British manufacturers of pleasure cars fit either all or some of their models with worm drives, or give an option on this drive. The worm drive has also secured a foothold in Germany and France and is very largely used for commercial vehicle drives in this country.

Up to about twenty years ago the worm and wheel were considered merely a means for transmitting motion, as distinguished from a means for transmitting power. As it to be expected, when the teeth are not very accurately cut and when they run together dry or without lubrication, the efficiency of the gear is very low and its wear is rapid. Worm gearing was first developed for commercial power transmission purposes in connection with electric motors. These were the first high speed motors to come into practical use and high reduction ratios were required in many lines of application. For automobile work the worm gear was first taken up by F. W. Lanchester and the Dennis Brothers of England.

Advantages of Worm Drive.—The worm drive is at its greatest advantage when a high ratio of reduction is desired. With a bevel gear or chain drive it is difficult to secure a gear ratio of more than 5 to 1, if road wheels of the usual size are to be used, and in types of vehicles requiring a higher reduction ratio, including nearly all types of commercial vehicles except those shod with pneumatic tires, it is a question of using either the worm drive or a double reduction drive by bevel gears and chains. The worm drive then has the advantage as regards simplicity of construction. Among other advantages of this drive may be mentioned its absolutely silent operation and the possi-

bility of providing a very wide range of gear ratios without change in the distance between the axes of worm and wheel or in adjacent parts. The worm drive gives a symmetrical rear axle which is comparatively easy to assemble.

Theory of Worm Gearing—The worm gear as applied to automobile driving is similar to a helical gear, the worm being always of the multiple thread type, and some of the rules of helical gearing therefore also apply to worm gear. In a worm and worm wheel the gear reduction is equal to the quotient of the number of teeth in the worm wheel by the number of threads in the worm. The lead of the worm is the distance in the direction of the worm axis corresponding to one complete revolution of the worm thread. The angle of lead is the angle made by the worm thread at the pitch line with a plane perpendicular to the worm axis (also the angle made by a worm wheel tooth with the worm wheel axis). In connection with helical gears it is the custom to speak of the angle of spiral, which is the angle made by an element of the gear tooth with the gear axis, and in case the two axes are at right angles to each other (as in a worm and wheel) the angles of spiral for the two gears together make a right angle. In a worm gear the angle of lead corresponds to the angle of spiral for the worm wheel, while the complement of the angle of lead corresponds to the angle of spiral for the worm.

Following are definitions of some terms used in connection with worm gearing:

$$\text{Circular pitch (of wheel)} = \frac{\text{Pitch diameter} \times 3.1416}{\text{No. of teeth}}$$

$$\text{Axial pitch (of worm)} = \frac{\text{Lead}}{\text{No. of threads}}$$

Circular pitch of wheel = Axial pitch of worm.

Normal circular pitch = Circular pitch × cos of angle of lead.

In calculating worms and worm wheels the following equations may be used:

WORM

$$\text{Pitch diameter} = \frac{\text{No. of threads} \times \text{normal circular pitch}}{3.1416 \times \sin \text{ of angle of lead.}}$$

$$\text{Lead} = \text{Pitch diameter} \times 3.1416 \times \tan \text{ of angle of lead.}$$

$$\text{Outside diameter} = \text{pitch diameter} + \frac{2 \times \text{axial pitch}}{3.1416}$$

$$\text{Normal circular pitch} = \frac{3.1416}{\text{Normal diametral pitch.}}$$

WHEEL

$$\text{Pitch diameter} = \frac{\text{No. of teeth} \times \text{normal circular pitch}}{3.1416 \times \text{cos of angle of lead.}}$$

$$\text{Lead} = \frac{\text{Pitch diameter} \times 3.1416}{\text{tan of angle of lead.}}$$

$$\text{Throat diameter} = \text{pitch diameter} + \frac{2 \times \text{axial pitch}}{3.1416}$$

The centre distance or distance between the axes of worm and wheel is equal to one-half the sum of the two pitch diameters. Worm and wheel must be cut both either with right hand threads or with left hand threads. In an automobile drive with the engine rotating right-handedly as usual, worm and wheel must be cut with right hand threads when the worm is placed on top of the wheel, and with left hand threads when the worm is at the bottom.

If we cut a very thin section from the middle of the worm wheel we have a spur gear. If we cut a corresponding section from the worm, we have a rack, and since the flanks of a rack tooth to properly mesh with an involute gear must be a straight line, the faces of the worm teeth are straight. In the old type of worm used for transmitting motion, usually at a very high ratio of reduction, the sides of the teeth were made parallel, and most of the formulæ for worm gear efficiency, thrust, etc., found in text books are based on square faced worm teeth and are inaccurate when applied to inclined teeth. Parallel faced teeth cannot be used on multi-thread worms for automobile drives, as the worm wheel teeth would have to be undercut too much.

Pressure Angle.—In speaking of the inclination of the tooth flank, a distinction must be made between the normal pressure angle and the axial pressure angle. The axial pressure angle is the angle made by the line of intersection of a plane through the worm axis with the tooth flank, with the worm axis, and is represented by β in Fig. 190. This angle is evidently one-half of the angle described by the tooth flanks in the section plane if they are continued till they intersect. The normal pressure angle a is the angle included by two lines in a plane cutting the tooth normally or at right angles to its elements, these lines both passing through the pitch point in the tooth flank, one being perpendicular to the flank at that point and the other tangent to the pitch circle. The relation between the axial pressure angle and the normal pressure angle is illustrated in Fig. 191. In this figure the line cd is supposed to be perpendicular to ac and not in the plane of the paper.

$$\tan \beta = \frac{bc}{ac}$$

$$\tan \alpha = \frac{cd}{ac}$$

$$cd = cb \cos \phi$$

Substituting this value of cd in the preceding equation we have

$$\tan \alpha = \frac{cb \cos \phi}{ac} = \tan \beta \cos \phi$$

That is, the tangent of the normal pressure angle is equal to the tangent of the axial pressure angle multiplied by the cosine of the lead angle.

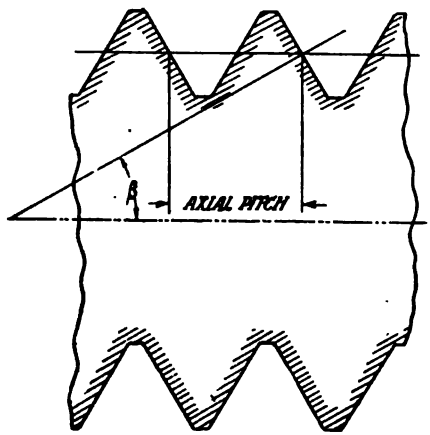

FIG. 190.—LONGITUDINAL SECTION THROUGH WORM WITH 30° AXIAL PRESSURE ANGLE.

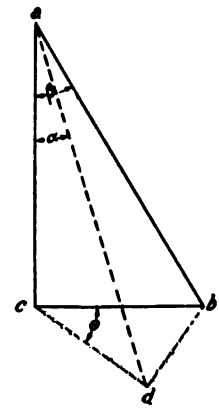

FIG. 191.—RELATION BETWEEN AXIAL PRESSURE ANGLE AND NORMAL PRESSURE ANGLE.

Most makers of worm gears for automobile transmission use an axial pressure angle of 30 degrees. With a lead angle of 35 degrees this corresponds to a normal pressure angle of 25 degrees 19 minutes. Normal pressure angles of 22½ and 14½ degrees have been used, but with these smaller pressure angles there is undercutting of the wheel teeth if the number of teeth is small. With the Hindley type of worm there is the further difficulty that the worm could not be assembled with the wheel if the pressure angle were too small.

Axial Pitch.—In ordinary toothed gearing, as the tangential

pressure which can safely be imposed upon the gears is proportional to the circular pitch of the teeth, the coarseness of the teeth increases with the power to be transmitted. The same relation between the strength of the teeth and their circular pitch exists in worm gears, but as the load capacity depends more upon the capacity of the gears for getting rid of the frictional heat than upon the mechanical strength of their teeth, and as the heat dispersing capacity of a gear varies little with the pitch of the teeth, the latter is to quite an extent a matter of choice. For pleasure cars and the lightest commercial vehicles the axial pitch is generally about ⅞ inch. Axial pitches as

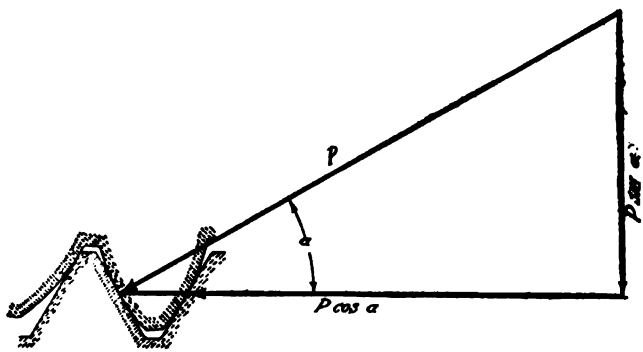

FIG. 192.—COMPOSITION OF NORMAL TOOTH PRESSURE.

large as 1⅞ inches have been used in some instances in heavy commercial work, but pitches of about 1¼ inches are more common. The larger the pitch the smaller the bottom diameter of the worm, and even if the worm is made integral with the shaft there is a limit to the depth of tooth, and consequently to the pitch, because if the proportion of the depth of tooth to the bottom diameter of the worm is too great the worm will possess insufficient torsional rigidity.

The length of the worm, if of the straight type, is usually made equal to 40 per cent. of the wheel pitch diameter and the included angle of worm contact may vary between 60 and 110 degrees, but usually is closer to the upper limit. The lead angles usually employed vary between 30 and 40 degrees. This, as will be seen from Fig. 194, is within the high efficiency range, and it also insures reversibility of the drive, that is, the car will coast freely down hill and can be pushed or towed.

Theoretical Efficiency.—When power is being transmitted from the worm to the wheel, there are two forces at work, namely, the surface pressure normal to the plane of contact and the frictional force in the plane of contact. If the material of the worm and wheel were absolutely unyielding there would be only a line contact, but since it is elastic the contacting parts compress so as to give a surface contact.

Referring to Fig. 192, the normal pressure P on the tooth surface can be resolved into two components, one $P \cos \alpha$, perpendicular to the tooth helix, and the other, $P \sin \alpha$, parallel thereto.

The former component is transferred to Fig. 193 and is there again resolved into two components, one, $P \cos \alpha \sin \theta$, in a plane perpendicular to the worm axis and the other parallel to the worm axis. For the present we are concerned only with the former, which is one of the two items making up the tangential force at the pitch line of the worm. The other item is due to the frictional force $P f$ (f being the coefficient of friction). This force can also be resolved into two components, viz., $P f \cos \theta$ tangential to the worm pitch circle, and $P f \sin \theta$ tangential to the wheel pitch circle. Hence the total tangential force on the worm pitch line is

$$P \cos \alpha \sin \theta + P f \cos \theta$$

and the total tangential force on the pitch line of the wheel is

$$P \cos \alpha \cos \theta - P f \sin \theta.$$

Multiplying these tangential forces by corresponding motions on the pitch circles of the worm and the wheel respectively, gives the input and output corresponding to that motion, respectively, and the ratio of the latter to the former is the efficiency. Suppose that there is a motion x in the direction of the line of contact. Then the component of this motion tangential to the worm pitch line is $x \cos \theta$ and the component in the direction of the wheel pitch line, $x \sin \theta$. Hence the ratio of velocities is

$$\frac{\text{wheel pitch line velocity}}{\text{worm pitch line velocity}} = \frac{x \sin \theta}{x \cos \theta} = \tan \theta$$

and if the worm moves a unit distance the wheel moves a distance equal to $\tan \theta$. Therefore, the work done upon the worm while a point in its pitch line moves a unit distance is

$$P \cos \alpha \sin \theta + P f \cos \theta$$

and the work done upon the wheel is

$$(P \cos \alpha \cos \theta - P f \sin \theta) \tan \theta.$$

The efficiency then is

$$e = \frac{(P \cos \alpha \cos \Theta - P f \sin \Theta) \tan \Theta}{P \cos \alpha \sin \Theta + P f \cos \Theta}$$

Dividing both numerator and denominator by $P \cos \Theta \tan \Theta$, we have

$$e = \frac{\cos \alpha - f \tan \Theta}{\cos \alpha + f \cot \Theta} \quad \ldots\ldots\ldots\ldots\ldots\ldots\ldots\ldots\ldots\ldots\ldots\ldots (52)$$

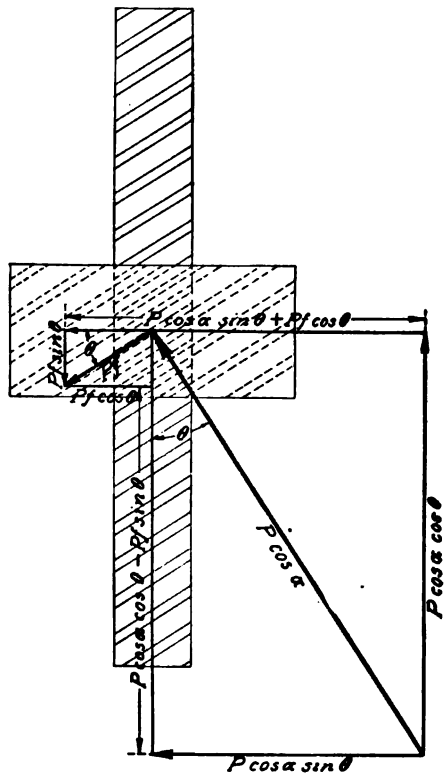

FIG. 193.—DIAGRAM SHOWING TANGENTIAL FORCES ON WORM AND WHEEL, RESPECTIVELY, AS WELL AS THRUST LOADS ON SHAFTS.

which is the general formula for worm wheel efficiency. Fig. 194 shows how the efficiency varies with the lead angle for two different coefficients of friction, viz., 0.02 and 0.04.

Thrust and Radial Bearing Loads.—The thrust load on the worm is equal to the tangential force on the wheel pitch circle and the thrust load on the wheel is equal to the tangential force on the worm pitch circle. The effect of tooth friction can be neglected, as in well cut gears with proper lubrication the friction coefficient is only about 0.02, and the error introduced by neglecting it is very slight. Denoting the full load torque of the engine by T, the worm pitch diameter by d, the wheel pitch diameter by D and the reduction ratio by r, we have for the tangential force on the worm pitch circle, and hence for the thrust load on the wheel, at full engine load and direct drive.

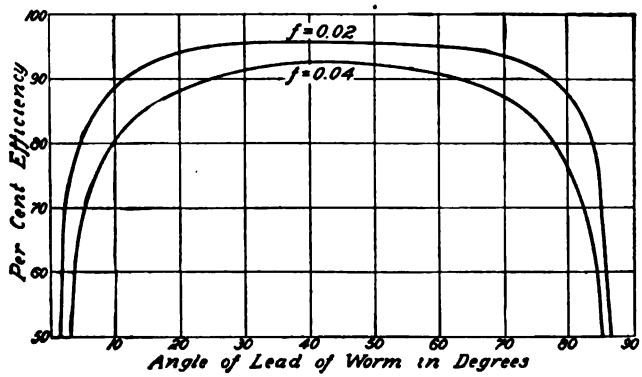

FIG. 194.—EFFICIENCY CURVES.

$$L_t = \frac{24\,T}{d}, \quad . \quad . \quad . \quad . \quad . \quad . \quad (53)$$

and for the tangential force on the wheel pitch circle; and, consequently, the thrust load on the worm,

$$l_t = \frac{24\,T\,r}{D} \quad . \quad . \quad . \quad . \quad . \quad . \quad (54)$$

The radial loads on both the worm and the wheel shafts are made up of two components which act at right angles to each other. The first is due to the pressure angle of the teeth; it passes through the center of tooth contact and is perpendicular to both the worm axis and the wheel axis. This is the force tending to separate the shafts and is, of course, the same for both the worm and the wheel. If we denote the normal tooth

pressure by P, then this component C_1 is equal to $P \sin \alpha$. But

$$P = \frac{l_t}{\cos a \cos \phi} = \frac{L_t}{\cos a \sin \phi}$$

Hence

$$C_1 = P \sin a = \frac{l_t \tan a}{\cos \phi} = \frac{L_t \tan a}{\sin \phi}$$

The other component of the radial load, C_2, is different for the worm and the wheel, respectively. For the wheel it is equal to the thrust load on the worm, l_t, and for the worm it is equal to the thrust load on the wheel, L_t. That the two components of the radial load on each shaft are at right angles to each other may easily be shown. Take, for instance, the components of the radial load on the wheel shaft. The first component, C_1 is perpendicular to the worm shaft, while the second component, the thrust load on the worm shaft, naturally is parallel to that shaft and hence must be perpendicular to the first component. There-

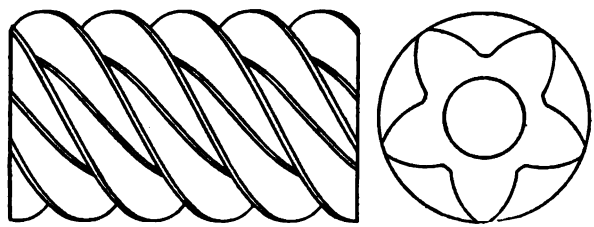

FIG. 195.—WORM WITH FIVE THREADS, 33 DEGREES LEAD ANGLE, 30 DEGREES PRESSURE ANGLE.

fore, the total radial load on the wheel shaft is equal to the square root of the sum of the squares of the components

$$L_r = \sqrt{l_t^2 + \left(l_t \frac{\tan a}{\cos \phi}\right)^2} = l_t \sqrt{1 + \left(\frac{\tan a}{\cos \phi}\right)^2}$$

But $\frac{\tan a}{\cos \phi} = \tan \beta$,

so that

$$L_r = l_t \sqrt{1 + \tan^2 \beta} \quad . \quad . \quad . \quad . \quad (55)$$

and if β, the axial pressure angle, has a constant value of 30 degrees then

$$L_r = 1.155 l_t$$

That is, the radial load on the wheel bearings is 15.5 per cent. greater than the thrust load on the worm bearings.

Similarly, the total radial load on the worm shaft is

$$l_r = \sqrt{L_t^2 + \left(L_t \frac{\tan a}{\sin \phi}\right)^2} = L_t \sqrt{1 + \left(\frac{\tan a}{\sin \phi}\right)^2}$$

which, after the value of $\tan a$ is substituted, becomes

$$l_r = L_t \sqrt{1 + \left(\frac{\tan \beta}{\tan \phi}\right)^2} \quad . \quad . \quad . \quad . \quad (56)$$

Center Distance.—The distance between the axis of the worm and the axis of the wheel bears a close relation to the maximum torque to be transmitted and therefore to the total weight of the vehicle. In commercial vehicle practice the smallest distance between axes, or the center-to-center distance, found in ½ ton and 1 ton trucks, is about 6¾ inches. For 5 ton trucks a center-to-center distance of about 9½ inches is used, and for worm gears for motor trucks of other capacities the center distance may be found approximately by the following equation

$$L = 0.7\, t + 6 \text{ inches} \quad . \quad . \quad . \quad . \quad (57)$$

where t is the truck capacity in tons.

As the worm pitch diameter

$$d = \frac{n\, p}{\pi \tan \phi}$$

and the wheel pitch diameter

$$D = \frac{N\, p}{\pi};$$

and as the center distance

$$L = \frac{D + d}{2},$$

we have

$$L = \frac{\frac{n\, p}{\pi \tan \phi} + \frac{N\, p}{\pi}}{2} = \frac{p}{2\, \pi}\left(\frac{n}{\tan \phi} + N\right). \quad (58)$$

Capacity of Worm Gears.—The question of the amount of power which a given worm will transmit is a very involved one. It depends more upon the capacity of the gear for disposing of the heat than upon the mechanical strength of its teeth. As the temperature of the worm and wheel and of the

oil bath rises, the oil becomes thinner, and if it should become too thin it would be squeezed out from between the teeth and cutting would ensue. The heat produced is almost directly proportional to the horse power transmitted. On the other hand, the amount of heat which the gear can dispose of without an excessive rise in temperature is proportional to the combined surface area of the worm and wheel. Of this the surface area

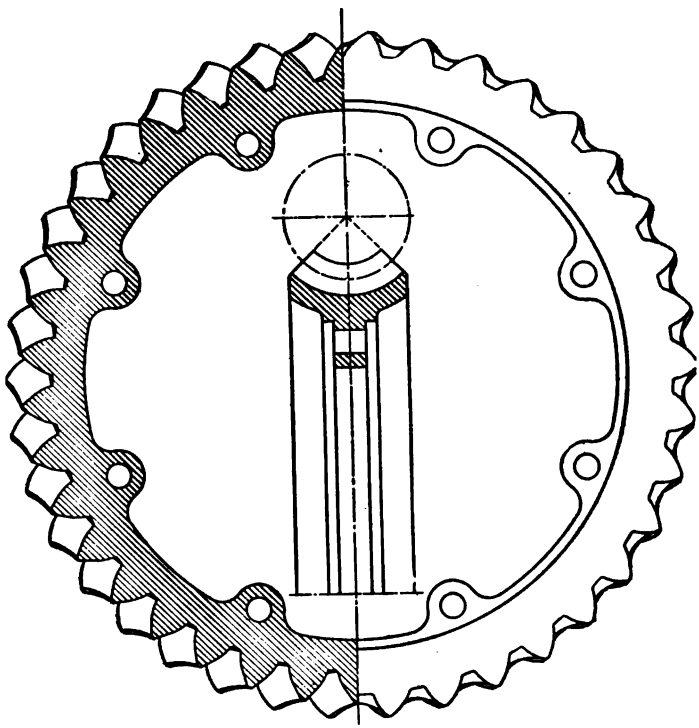

FIG. 196.—THIRTY-EIGHT TOOTH WORM WHEEL, WITH 33 DEGREES ANGLE OF LEAD AND 30 DEGREES PRESSURE ANGLE.

of the wheel is by far the greater part. The total surface area of the gear is substantially proportional to the aggregate area of the sides or flanks of its teeth, which varies directly as the wheel pitch diameter, the worm pitch diameter and the subtended angle of the wheel teeth. There is no doubt that the

capacity of a worm and gear combination increases with the subtended angle of the wheel teeth, for by successively reducing the subtended angle of any successful worm gear a point would soon be reached where the gear would fail under its load. However, as an increase in the subtended angle increases only the wheel area and that not in direct proportion, whereas the worm area is not increased at all, it is not to be expected that the capacity will increase directly as the subtended angle. It will not be wide off the mark if we assume that it increases as the square root of the subtended angle.

There is another aspect to the problem. With a given worm gear we could transmit a certain horse power either at high rubbing speed and low tooth pressure or at low rubbing speed and high tooth pressure. Within reasonable limits of speed and tooth pressure there would not be much variation in heat production. However, with the lower tooth pressure the temperature could be carried higher without danger of the oil film being broken down. This alone would result in an increase in capacity, and a further increase would result from the fact that at this higher temperature the gear would disperse more heat. Therefore, in giving a constant for capacity it will be well to limit its application to a small range of rubbing speeds. The writer finds that worm gearing for motor trucks where the rubbing speed is between 1,000 and 1,200 feet per minute is given by

$$\text{H.P.} = 0.1\ d\ D\sqrt{\phi}$$

where d is the worm pitch diameter, D the wheel pitch diameter and ϕ the angle (in degrees) subtended by the wheel teeth.

Another rule for the capacity of worm gears, due to F. W. Lanchester, is one long ton per square inch of projected worm tooth area. Mr. Lanchester says that his worm gear will transmit a load corresponding to such a pressure for an indefinite period. Now, a worm gear for automobile transmission must evidently have a transmitting capacity enabling it to support pressures considerably greater than that corresponding to full engine power on the direct drive for sometimes the full engine power will be developed on the low gear or the reverse. This latter condition, however, generally does not last for any length of time, hence it is not necessary that the gear should be capable of supporting the full engine power transmitted through the low gear indefinitely. In truck transmissions the usual al-

lowance is 1,200-1,400 lbs. per square inch of projected tooth area in contact, based on full engine power on the direct drive. If d be the pitch diameter of the worm, the outside diameter is $d + 2p_a/\pi$ and the bottom working diameter $d - 2p_a/\pi$; and if the angle of worm contact be ϕ, then the projected area of worm contact is

FIG. 197.—SHADOW VIEW OF WORM WHEEL AXLE.

$$\left(d + \frac{2\,p_a}{\pi}\right)^2 - \left(d - \frac{2\,p_a}{\pi}\right)^2 \times \frac{\pi}{4} \times \frac{\phi}{360} = \frac{d\,p_a\,\phi}{180} \text{ square inches.}$$

Efficiency Tests of Worm Gears.—Several series of efficiency tests have been carried out on worm gears for automo-

bile drives. One of the earliest extensive tests reported was made by the H. H. Franklin Mfg. Co., and showed efficiencies of 88-89 per cent. at worm speeds of 1,200 and 1,500 r.p.m. over an output range from 8 to 20 h.p. This is a rather low efficiency, but it must be remembered that these tests were made at a rather early period and the fact that the Franklin Company discontinued the worm drive would seem to warrant the assumption that the gears were not particularly good examples of the art of worm gear cutting.

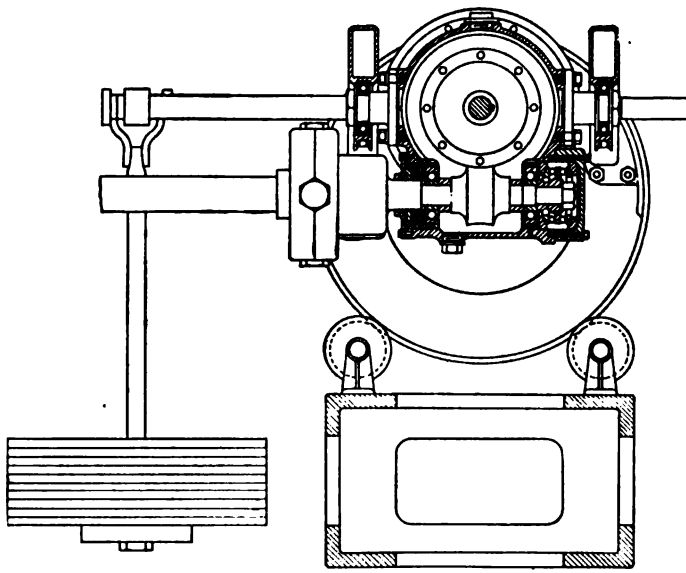

FIG. 198.—LANCHESTER WORM GEAR TESTING MACHINE.

In 1912 several series of tests of Lanchester worm gears were made by the National Physical Laboratory of England for the Daimler Motor Company on a special testing machine designed by Mr. Lanchester. This machine is based on a principle similar to that of the electric cradle dynamometer. It has been repeatedly pointed out that the rear axle housing tends to turn in the direction opposite to that of the axle shafts, with a torque exactly equal to that of the axle shafts. Therefore, by mounting the rear axle housing in ball bearing supports and holding it from rotation by means of a weight on an

arm secured to the housing, we have a measure of the rear axle torque. If the axle is worm driven, the housing also has a tendency to turn in a plane perpendicular to the worm axis in the direction opposite to that of the worm shaft, with a torque equal to that of the worm shaft. Lanchester, therefore, gives his worm gear housing such a support that it may rock in two vertical planes at right angles to each other. He then measures the torque on the propeller shaft and on the axle shaft, respectively, by balancing the housing in both planes. This he does by means of a single weight suspended from a knife edge parallel with and at a given distance from the axle shaft axis.

If we denote the torque on the worm shaft by t, that on the axle shafts by T and the worm gear reduction ratio by r, then if there were no loss in the gear we would have

$$t\,r = T$$

As a matter of fact T is always less than $t\,r$, and the efficiency is measured by the ratio $T/t\,r$.

The testing machine comprises a cradle consisting of two wheels coupled by bridges. The cradle is supported by four ball-bearing rollers and power is transmitted to the worm and from the rear hub universal jointed shafts, the joints being of the ball bearing type. A balance arm is fixed to one side of the case parallel to the worm shaft. At the end of this arm there is a transverse knife edge arm on which a weight is suspended by means of a rod. The weight can be slid along the transverse arm by means of a finger wheel, and its distance from the axis of suspension can be read off on a dial.

The gear box is supported from the cradle on ball bearings in such a way that the axis of the worm intersects the axis of the cradle wheels. When the worm gear housing is in equilibrium the contact point of the knife edge is located in the plane of the two axes of rotation. In operation the finger wheel is adjusted until the gear box is in equilibrium. Then, as the same weight is used to measure the torque around each axis of support, the torques are proportional to the distances of the point of knife edge contact from the two axes of support, respectively. We found that

$$e = \frac{T}{t\,r} = \frac{T}{t} \times \frac{1}{r},$$

and since

$$\frac{T}{t} = \frac{O\,A}{A\,B} \text{ (see Fig. 199)}$$

$$e = \frac{OA}{AB} \times \frac{1}{r}$$

In order to be able to make efficiency tests of large worm gears with a small expenditure of energy, Lanchester connects his driven shaft (or axle shaft), through a step-up bevel gear set and a belt to the worm shaft, the step-up ratio being slightly greater than the reduction of the worm and worm wheel, so that the belt always slips slightly. As a result only the power lost in the worm gear, bevel gear and in belt slip needs to be supplied from an outside source. The belt tension is adjusted until the weight hung from the knife edge is lifted and when midway between stops the arm is locked in position. Readings are then taken, and afterwards the arm is released to see whether the torque has changed. Slight changes in torque do not affect the efficiency, consequently it is not necessary to constantly adjust the weight.

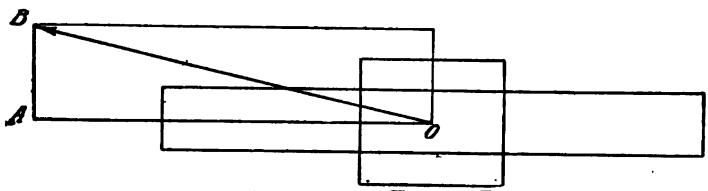

FIG. 199.—DIAGRAM OF TORQUE BALANCE.

The chief results of the National Physical Laboratory tests on Lanchester worm gears are summarized in the following tables, only the readings and calculated results for the highest and the lowest speed in each series being given:

8:33 WORM GEAR

Worm Speed R.P.M.	Calculated H.P.	Efficiency P.C.	Torque on Driven Shaft Lbs.-Ft.	Pressure on Thread Lbs.
1542	31.9	95.4	449	1205
383	7.9	93.9	449	1205
1532	45.6	95.7	645	1733
408	12.1	94.0	645	1733
1532	59.4	95.8	841	2258
403	15.6	93.8	841	2258
1532	73.3	95.7	1035	2786
373	17.8	93.7	1037	2786
1497	17.5	93.5	254	682
418	4.9	93.6	254	682

		8:35 WORM GEAR		
1532	29.8	95.7	447	1200
418	8.1	94.6	447	1200
1512	42.3	96.2	643	1727
413	11.6	95.1	643	1727
1532	69.0	95.6	1035	2780
398	17.9	93.1	1035	2780
		9:34 WORM GEAR		
1532	34.5	96.0	447	1200
393	8.9	95.2	447	1200
1527	49.5	96.6	613	1727
403	13.1	95.0	613	1727
1527	79.6	96.6	1035	2780
403	21.0	95.0	1035	2780

Application of Formulae—We may now illustrate the application of the formulæ developed in the foregoing by the example of a worm gear drive for a three ton truck. Let the truck be equipped with a four cylinder 4½ x 5 inch motor (torque = 165 lbs.-ft.).

According to equation (57) the center distance must be about

$$6 + (3 \times 0.7) = 8.1 \text{ inches.}$$

The usual gear reduction for this size of truck is about 9 to 1, hence we may choose 4 and 36 teeth, at least for a trial. We then have (equation 58)

$$\frac{p}{6.2832}\left(\frac{4}{\tan \phi} + 36\right) = 8.1 \text{ inches}$$

$$\frac{4\,p}{\tan \phi} + 36\,p = 50.894$$

If we choose a lead angle of 30 degrees then

$$\frac{4\,p}{0.577} + 36\,p = 50.894$$

$$42.94\,p = 50.894$$

$$p = 1.185 \text{ inches.}$$

The worm pitch diameter will be

$$\frac{4 \times 1.185}{3.1416 \times 0.577} = 2.614 \text{ inches.}$$

The lead of the worm will be

$$2.614 \times 3.1416 \times 0.577 = 4.738 \text{ inches.}$$

The pitch diameter of the wheel will be

$$\frac{36 \times 1.185}{3.1416} = 13.579 \text{ inches}$$

and the lead of the wheel

$$\frac{13.579 \times 3.1416}{0.577} = 73.932 \text{ inches.}$$

The outside diameter of the worm will be

$$2.614 + \frac{2 \times 1.185}{3.1416} = 3.368$$

The outside diameter of the wheel will be

$$13.579 + \frac{2 \times 1.185}{3.1416} = 14.333$$

The thrust load on the worm shaft will be

$$\frac{24 \times 165 \times 9}{13.579} = 2625 \text{ lbs.}$$

The thrust load on the wheel

$$\frac{24 \times 165}{2.614} = 1514 \text{ lbs.}$$

The radial load on the wheel shaft

$$1.155 \times 2625 = 3030 \text{ lbs.}$$

and the radial load on the worm shaft

$$1514\sqrt{1 + \left(\frac{0.577}{0.577}\right)} = 2140 \text{ lbs.}$$

The one thing which remains to be determined is the included angle of the wheel rim. Suppose that the 4½ x 5 inch four cylinder motor runs at 1200 r.p.m. and develops a brake mean effective pressure of 70 pounds per square inch. Then its horsepower is 33.8. Therefore (equation page 304).

$$33.8 = 0.1 \times 2.614 \times 13.579 \sqrt{\phi}$$

$$\sqrt{\phi} = 9.5$$

$$\phi = 90 \text{ degrees.}$$

Materials.—The worm is made of low carbon steel and is case hardened. The wheel is made of hard phosphor bronze. These materials are used because, owing to their hardness, they will withstand great surface pressure, and also because they may be finished to a high polish. The phosphor bronze wheel blank should be cast with plenty of finishing stock, so that all porous metal may be removed in the machining. The worm and wheel are generally cut by means of hobs. In cutting the teeth the greatest accuracy must be aimed at and the surfaces must be smoothly finished, so that there is no need for much polishing after hardening.

Hardening and Polishing of Worms.—The following rules regarding the carbonizing, quenching and polishing of worms

were given by T. Rapson in an article in *The Automobile Engineer* (London) for May, 1912:

"If the worm shafts are packed carefully in a carbonizing medium, such as bone-dust, charcoal, etc., the box is properly 'clayed up,' placed in a carbonizing furnace and kept at the proper temperature, is then removed and the worms are left to cool in the box, there will be little trouble from oxidation. They should be removed from the boxes, thoroughly brushed

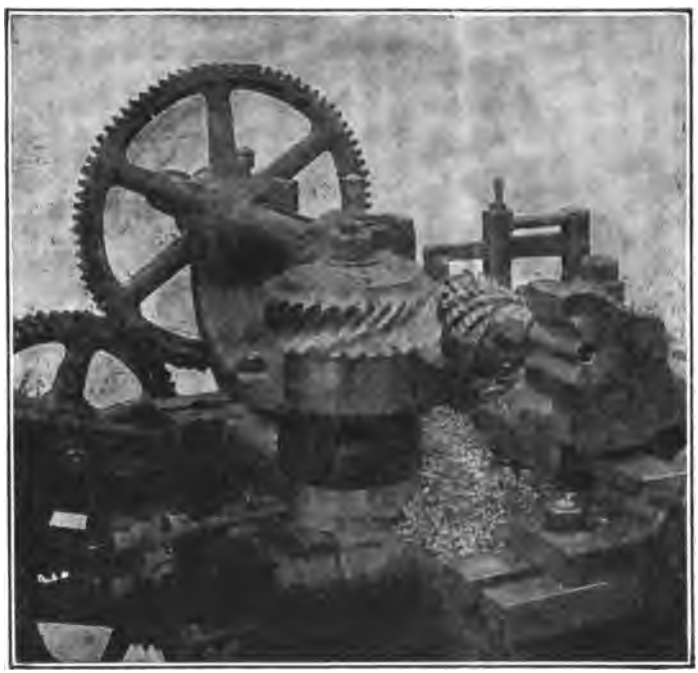

FIG. 200.—HOBBING A WORM WHEEL.
(In the shops of Henry Wallwork & Co., Ltd., Manchester, England.)

and cleaned (not with a stiff wire brush), then immersed in a bath of diluted hydrochloric and nitric acid for about five minutes, removed and washed in a soda bath, dried in sawdust, and are then ready for hardening. During the carbonizing operation all screw threads (if any), and the centres on which the worm shafts will run when being ground for the ball races, should be covered with a solution of copper sulphate, about four or five ounces to a pint of water. This will keep the places so covered

from being carbonized and allow the centres to be scraped, if necessary, after the hardening process, to ensure the worm running true before grinding for the bearings or races.

"To prevent scaling the worms during the hardening operation, a salt heating bath should be used, i. e., the worms should be heated in melted salt, which will allow them to be brought to a temperature suitable for hardening without allowing them to come in contact with oxidizing influences; also the salt forms a coating when the worms are being transferred from the bath to the quenching vat. The reader may readily try this method by obtaining a large, gannister lined plumbago crucible, putting in a quantity of barium chloride, and heating to from 700 to 750 degrees C. (roughly, about the temperature at which aluminum melts), placing a worm in the melted salt and allowing it to get to the surrounding temperature, which will take from seven to ten minutes. It must then be removed and plunged into a bath of cold water. After the worm is cold it can be dipped in a hydrochloric acid bath, which will free the barium chloride, allowing it to be washed away readily, and a soda bath, with a good drying in sawdust will leave a surface just as though it had not been heated.

'The worm is now ready for polishing and, if the beforementioned precautions have been taken in machining, carbonizing and hardening, this will be a comparatively easy matter. A most satisfactory polish may be attained by mounting an endless belt, one side of which has a section equal to the space between the worm teeth, set at the angle of the lead of the worm, the worm being mounted on dividing heads and a reciprocating table which permits its lateral and rotary movement, while the position of the belt is constant. The belt must be kept tight by a weight or spring and its section be corrected for interference, as in the case of the cutter for the thread milling machine, but in this case for an infinite diameter or straight line. It should run at a surface speed of from 6,000 to 7,000 feet per minute, and be coated with very fine abrasive. For the finishing operation the belt should be replaced by a soft cotton rope and fed with crocus and oil."

Hindley Worm Gear.—All worm wheels are "throated"—that is, the face of the gears, instead of being turned off straight, is turned to an arc of a circle of a radius slightly greater than the outside radius of the worm. The object, of course, is to increase the tooth contact area. It is also possible to "throat" the worm, and this form of worm is known as the Hindley. Such a worm insures increased bearing surface, and therefore is less liable to

start cutting. However, its machining involves some difficulty and it requires additional care in mounting. The ordinary straight worm must be mounted accurately in two planes; that is, the worm axis must be at a definite distance from the wheel axis, and it must also be in the median plane of the worm wheel. The Hindley or "hour glass" worm, on the other hand, must be accurately located in three planes; that is, the worm axis must be a definite distance from the wheel axis; it must be in the median plane of the worm wheel, and the median plane of the worm must include the wheel axis. In cutting a Hindley worm the cutting tool must be mounted so as to turn around a centre at a distance from the cutting edge equal to the radius of the worm wheel, and it must be fed in the direction perpendicular to the plane of rotation of the worm.

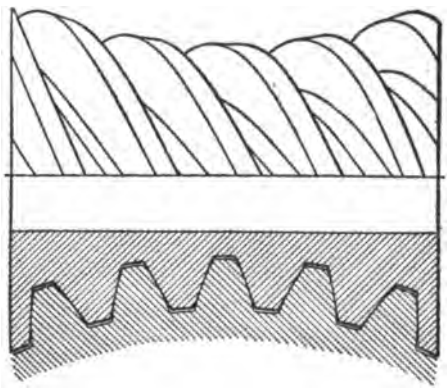

FIG. 201.—HINDLEY TYPE WORM.

(Purposely shown longer than made in practice, to bring out "hour glass" effect more clearly.)

The majority of worm drives in England seem to employ straight worms, but the Lanchester worm, which is used on several foreign makes of cars and is being introduced in this country, is of the Hindley type. When proper manufacturing equipment is available the manufacturing difficulties vanish, and there remains only the greater difficulty involved in properly mounting the Hindley worm to balance the advantage of a lower unit tooth pressure. The Hindley worm is made shorter than the straight worm, usually between one-fifth and one-quarter the wheel diameter.

Location of Worm Relative to Wheel.—As already pointed out, there are two possible arrangements of the worm and wheel combination, viz., with the worm at the bottom and at the top of the wheel respectively. As far as the operation of the worm gear is concerned, the former is the preferable arrangement, because with it the worm is always submerged in oil, as is that portion of the wheel whose teeth are at the moment meshing with those of the worm. The heat developed by the friction at the tooth contact has to be transmitted to the casing largely through the oil bath, and when the worm is at the bottom the path

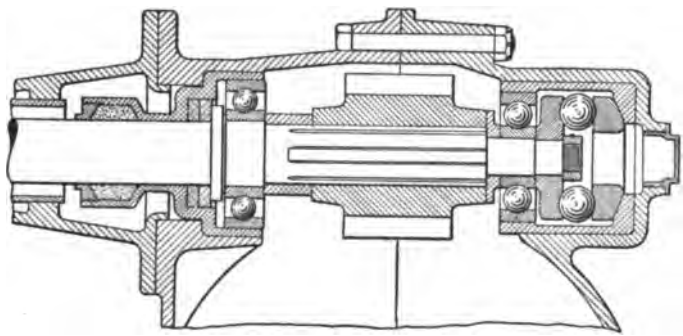

FIG. 202.—MOUNTING OF WORM WITH ONE PLAIN AND ONE BALL THRUST BEARING.

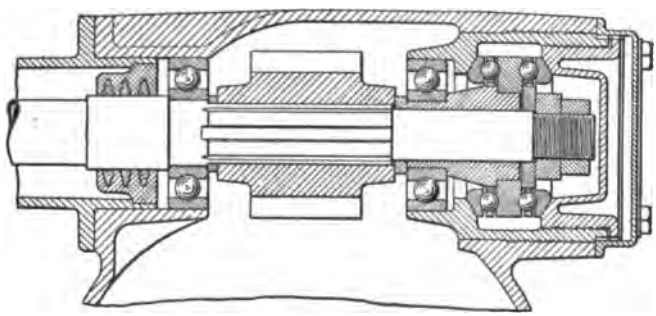

FIG. 203.—MOUNTING OF WORM WITH DOUBLE BALL THRUST BEARINGS.

for the heat to travel is shorter and more direct. However, in American practice considerations of ground clearance required practically exclude the bottom mounted worm, except on town cars. Practical experience, moreover, has shown that it is perfectly possible to properly lubricate the top-mounted worm and

to keep it cool, as at moderate and high speeds the revolving wheel throws oil over the whole interior of the driving gear housing.

Mounting of Worm.—A very heavy thrust comes on the worm shaft when the full engine load is being transmitted, and special thrust bearings must be provided. With a top-mounted worm the thrust is toward the rear when the car is being driven forward and toward the front when it is being driven backward. Since the thrust load is greater than the radial load, and must be carried by a single bearing, whereas the radial load is divided between two bearings, it is customary to use separate thrust

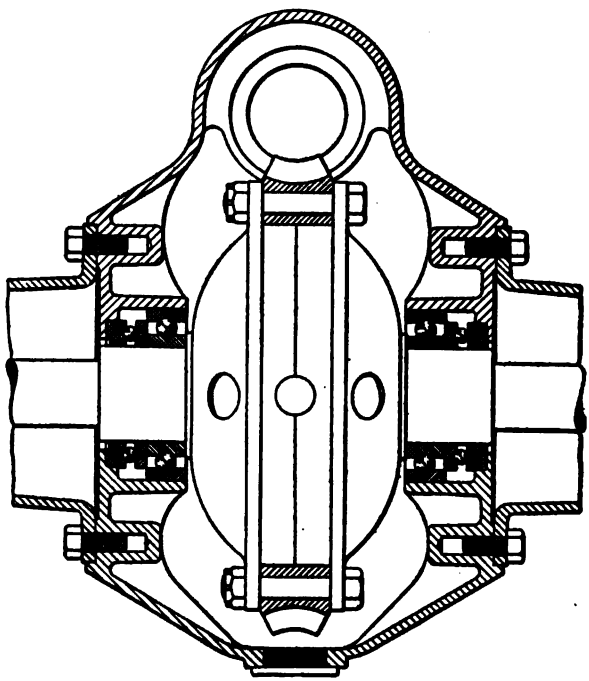

FIG. 204.—MOUNTING OF WORM DRIVEN DIFFERENTIAL.

bearings. The reverse is used only rarely, and then generally only under low power and for a short time; hence, a pair of plain thrust washers are sometimes used for it, as shown in Fig. 202, with a ball thrust bearing to take up the thrust due to forward driving. However, the more common plan is to use a double ball thrust bearing, as illustrated in Fig. 203. The

differential also has to be provided with thrust bearings for taking thrust in both directions, and in this case either a single ball thrust bearing may be mounted on either side of the differential or a double thrust bearing on one side. The usual plan is to place one thrust bearing on either side of the differential, which is illustrated in Fig. 204. As regards the sizes of bearings, the same rule can be followed as given for the differential bearings of bevel driven rear axles, viz., to use bearings of 50 to 100 per cent. greater rated load capacity than the maximum load they will have to carry with the direct drive in operation. Of all the bearings of a worm drive shaft the worm shaft thrust bearing has to carry the largest load, and it, therefore, should be made of liberal size.

Driving Gear Housings.—The driving gear housing of a worm driven axle may be divided in three planes, viz., vertically in a fore and aft plane, vertically in a transverse plane and horizontally. It may also be made in a single casting. In the Pierce-Arrow motor truck the housing is cast in a single piece, with a large gear carrier fitted to the top, as illustrated in Fig. 205. In the case of a bottom mounted worm, the casing may be cast in a single piece with a large cover on top or at an angle of 45 degrees, through the opening of which the differential may be inserted. The worm is always located in a tunnel which is bored out for the reception of the bearings, and generally the bearings at one end, at least, are larger in diameter than the worm, so that the whole worm shaft assembly can be inserted into the tunnel from that end. In some designs, however, the casing is split through the worm axis.

Undoubtedly the greatest rigidity with a given amount of material is obtained by dividing the housing vertically perpendicularly to the axis of the differential, but, unfortunately, this design is not very satisfactory from the standpoint of convenience in assembling. The gear carrier principle, when applied to the worm driven axle possesses all of the advantages that it does in connection with the bevel driven axle, accurate meshing of teeth being fully as important with the worm gear as with the bevel gear. In the United States practically all worm driven axles are designed on the gear carrier principle, which has proven absolutely satisfactory.

The torque reaction is exactly the same in a worm driven axle as in a bevel gear driven axle, and must be taken up by the same means. Also, the action of the body springs has exactly the same effect on the worm drive as on the bevel gear drive, and

the relative merits of the different axle linkages are the same for the worm drive as for the bevel gear drive. It, therefore, is unnecessary to go into the design of these parts in connection with the worm drive. The design of the axle housing with respect to strength also is the same as for a bevel gear driven axle, except that the worm drive is often used for commercial vehicles of relatively low speed in which the limiting stress on

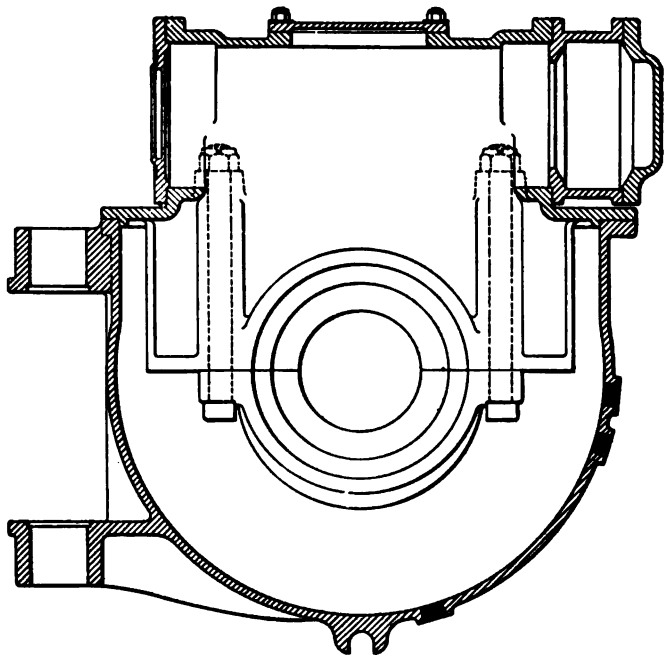

FIG. 205.—DRIVING GEAR HOUSING WITH GEAR CARRIER (PIERCE-ARROW TRUCK).

the axle housing is less. A live axle to carry a weight of several tons and to withstand the reactions due to the forces necessary to propel such a load must of necessity be of great strength. Until 1915 the majority of truck axles were dead axles, and there was some bias against live axles for heavy vehicles among designers. There seems to be no reason, however, why a live axle cannot be made strong enough to carry any load that can pos-

sibly be put onto a truck. However, every effort must be made to so arrange the design that the moments and couples are reduced to a minimum and to so distribute the metal that it works to the best advantage.

Calculation of Axle Tube Dimensions.—We saw, in connection with bevel driven live axles, that the axle housing is subjected to three different stresses, as follows: (1) The vertical bending stress due to the weight carried; (2) the horizontal bending stress due to the driving thrust of the wheels or the retarding force of the wheels in braking, and (3) the torsional stress on the axle tubes due to the application of the rear wheel brakes. Of these the first can be greatly reduced by means of an underrunning truss, and the second can be reduced and the third practically eliminated by using separate torque arms for the driving and braking torque, respectively. Two torque arms should be used for the braking torque, each close to one of the brakes, and either integral with the brake supporting bracket or pivotally secured to it. The forward ends of these torque arms should be secured to the frame in such a manner that they will transmit the forward driving thrust to the frame. The lever arm of the bending moment due to the driving thrust or braking pull is then much shorter, being equal to the distance between the centre plane of the driving wheel and the radius rod, instead of to the distance between the wheel and the point where the axle tube enters the driving gear housing. Besides, since the torque bar is directly connected to the brake support, the reaction on the brake support is transmitted directly to it and does not create any torsion in the axle tube. There are then only bending stresses on the axle tube, due to the horizontal and vertical moments, respectively.

Suppose that in a 3 ton truck the load on each rear wheel when the truck is fully loaded is 4,000 pounds. Also that the distance from the centre plane of the rear wheel to the centre of the body spring is 13 inches and the distance from the centre plane of the wheel to the centre of the radius rod 7 inches. With a coefficient of slippage of 0.6 the maximum driving force which can be exerted at the wheel rims is 2,400 pounds. Hence the maximum bending moment on the axle housing is

$$\sqrt{(4{,}000 \times 13)^2 + (2{,}400 \times 7)^2} = 54{,}600 \text{ pounds-inches.}$$

Since the moment due to the weight supported alone is 52,000 pounds-inches it is seen that the additional moment due to the wheel thrust is negligible when, as in this case, the radius rods are located close to the rear wheels. In regular operation a considerable portion of the stress on the axle housing is taken up on the axle truss rod. We will assume that the axle tube is to be funnel-shaped with flanged ends that are bolted to the driving gear housing and that an outer tube is to be forced over its smaller end, with flanges between which the spring saddle and brake support are to be held. We will assume that the outside diameter of the tube just inside the wheel bearing is 3½ inches. Then, allowing a stress of 20,000 pounds per square inch in the material of the tube we have

$$54{,}600 = \frac{20{,}000\ I}{c}$$

$$\frac{I}{c} = 2.73$$

The section modulus is

$$\frac{\frac{3.1416\ (3.5^4 - x^4)}{64}}{\frac{3.5}{2}} = \frac{150 - x^4}{35.67}$$

$$\frac{150 - x^4}{35.67} = 2.73$$

$$x^4 = 52.62$$

$$x = 2.69$$

If nickel sheet tubing is used a slightly higher stress can be allowed and the inside diameter made equal to 2¾ inches, giving a ⅜ inch wall.

A typical heavy worm gear axle, that used on the Daimler motor buses operated in London, is illustrated in Figs. 206 and 207. These buses, when laden, weigh 13,440 pounds, of which 8,960 pounds are carried on the rear axle. They are fitted with four cylinder Daimler-Knight engines of 4.6 inches bore by 4.4 inches stroke. The worm, which is of the Lanchester hour-glass type, has four leads and the wheel 29 teeth, giving a reduction of 7¼:1. The distance between the axes of worm and wheel is 7¾ inches.

It will be noticed that the axle is of the full floating type, the cast steel wheels running on the outside of the axle tube on cylin-

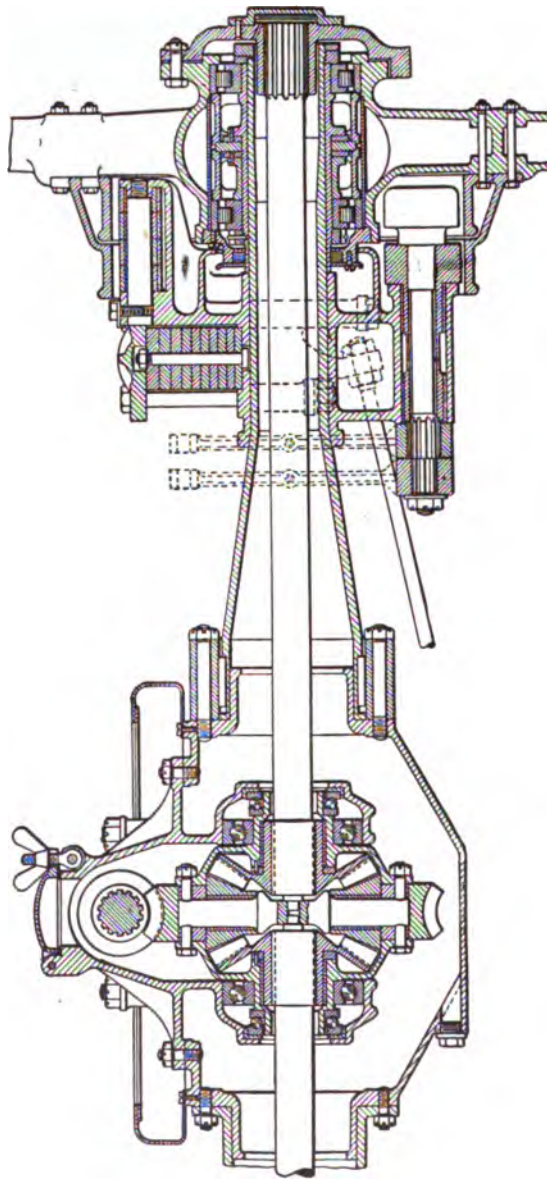

FIG. 206.—SECTION THROUGH DAIMLER WORM-DRIVEN BUS AXLE.

drical roller bearings. Connection between the axle driving shafts and the wheel hub is made by bolted on caps. The tread of the rear wheels is 69 inches and the distance between spring centres 50 inches. The rear axle shafts, which are made of high tensile nickel steel, have an effective diameter of 1¾ inches. Both ends of the driving axles, where they fit into the driving couplings, are upset.

The worm and wheel are carried by a removable gear carrier with its own radial and thrust bearings. The whole differential can be removed through the top opening after the axle shafts have first been withdrawn and to this end it is not necessary to first remove the bearing caps which are held by long through bolts. The differential, it will be seen, is of the two pinion type

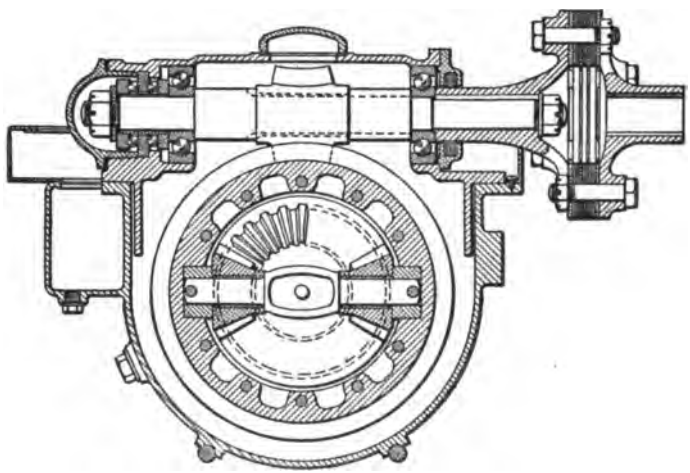

FIG. 207.—SECTION THROUGH WORM GEAR OF DAIMLER BUS AXLE.

which has also found some favor in this country on account of its economical manufacture. Brake support and spring seat are in a single casting. A notable feature is the large capacity of the central housing. There is no stuffing box inside the axle tubes so the lubricant can work right out to the hub bearings, but a packing is provided at the inner end of the wheel hub to prevent oil working onto the brake surfaces.

In American practice the housings for heavy worm-driven axles are generally made of steel castings, either in a single piece extending from hub to hub, or in three pieces with bolted joints

between the central casing and the spring seats. All three types of axles, full floating, three-quarter floating and semi-floating, are manufactured. For the latter the advantage is claimed that lateral shocks on the wheels do not impose nearly such heavy loads on the outboard bearings as in full floating axles. The Hotchkiss drive is very popular with the makers of these axles. This requires a substantial fastening of the springs to the axle, and to facilitate this, those portions of the axle housing to which the springs are secured are cast of square cross section, instead of being made round. In the case of three-quarter and full floating axles, steel tubular members are inserted into the cast housing, extending close up to the differential housing and being supported by internal flanges or bushings. These tubular members extend beyond the cast housing and carry the bearings on which the wheels are mounted. Such cast steel axles are, of course, of very considerable weight. A certain design of full floating axle for a 3½ ton truck weighs, with hubs and brake drum, 1200 pounds.

CHAPTER XI.

THE CHAIN DRIVE.

Transmission by means of chains and sprockets is now very little used on pleasure cars, but is still found on commercial vehicles. The chain possesses the advantage of a slightly greater flexibility than the shaft drive, hence it tends to protect the motor and tires against shocks due to too rapid engagement of the clutch, road shocks, etc. When kept clean, oiled and properly adjusted, the chain is a very efficient means of power transmission. The trouble with it on automobiles is that it is usually exposed, and grit soon finds its way into its numerous bearing joints, causing rapid wear. In order to keep the chain at its best operating efficiency for any length of time, it is necessary to enclose it in an oil tight case and run it in oil. The design of a light chain case which shall hold oil, not rattle and permit of ready inspection of the chains and adjustment of their tension is a rather difficult problem, and the different designs of cases evolved do not seem to be entirely satisfactory. In the centre or single chain drive, sometimes used with light pleasure cars, and particularly with friction driven cars, the difficulty of keeping an exposed chain in good working condition is especially great, since it is located directly in the path of splashing mud and water from the wheels.

Construction of Chains.—The only type of chain used for automobile propulsion is the roller chain, which is one form of the general class known as machine-made chains. The chain (Fig. 208) consists of two sets of links, inner and outer, respectively, each set of one kind being joined to two sets of the other kind by means of a bushing and a rivet for each joint. The bushing serves to hold the pair of inner links the proper distance apart, and the rivet has both of the outer links riveted to it. In passing over a sprocket the rivet turns inside the bushing through an angle which is equal to 360 degrees divided by the number of teeth in the sprocket, first in one direction

and then, as it leaves the sprocket, in the other. It is this motion of the joints which is responsible for the wear on chains, and as the motion is less the greater the number of teeth in the sprocket the advantage of using large sprockets is obvious.

The bushing is surrounded by a roller which contacts with the sprocket teeth. Hence the contact between the chain and the sprocket is a rolling contact and the sliding takes place between the bushing and roller and between the bushing and pin. The rivets are generally made of nickel steel and the bushings and rollers are hardened.

Capacity of Roller Chains.—The permissible working tension of a roller chain increases substantially as the square of the pitch, because both the pin diameter and the bushing width

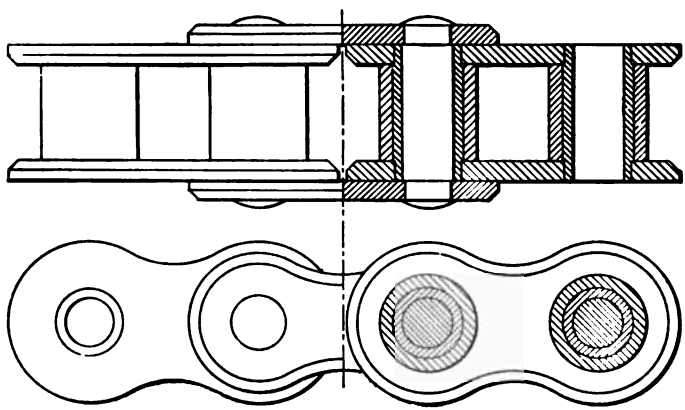

FIG. 208.—ROLLER CHAIN.

increase with the pitch, and the product of these two factors is the joint area to which the working load must be proportional. Hence, from the standpoint of strength it is advantageous to use a large pitch. On the other hand, since the diameter of the sprocket is limited by considerations of ground clearance required, the number of teeth in the sprocket is inversely proportional to the pitch, and since the angular motion at the joints is inversely proportional to the number of sprocket teeth it is directly proportional to the pitch. Hence, by increasing the pitch we reduce the unit bearing pressure, but increase the motion at the bearings. A chain of smaller pitch operates more quietly and has a longer length of life provided the tension on it is not too high. Roller chains for automobiles are commer-

cially made in pitches varying from ¾ inch to 2 inches, in ¼ inch gradations, and each pitch is made in several different widths of rolls.

The Diamond Chain and Manufacturing Company recommend the following sizes of chains for commercial vehicles of different capacities:

Tons.	Pitch, Inches.	Width, Inches.	Roller Diameter, Inches.
½	1	½	9-16
¾	1	⅝	⅝
1	1¼	⅝	⅝
1½	1¼	¾	¾
2	1½	¾	⅞
2½ and 3	1½	1	⅞
4	1¾	1	1
5 and over	2	1¼	1⅛

These are the largest sizes used in practice, and it is not uncommon to find chains several sizes smaller than those recommended on trucks of a given capacity.

In laying out a chain drive for a commercial vehicle the aim should be to make the chain speed as high as possible, because in any case the average chain speed will be moderate and the higher the chain speed the less the tension in the chain for a given horse power transmitted. The large sprocket wheel must clear the ground by about 7 inches, hence the sprocket pitch diameter must be from 15 to 16 inches less than the wheel diameter. The pitch diameter of the front sprocket then depends upon the gear reduction desired. In commercial vehicles fitted with solid tires the total reduction ratio between motor and rear wheel is generally between 6 and 9. It is customary to make the two reductions, at the bevel gear set on the countershaft and at the chains, about equal; hence the speed reduction by the chains and sprockets will vary between 2½ and 3. This gives a front sprocket with the necessary number of teeth to insure proper operation. Sprockets with less than ten teeth quickly destroy the chains. Sprockets with 12 to 13 teeth give tolerably satisfactory service, while sprockets with 15 teeth or more are most satisfactory.

Chain and Sprocket Calculations.—The pitch diameter of a sprocket for roller chains may be found by means of the following equation:

$$D_p = \frac{P}{\sin \frac{180^\circ}{N}} \qquad (59)$$

where D_p is the pitch diameter; P, the pitch of the chain, and N

the number of teeth in the sprocket. Denoting the diameter of the roller by d, the outside diameter of the sprocket blank is

$$D_p + d,$$

and the bottom diameter

$$D_p - d.$$

The distance between centres of sprockets for a certain number of links in the chain may be found by means of the equation

$$L = P \frac{Z - \frac{N}{2} - \frac{n}{2} - (N - n)\frac{\beta}{180}}{2 \cos \beta}$$

where Z is the number of links in the chain; N, the number of teeth in the large sprocket; n, the number of teeth in the small sprocket, and β, the angle made by the chain with the line of centres (see Appendix to Vol. I). This equation gives the distance required for the chain to run tight on the sprockets. A slight amount of slack is necessary and means for adjusting the distance between centres are generally provided. The distance

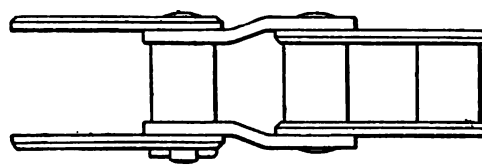

FIG. 209—OFFSET LINKS.

between centres of sprockets must not be less than one and one-half times the pitch diameter of the large sprocket. Too long chains are also objectionable because of the whipping effect if the chain is at all loose. In commercial vehicle practice the distane between sprocket centres is generally made equal to about twice the pitch diameter of the large sprocket. In fixing this distance it is preferable to figure on an even number of links, because although the use of so-called offset links (Fig. 209) permits of an odd number, this practice is objectionable.

Design of Sprocket Wheels—Sprocket wheels are made from steel plate, drop forgings or, in some instances, cast steel. The larger sprockets are practically always in the form of flat rings which are generally bolted to the brake drums. Front sprockets, on account of their smaller size, wear faster than rear sprockets and should be deeply case hardened. Front sprockets also are sometimes bolted to separate hubs, the advantages of this construction being that when a sprocket is worn out

only the steel disc need be renewed, and that a lot of sprockets can be forced over a mandrel and cut at one time. Referring to Fig. 210 the width B of the sprocket is made equal to twenty-nine thirty-seconds the width A of the chain, and the sprocket teeth are chamfered on their outer ends from the pitch line on, so as to reduce their width C on the circumference to one-half the width of the chain, the centre of the chamfering radius being located on the pitch line. The clearance D for the side links below the pitch line must be nine-sixteenths of the pitch or more. Sprocket wheels are cut by means of formed cutters, different cutters being used for wheels of the same tooth pitch but with different numbers of teeth. Care must be exercised to get the bottom diameters exactly right and that there is the proper amount of clearance between the teeth and the rollers as the chain runs onto and leaves the sprocket. In order to insure concentricity of the sprocket and its hub or centre, when the two parts are made separate, the sprocket blank should be made an accurate fit over a turned portion of the hub or centre, against the flange to which it is bolted. From four to eight bolts are used in securing the front sprocket to its centre and a relatively larger number for the rear sprocket.

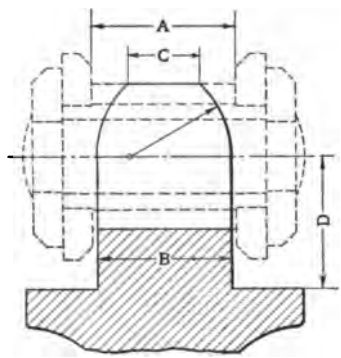

FIG. 210.—SPROCKET DIMENSIONS.

Chain Pull.—If the maximum engine torque is denoted by T, the combined speed reduction ratio of the low gear in the transmission and the bevel gear set by r, the pitch diameter of the sprocket pinion by d and the combined efficiency of the low gear and the bevel gear set by e, then the maximum chain tension is

$$t = \frac{12\ T\ r\ e}{100\ d} \qquad (60)$$

Suppose we have a three ton truck fitted with a four cylinder 4½x5 inch motor which develops a low speed torque of 165 pounds feet. Suppose the low speed reduction in the change gear is 3.2 and the reduction of the bevel gear set 3. Then, considering the efficiency of the change gear and bevel gear set together to be

90 per cent., the maximum torque on the jackshaft is

$$165 \times 3.2 \times 3 \times 0.90 = 1{,}395 \textit{ pounds-feet.}$$

The proper size of the chain to use is a 1½ inch pitch 1 inch width of roll. With a 36 inch rear wheel the limiting pitch diameter of the sprocket wheel is about 21 inches, hence we could use 45 teeth, which gives a pitch diameter of 21.49 inches, and if the total reduction from engine to rear wheels is to be, say, 9, then the chain and sprocket reduction must be 3 to 1 and the sprocket pinion must have 15 teeth. This will make the pitch diameter of the sprocket pinion

$$\frac{1.5}{\sin\left(\frac{180}{15}\right)^{\circ}} = 7.215 \textit{ inches}$$

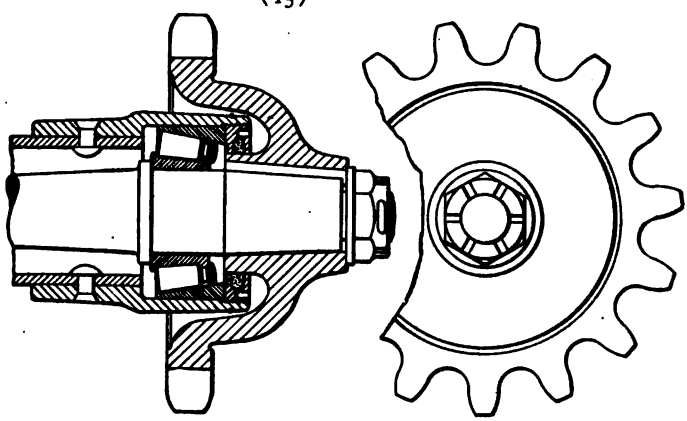

FIG. 211.—OVERHANGING SPROCKET PINION.

Hence the maximum tension in each chain would be

$$\frac{1395 \times 12}{7.215} = 2{,}321 \textit{ pounds.}$$

Such a chain has an ultimate strength of from 18,000 to 21,000 pounds, and therefore has a factor of safety of about 8 when working under full engine load on low gear.

Overhanging Sprockets—Owing to the high tension in the chain under low gear it is advantageous to place the jackshaft outboard bearing in the centre plane of the chain, which requires that the sprocket be made bell-shaped or be bolted to a bell-shaped centre. If an ordinary symmetrical type of sprocket were keyed to the jackshaft outside the bearing, the tension in the chain would impose a heavy bending moment on the shaft,

which is avoided by so arranging the sprocket and bearing that their centre planes coincide. This is illustrated in Fig. 211.

Chain Adjusting Rods—The chain adjusting rods, also known as radius rods, serve a triple purpose. They take up the reaction due to the chain pull, allow of adjusting the slack in the chain, and transmit the driving thrust or braking pull from the rear axle to the frame. These rods must be jointed at both ends so as to permit of free play of the springs, and the joint centres should preferably lie in the axes of the sprockets, so that any play of the springs will not affect the sprocket centre distances.

Fig. 212 shows a simple form of radius rod, as often fitted to light commercial vehicles. At the forward end a T-shaped fitting surrounds a cylindrical portion of the jackshaft bearing bracket or the jackshaft tube. The radius rod proper consists

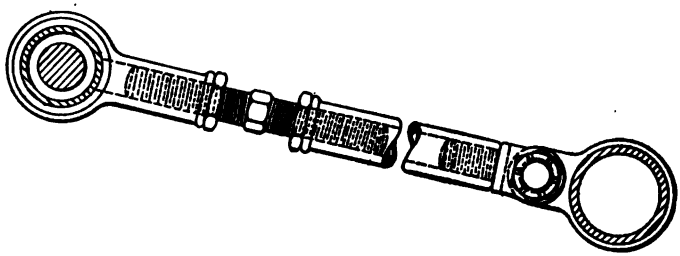

FIG. 212.—SIMLPE FORM OF RADIUS ROD.

of a tube which is threaded on the inside at both ends, having a forked connector secured into it at the rear end which connects with a lug formed integral with the brake support or spring saddle on the rear axle. The forward end of the radius rod is connected to the T fitting already referred to by means of a turnbuckle whose opposite ends are threaded right and left respectively. It is obvious that by turning this turnbuckle the distance between the two hubs at the end of the radius rod can be varied, and when the adjustment has been made the turnbuckle can be locked by means of the check nuts provided.

While the above construction serves the purpose of a radius rod in a way, it does not make proper allowance for angular motion of the rear axle with relation to the plane of the vehicle frame, as caused by road irregularities. In fact, with radius rods of this type the rear axle can move freely only in such a way that it always remains parallel to the frame. Any other motion

entails heavy strains in the rods and their connections. Besides, if the loaded truck were running on a laterally inclined road surface, or if the rear axle should receive a lateral shock, as in striking a curb as the result of a skid, the greater part of the strain would be taken up by the radius rods, and these would be likely to be injured. These lateral strains should preferably be taken by the body springs, and to this end the joints of the radius rods to the frame and rear axle, respectively, must be of the universal type.

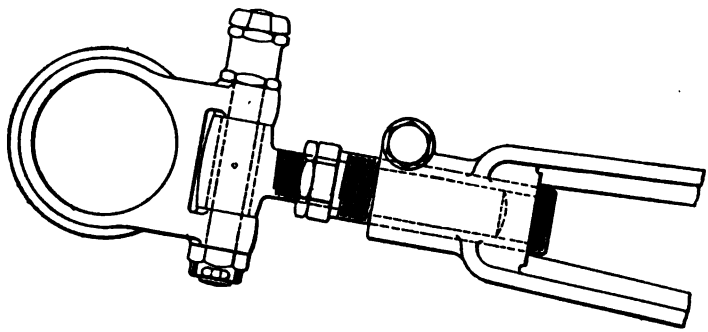

FIG. 213.—RADIUS ROD DOUBLE PIVOTAL FORWARD JOINT.

Fig. 213 shows the front end of a radius rod which has a double pivotal joint with the frame. The fitting to which the radius rod is connected swivels on the jackshaft bearing bracket or housing, and the rod has a pivotal connection with this fitting. The forward end of the rod proper is provided with a hub which is internally threaded to receive a bushing which is threaded left handedly on the outside and right handedly on the inside. The bushing receives the shank of a T-shaped connector fitting. By turning the bushing by means of a wrench the effective length of the radius rod can be increased or decreased, and after the adjustment has been made the parts can be locked in position by means of a clamp screw and check nut.

Fig. 214 illustrates a spherical joint for the forward end of a radius rod. The turnbuckle is provided with a head whose upper and under faces are turned spherically. The upper face of the head bears against the spherical head of a steel button inserted into a drill hole in the wall of the fitting on the jackshaft bearing bracket, and against the under face of the head

presses an externally threaded ring screwed into a threaded recess in a boss formed on the fitting, which ring is also provided with a spherical surface. After adjustment has been made, the nut can be locked in position by means of a clamp screw, and the same locking means is employed for the threaded shank of the turnbuckle.

The joint of the radius rod to the rear axle may also be of either the double pivotal or spherical type. The former is illustrated in Fig. 215. A lug is formed on the hub of the brake support which is swiveled on the rear axle, and the rear end of the radius rod is connected to this lug by means of a pin which is held in position either by means of a bolt head and nut or a locking pin, as shown in the illustration. A spherical joint for the rear end of a radius rod is shown in Fig. 216. One-half of

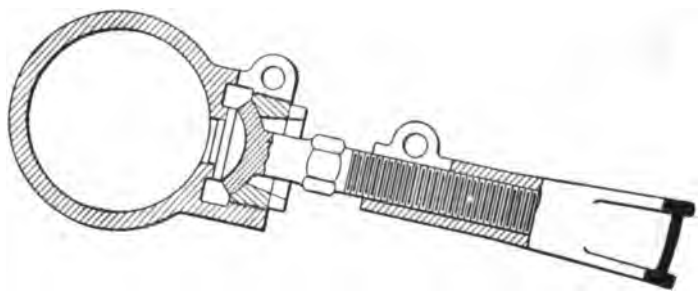

FIG. 214.—RADIUS ROD SPHERICAL FORWARD JOINT.

the socket is formed in the spring saddle, and the other half in a fitting which is bolted to the spring saddle. The ball is provided with a threaded shank, which is screwed into the tubular rod and secured by a lock nut.

In Fig. 217 is shown a spring cushioned radius rod as used on the Büssing motor trucks made in Brunswick, Germany. The rear end of the radius rod is connected to the brake support and the forward end is made telescoping and surrounded by a volute spring. It is obvious that in case of a sudden increase in the chain pull, as in letting the clutch in too quickly, the volute spring will compress and the radius rod shorten, thus cushioning the drive.

When a spherical type of joint is used at the rear end of the radius rod, it is not convenient to use the latter as a torque member to take up the brake reaction. In that case the brake reaction has to be taken up by the body springs by connection of

the brake support with the spring seat, or the brake support may be linked to the vehicle frame.

Calculation of Radius Rods—The radius rods act as compression members or columns, and their dimensions should be calculated accordingly. The maximum chain tension can be calculated by the method already explained (Equation 60). Besides this, the rods must transmit the propelling thrust from the rear axle to the frame. This propelling thrust can be figured on the basis of 15 per cent. of the weight of the vehicle on the two rods, for extreme cases. But since the rod makes an angle with the frame, the thrust in the direction of the rod is greater than the propelling thrust, in the ratio of unity to the cosine of this angle.

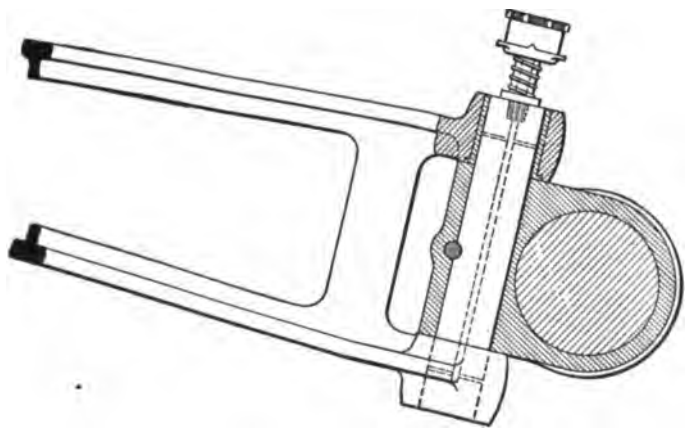

FIG. 215.—RADIUS ROD DOUBLE PIVOTAL REAR JOINT.

Thus, in the case of our 3 ton truck we found that the maximum chain tension was 2,321 pounds. The maximum propelling thrust on each side is 975 pounds, the weight of truck and load being 13,000 lbs. Assuming that in the full load position of the spring the radius rods make an angle of 20 degrees with the frame, the thrust along them will be

$$\frac{975}{0.94} = 1{,}040 \textit{ pounds},$$

and the total pressure on each of the radius rods,

$$2321 + 1040 = 3361 \text{ pounds}.$$

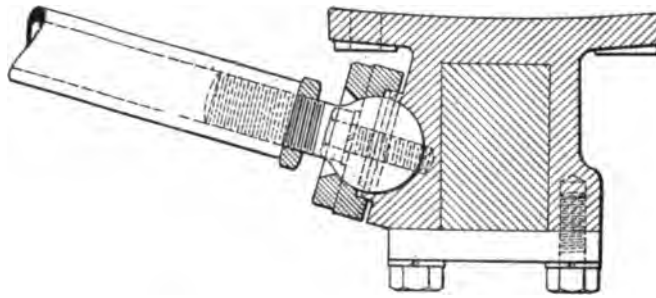

FIG. 216.—RADIUS ROD SPHERICAL REAR JOINT.

The necessary section can be determined by means of the equation

$$S = \frac{P}{A}\left(1 + \frac{4}{25{,}000}\frac{l^2}{r^2}\right)$$

(Rankine's equation for steel columns free at both ends). In this equation S is the unit compression stress; P, the total pressure on the column; A, the cross sectional area; r, the least radius of gyration of the section, and l the length of the rod or column. In order to use this formula it is necessary to assume a section and determine the value of the stress S, and if this figures out either too high or too low, to make a new assumption.

Let us assume that the centre to centre distance of the radius rod in the 3 ton truck is 40 inches; that the rod is to be tubular,

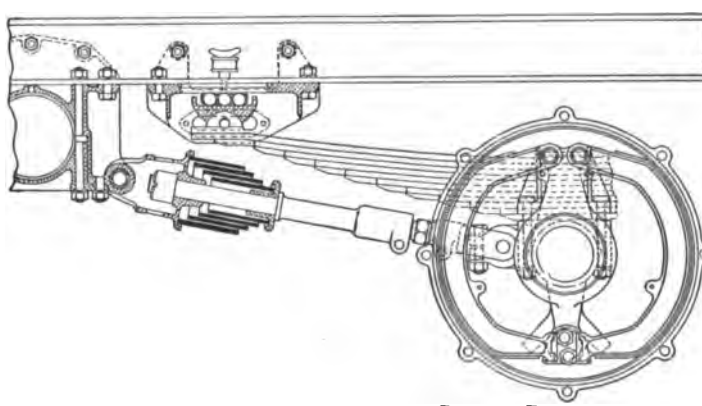

FIG. 217.—CUSHIONED RADIUS ROD.

of 1¼ inches outside and ⅞ inch inside diameter. Then

$$A = 0.6 \text{ square inch},$$
$$I = 0.097,$$
$$r^2 = 0.151,$$

and the unit stress

$$S = \frac{3.361}{0.6}\left(1 + \frac{4}{25{,}000} \cdot \frac{1{,}600}{0.151}\right) = 15{,}100 \times \textit{pounds per sq. in.}$$

Assuming the outside diameter to be 1½ inches and the inside 1 inch, the unit stress figures out to about 7,000 pounds per square inch. With these figures and a table of standard tube sizes a suitable tube can easily be selected, since the stress can be allowed to reach a value of 12,000 to 15,000 pounds per square inch. Of course, if the tube is threaded on the inside the dimension at the bottom of the thread must be taken for the effective inside diameter of the tube.

Many radius rods serve also as brake torsion members, and these should also be calculated as to the torsional strains produced in them, which can be done by the same method as used for calculating the torque rod of bevel and worm driven axles. Such radius rods are generally made of I section, often with parts of the web left out, and for commercial vehicles they are mostly made of cast steel.

In designing radius rods, the designer should look to it that the adjusting members are readily accessible. Means must be provided for taking up all play between adjusting members, as else the joints will be quickly worn out by the shocks of the drive. Grease cups msut be provided for all bearings, even those having but a very slight motion.

Effect of Spring Play on Chain Drive—In Fig. 218 is shown a chain drive in diagram in two different positions, the springs being assumed to be distended and compressed, respectively. The sprocket pinion is supposed to have fifteen teeth, and the sprocket wheel forty-five. The distance between centres is assumed to be 28 inches, and the total vertical motion of the springs 6 inches. By using these figures a direct comparison with the bevel gear drive is possible, although in one respect this comparison is not on the proper basis, since the propeller shaft of a shaft driven car is nearly always made considerably longer than the radius rod of an equivalent chain driven car. We will assume, as in the case of the bevel gear drive, that when the springs are compressed the line of centres is horizontal. Then when the springs distend, the line of centres moves through an angle a determined by the relation

$$\sin \alpha = \frac{6}{28}$$

Referring to Fig. 218, a portion of the chain whose length is

$$AB = \frac{\pi D \alpha}{360} \text{ inches}$$

winds up on the sprocket wheel and a portion whose length is

$$CD = \frac{\pi d \alpha}{360} \text{ inches}$$

unwinds from the sprocket pinion. The length of chain between the extreme points of contact on the two sprockets (EB, CA) remains the same. Since the length of chain which unwinds from the pinion is not equal to that which winds up on the

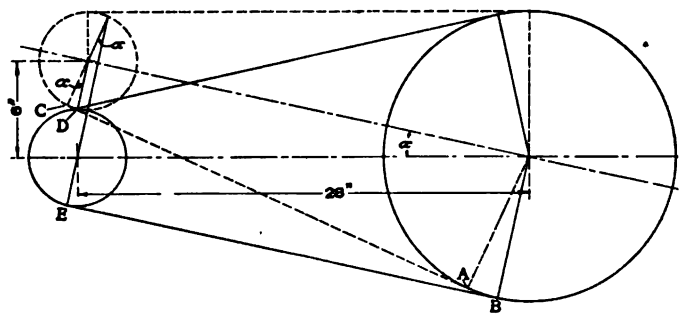

FIG. 218.—DIAGRAM ILLUSTRATING EFFECT OF SPRING ACTION ON CHAIN DRIVE.

wheel, if we assume that the wheel remains stationary the sprocket must turn to unwind a length of chain

$$AB - CD = \frac{\pi (D - d) \alpha}{360} \text{ inches.}$$

It must turn in the forward direction when the springs distend and in the backward direction when they compress.

A motion of

$$\frac{\pi (D - d) \alpha}{360} \text{ inches}$$

on the circumference of the sprocket pinion corresponds to an angular motion

$$\theta = \frac{D - d}{d} \alpha \text{ degrees.}$$

It will be seen from this that when $D = d$—that is, when the two sprockets are of the same size—the spring action has abso-

lutely no effect on the drive, and the effect is the less the smaller the difference in the sizes of the two sprockets. In the case of our example, since D is substantially equal to 18 inches and d to 6 inches, and $a = 12° 21'$, the angular motion of the sprocket pinion corresponding to a spring play of 6 inches is

$$\left(\frac{18 - 6}{6}\right) 12° 21' = 24° 42'$$

This is considerably less than the angular motion found for the case of the bevel gear drive with single universal joint, viz., 37° 30'.

The above analysis brings out another reason for making the reduction ratio in the chain drive as small as possible.

Chain Cases.—Chain cases are made of sheet steel, cast steel or cast aluminum. A design of chain case intended for a high grade pleasure car is illustrated in Fig. 219. The housing is made in two main parts. The upper part is clamped and bolted to the radius rod and the lower part is hinged to the upper part, the hinge being at the rear end. The parts overlap at the dividing line so as to insure a substantially oil-tight joint. In the outer side of the case circular openings are left which are large enough for the sprockets to pass through. The opening for the front sprocket is closed by a bowl-shaped piece of sheet metal with double rim which is held in place by being clamped between the two parts of the case, whereas the opening for the rear sprocket is closed by a ring bolted to one of the parts and making a tight joint with the brake drum by means of a felt ring in a suitably formed groove. There is an inspection hole in the upper part which is closed by a hinge cover. It is located near the front sprocket where access to it is not interfered with by the driving wheel.

The radius rod has a long bearing on the axle, and, of course, is rigid in the transverse direction. The upper part of the case is securely fastened to the rod at various points of its length. Near its forward end the radius rod forms a loop spanning the jackshaft bearing bracket. The bearing bracket is surrounded by a yoke made in halves riveted together, with guiding shanks extending in the direction of the rod. One of these shanks is surrounded by a sleeve having a threaded seat in the end of the rod. In order to get the yoke and the threaded sleeve into place the two bearings for these parts in the radius rod have to be made with separate caps.

A form of cast steel chain case is illustrated in Fig. 220. It

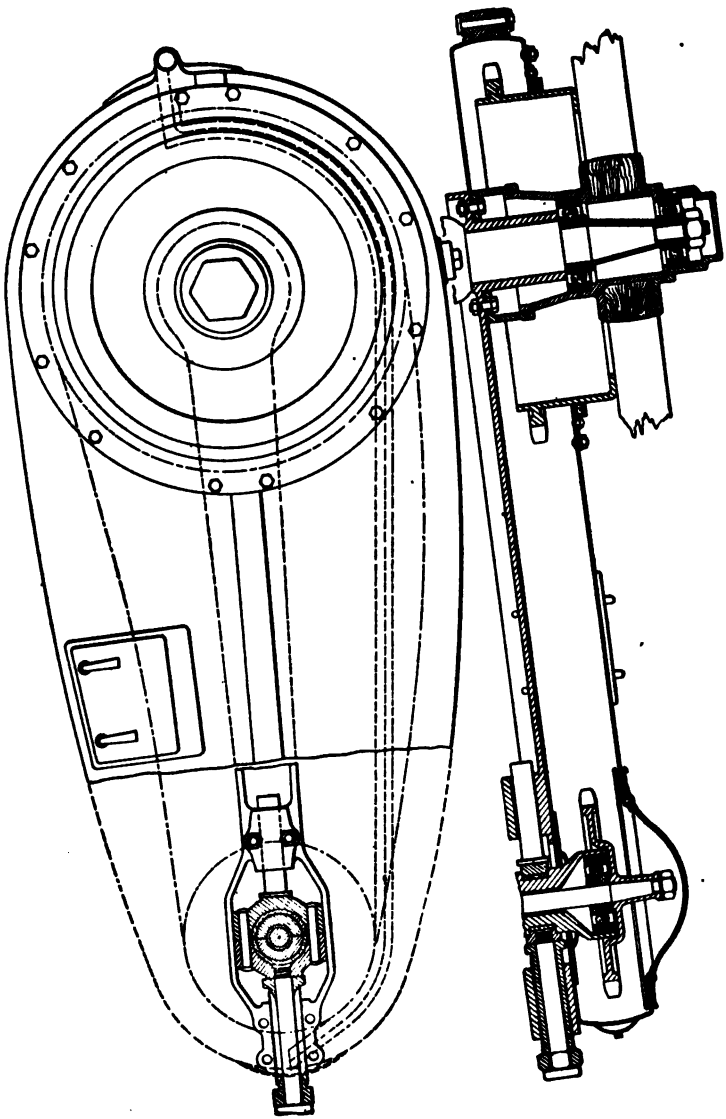

FIG. 219.—SHEET METAL CHAIN CASE.

is made in quarters, as shown, and bolted together. The case also serves as a radius rod and brake support and is strengthened for these purposes by ribs and bosses suitably located. The chain tension is adjusted by means of an eccentric plate surrounding the bearing housing and secured to the casing by means of cap screws. The joint between the eccentric plate and the bearing housing is of the ball and socket type, so as to avoid straining the case.

A similar adjustment has been proposed in which a single

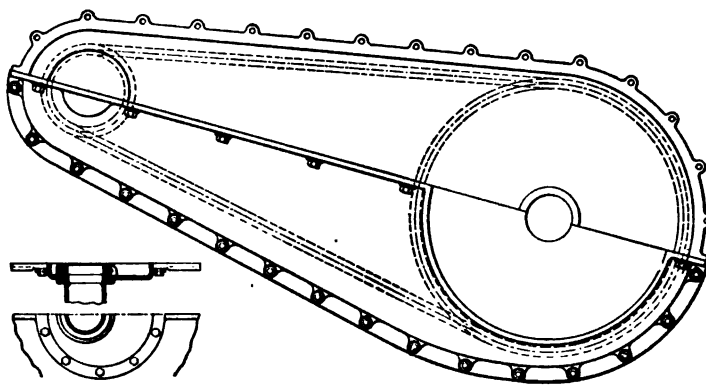

FIG. 220.—CAST STEEL CHAIN CASE.

eccentric is used with worm wheel teeth cut on its circumference, with which mesh the teeth of a worm journaled in the walls of the case. Both the eccentric and the worm and worm wheel being self-locking, no special locking device is required.

Another possible method of chain adjustment in connection with a case consists in placing a square bearing block around the end of the jackshaft tube, sliding in a rectangular groove in the case and adjusted either by opposite set screws through lugs on the case or by screw wedges back of the bearing block.

Owing to the difficulties encountered in devising chain adjusting means in connection with chain cases, it is desirable to make the range of adjustment as small as permissible. It must be possible to adjust the centre distance enough to vary the chain length one complete pitch. This necessitates a change in the centre distance of substantially one-half a pitch.

Dead Rear Axles.—Dead rear axles are made of square,

rectangular or circular cross section, the rectangular section predominating in recent designs. By far the greatest strain on the axle results from the vertical bending moment due to the load on the springs, and therefore it is not to be wondered at that a section is employed which provides greater vertical than horizontal strength. The ratio of the height of the section to its width varies from about 1½ to 1¾. In calculating the necessary section of the axle a stress of 15,000 pounds per square inch can be allowed for hammered medium carbon steel. Some manufacturers allow 20,000 pounds, but the lower figure is better. Thus, let L be the load supported by one driving wheel when the car is fully loaded; l, the distance of the spring centre from the wheel centre; b, the width of the axle section, d its height, and r the ratio of d to b. Then the bending moment on the axle is $L\,l$ and the resisting moment is

$$\frac{d^3\,S}{6\,r}$$

Hence

$$Ll=\frac{d^3\,S}{6r}$$

and

$$d=\sqrt[3]{\frac{6\,L\,l\,r}{S}} \qquad (61)$$

Having found the height of the section the width is found by merely dividing by the assumed ratio r.

Some manufacturers forge the spring seats integral with the

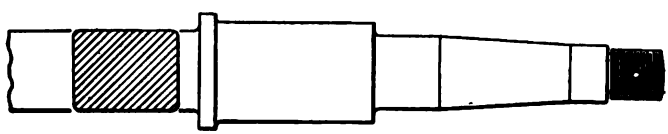

FIG. 221.—DEAD REAR AXLE

axle, while others make them separate. Beyond the spring seat the axle is made of round section to form a seat for the radius rod. In some cases, owing to lack of space between the sprocket wheel and spring, the radius rod is placed on the inside of the spring. However, the more common and the preferable arrangement is to place the rod close to the chain, so that the bending moments of the chain pull may be kept as low as possible. That section of the axle which serves as seat for the radius rod or brake support is always limited by a flange at the inner end, and

sometimes also at the outer end, in which latter case the radius rod, etc., must be made with a separate cap. Beyond this portion comes the axle spindle which usually has seats for two antifriction bearings of different size, and at the end a threaded portion over which screws a nut which holds the inner races of both bearings in place, a spacer being placed between the two inner races. A typical rear axle is illustrated in Fig. 221.

The Jackshaft—In the earlier cars with side chain drive the bevel gear set and differential on the jackshaft were usually enclosed in the rear part of the change gear box, and Oldham couplings were inserted in the two halves of the jackshaft. However, it has now become the common practice to make the jackshaft of the same general form as a bevel gear driven rear axle,

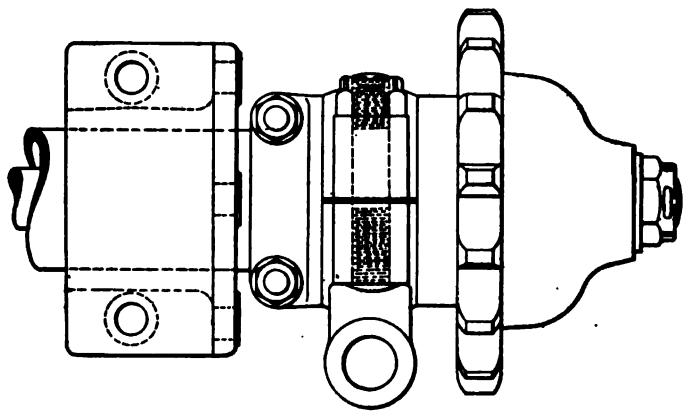

FIG. 222.—JACKSHAFT END AND SUPPORT.

using either a pressed steel or built-up housing which extends across the frame and is supported from the frame side members. The change gear case can either be bolted to the rear axle housing, it can be placed somewhere between the engine and the jackshaft, or it can be combined with the engine into a unit power plant. The first arrangement is the most common. The same as the rear axle, the jackshaft may be made either full floating or semi-floating; that is, the outboard bearings may be placed either inside a bearing housing secured to the end of the jackshaft tube, or they may be placed on the outside of the tube. Fig. 222 shows a typical design of a jackshaft end, including the bearing bracket, bearing housing, radius rod end and sprocket pinion.

CHAPTER XII.

BEVEL-SPUR GEAR, INTERNAL GEAR AND FOUR-WHEEL DRIVES.

There are three forms of double reduction drives, each comprising one pair of bevel gears to effect the right-angled transmission between the longitudinal propeller shaft or drive shaft and a transverse shaft. The other reduction may be obtained either by means of chains and sprockets, a pair of spur gears or a pair of spur pinions and internal gears. Chain drive was at one time very common for motor trucks and other commercial vehicles, but has lost much ground. The bevel and spur gear drive has been used by Renault in France and by several manufacturers in England, especially on so-called subsidy models, the subsidy regulations barring the worm drive. In this country it is used by the Autocar Company. The internal gear drive also had its first extensive application abroad, but has now found quite a following in this country.

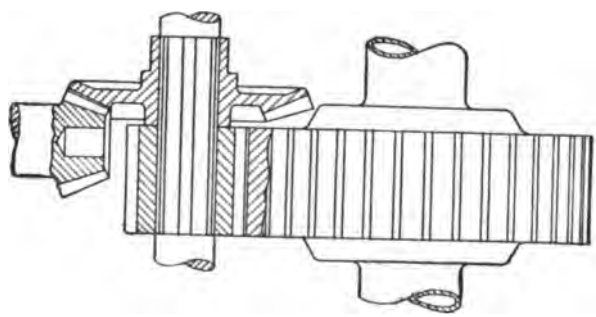

FIG. 223.—DIAGRAM OF BEVEL-SPUR DRIVE.

In a bevel and spur gear drive the whole of the gearing is enclosed in a single case at the middle of the rear axle. As shown in the diagram of a bevel spur drive, Fig. 223, the power is first transmitted through the bevels, because the end thrust

on the bevel gear is then much less and can be more readily provided for. Large bevel gears also are more expensive to produce than equivalent spur gears, and this is probably another reason why the power is transmitted through the bevel gear set first. The greater part of the reduction is obtained by means of the spur wheels, because the spur gear is concentric with the axle and can be of considerable diameter without interfering with anything. While it would be possible to have the shaft carrying the bevel gear and the spur pinion in the same horizontal plane as the rear axle axis, it is generally placed considerably higher. In most designs the axes of the spur pinion and gear lie in an inclined plane, the pinion axis being generally forward, sometimes to the rear of the gear axis, but where space permits the pinion may be directly above the gear. The gear carrier principle, so successfully employed on worm and bevel gear-driven rear axles, has also been applied to the spur gear-driven axle. In one or two English designs the differential gear

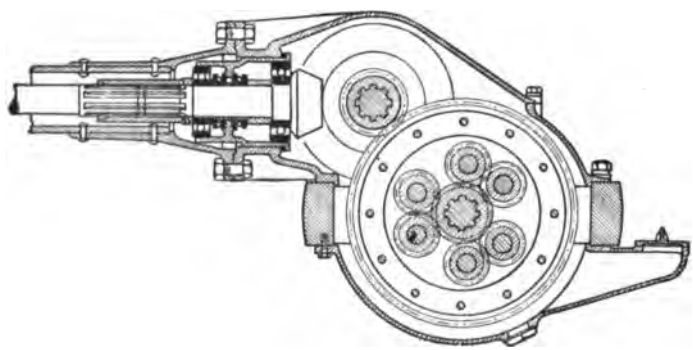

FIG. 224.—KARRIER BEVEL-SPUR DRIVE.

is mounted on the intermediate shaft and the power is transmitted to the rear axle shafts by two pairs of spur wheels. This has the advantage that a smaller differential gear will do, but the disadvantage that two pairs of spur wheels are necessary goes a long way toward nullifying it.

Arrangement of Gear Relative to Axle—In England, where the bevel-spur drive has seen its widest application, it is used chiefly in connection with drop-forged axle housings of the so-called banjo type. Owing to the irregular shape of the gear

housing it is something of a problem to properly combine the axle and gear housings, and various solutions of this problem have been evolved. Thus the Karrier Company places the central ring of the axle housing horizontally, as shown in Fig. 224. A top gear carrier and a bottom housing are secured to the axle forging by screws. This makes a neat and handy construction, but has the disadvantage that the material in the ring is not very favorably disposed to support vertical bending stresses. To make up for this, an unusual amount of material must be put into the ring, as may be seen from the drawing. In the Pagefield axle, shown in Fig. 225, the ring of the axle housing is placed vertically, and this axle has the somewhat unusual feature that the bevel gear and spur pinion are located to the rear of the axle, the bear-

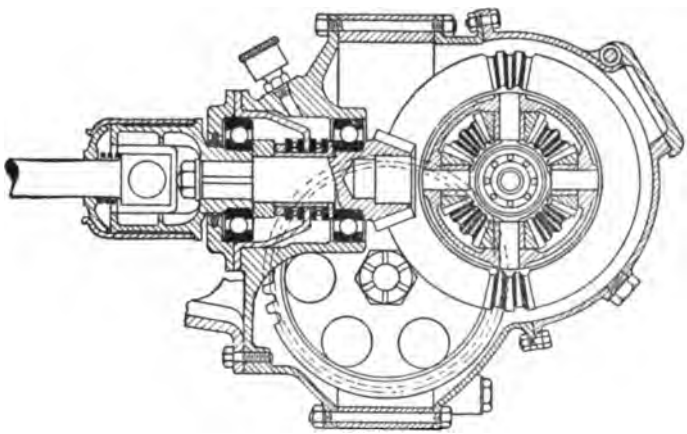

FIG. 225.—PAGEFIELD BEVEL-SPUR DRIVE

ings for the shaft on which these two gears are mounted being supported in the rear cover, while the bearings of the bevel pinion shaft are in the front cover. The "ring" of the axle housing in this case is not symmetrical about the axis of the axle, extending higher above the axis than below it. In order to combine the advantages of the two constructions above described, the Wolseley Motor Car Company places the ring of the axle housing at an angle, the upper part being tipped backward (Fig. 226). This permits of the use of a symmetrical axle forging and of a gear carrier supporting all of the gears of the drive, so that the latter can be assembled and tested before it is assembled with the axle housing. It will be observed from

the drawing that the inclination of the ring toward the vertical is not great, and not much strength is sacrificed.

Calculation of Spur Gear Drive—The spur gear on the rear axle is made of as large a diameter as consideration of ground clearance required will permit. The pitch diameter will vary roughly from about 10 inches in a 1-ton truck to 15 inches in a 5-ton vehicle. For trucks of 3 tons' load capacity and over, 4 diametral pitch teeth may be used for the spur gears and 5 diametral pitch for the bevel gears, while for lighter vehicles the spur gears may be of 5 diametral pitch and the bevels of 6. As regards materials, the same steels as used for bevel gears

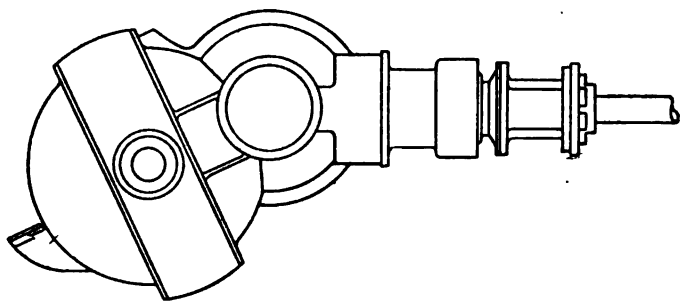

FIG. 226.—WOLSELEY BEVEL-SPUR DRIVE AXLE.

will give satisfaction, that is, low carbon nickel or chrome nickel steel, case hardened, or a medium carbon chrome nickel steel, oil hardened. The spur wheel, if desired, can be made of medium carbon steel, heat treated, as it is naturally stronger and subjected to much less wear than the pinion. In calculating the necessary width of face of the spur pinion and gear the Lewis formula can be used, allowing a stress of 16,000 pounds per square inch in the teeth when the engine drives direct and develops its full torque. This may seem to give an excessive stress in the teeth when the engine drives through the low gear at full load, but it must always be remembered that the Lewis formula gives a considerably higher stress than actually occurs.

For the bevel gear teeth the stress may be taken somewhat lower, say, 14,000 pounds per square inch, because of the higher pitch line velocity at which these gears run. It may be well to illustrate the application of these rules by a practical example.

We will assume that a three-ton truck is to be fitted with a four-cylinder 4¼ x 5¼-inch motor, with a gear reduction of 8:1. Figuring on a maximum brake m.e.p. of 85 lbs. p. sq. in. the engine torque is

$$\frac{4 \times 5\frac{1}{4} \times 4\frac{1}{4} \times 4\frac{1}{4} \times 85}{192} = 168 \text{ lbs.-ft.}$$

Let us assume that the layout shows that the pitch diameter of the spur wheel can be about 13 inches. Then, since it is customary to use 4 diametral pitch in such cases, the gear can be made with 52 teeth. For the pinion we may choose 14 teeth. This number is about the smallest it is advisable to use, as with a lesser number the teeth are too weak in the root. As the total reduction is to be 1:8 and the spur gears give a reduction of 14:52 = 1:3.71, the reduction ratio of the bevel gears must be 8/3.71 = 2.15. Hence the torque on the spur pinion shaft will be

$$2.15 \times 168 = 361 \text{ lbs.-ft.}$$

This pinion has a pitch diameter of

$$\frac{14}{4} = 3.5 \text{ inches}$$

and a pitch radius of 1.75 inches, so the tangential force on the pitch radius is

$$\frac{361 \times 12}{1.75} = 2480 \text{ lbs.}$$

Now, applying the Lewis formula, we have

$$2480 = 16000 \times 0.785 \times f \times 0.072,$$

hence

$$f = \frac{2480}{16000 \times 0.785 \times 0.072} = 2.73, \text{ say, } 2\tfrac{3}{4} \text{ inches.}$$

The bevel wheels will have a diametral pitch of 5. We will choose for the pinion 22 teeth, in which case the gear must have 47 teeth, and see how the width of face figures out. If it comes out considerably less than 30 per cent. of the pitch line length, then we can choose a smaller number of teeth, which will result in a greater proportionate face width, and vice versa.

The Lewis formula adapted to bevel gears is

$$w = \frac{S\ p\ y\ L}{3}\ (1 - a^3)$$

where w is the tangential load at the maximum pitch radius of the pinion.

S, the stress in the teeth.
p, the circular pitch.
y, the Lewis constant for the number of teeth.
L, the pitch line length, and
a, the ratio of the distance from the cone apex to the inner and outer ends of the teeth, respectively.

The pitch diameter of the pinion is

$$\frac{22}{5} = 4.4 \text{ inches}$$

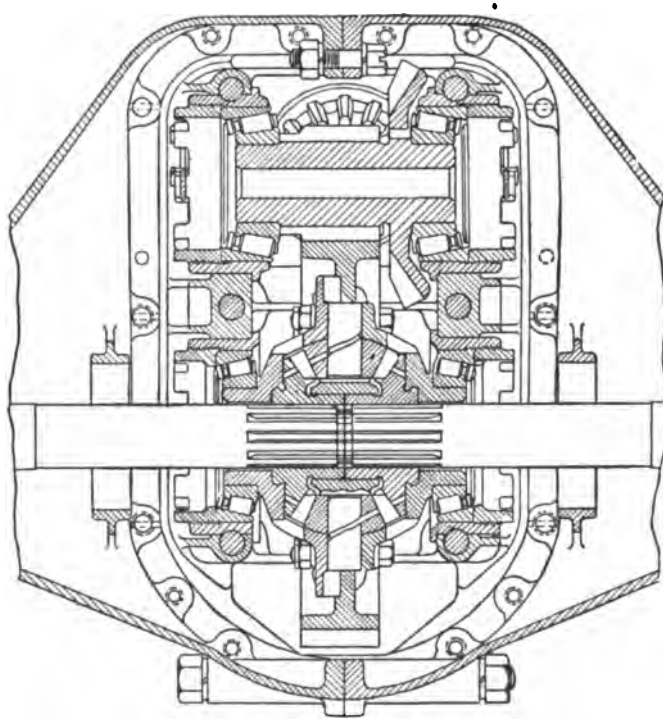

FIG. 227.—AUTOCAR BEVEL-SPUR DRIVE, TRANSVERSE SECTION.

and that of the gear

$$\frac{47}{5} = 9.4 \text{ inches.}$$

The pitch radii are equal to half these values, viz., 2.2 and 4.7 inches, and the pitch line length

$$L = \sqrt{2.2^2 + 4.7^2} = 5.09 \text{ inches.}$$

For the tangential force on the pinion pitch line radius we get

$$\frac{168 \times 12}{2.2} = 917 \text{ lbs.}$$

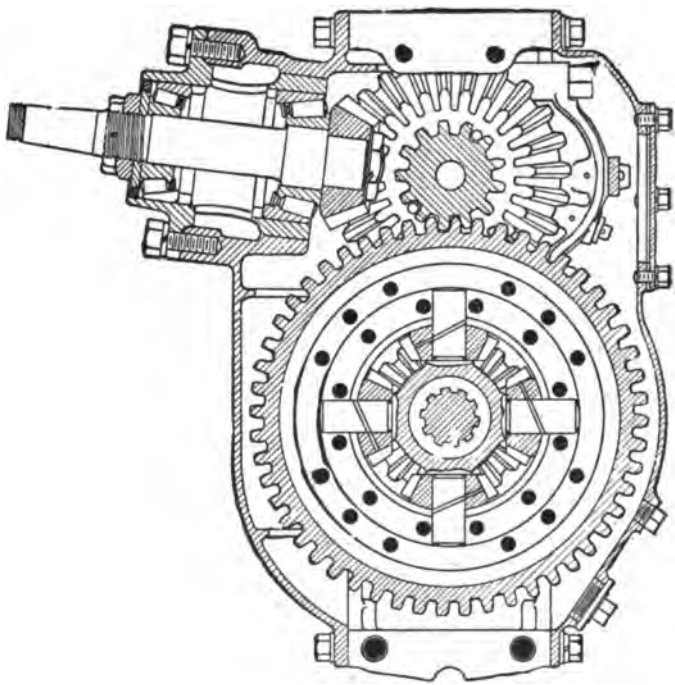

FIG. 228.—AUTOCAR BEVEL-SPUR DRIVE, LONGITUDINAL SECTION.

Therefore, inserting values in the modified Lewis formula, we have

$$917 = \frac{14000 \times 0.63 \times 0.093 \times 5.09}{3} (1 - a^2)$$

$$1 - a^2 = \frac{3 \times 917}{14{,}000 \times 0.63 \times 0.093 \times 5.09} = 0.659$$

$a^2 = 0.341$

$a = 0.7$

That is, the distance from the apex of the cone to the inner end of the pinion teeth must be 0.7 the distance from the apex to the outer end of the teeth. Therefore, the face width must be 0.3 times the pitch line length or

$$0.3 \times 5.09 = 1.527 \text{ — say, } 1\tfrac{1}{2} \text{ inches.}$$

Figs. 227-8 illustrate the Autocar bevel-spur drive which is used on moderate-sized commercial vehicles. The intermediate shaft with which the bevel gear and spur pinion are formed integral, is located directly above the axle and is carried in two roller bearings which can be adjusted endwise to obtain a proper mesh of the bevel gears. Driving keys are used for the spur wheel, which is bolted to the flange of the differential. The short shaft of the bevel pinion is carried in two roller bearings. The axle construction is of what is known as the double banjo type, the main axle housing being in halves which are bolted together at the middle in a vertical plane. Over the two large openings in this casing are bolted a gear carrier and a rear cover plate. All of the gearing is carried by the gear carrier, and, therefore, all adjustments can be made before the axle is assembled.

Internal Gear Drive—While the bevel and spur gear drive as now designed involves the use of a live axle, the internal gear drive is used in conjunction with a dead axle. On the ends of this dead axle the driving wheels are mounted, and each wheel is fitted with an internal gear with which meshes a spur pinion on the end of a differential countershaft. This latter is designed along the lines of a live rear axle, with a gear housing at the middle containing the differential and bevel driving gears, from which extend the differential shafts, sometimes surrounded by tubes. The shafts connect to the differential gear at their inner end and carry a spur pinion each at their outer end. The countershaft may be located either directly in front or to the rear of the dead axle or carrying member and is supported at the middle by connection to that member. If the driving member is located in front of the carrying member the bevel gear on the differential must be located to the left of the pinion; in the opposite case it must be located to the right (assuming the engine to turn right-handedly, as usual).

As in the bevel and spur wheel drive, the greatest reduction is obtained by means of the second set of wheels. Ground clearance is not such an important consideration near the wheels as at the middle of the chassis, and the internal gear crown can be made of considerable diameter. The pitch diameters vary roughly from 12 inches in the lighter trucks to 14 in the heavier ones. As regards pitches and gear materials, what was said in connection with the bevel and spur drive applies here also. The bevel gear set at the middle of the axle can be designed on the same basis as for a bevel-spur drive; that is, about 14,000 lbs. p. sq. in. can be allowed with case-hardened nickel or chrome nickel steel. As the internal gears are generally made of carbon steel, unhardened, a much lower stress is allowed in these gears, about 8,000 lbs. p. sq. in.—the calculations being based on the maximum engine torque directly transmitted. One other reason for the comparatively low stress allowed in the internal gear, besides that above mentioned, is probably that the internal gear cannot be enclosed as effectively as gears located in a housing at the center of the axle and cannot be run in oil. Grit is apt to get into the gear and accelerate the wear, to reduce which the tooth unit pressure is kept low.

Theoretically the internal gear is somewhat more efficient than a spur gear, because there is less sliding action at the teeth of the internal gear, but the actual difference is small.

The internal gear-driven rear axle presents quite a few problems of design aside from the proportioning of the gears. First among these is that of the carrying member, which may be made of solid round, tubular, rectangular or I-section. The axle ends must, of course, be turned off to form seats for the bearings, and as a motor truck axle requires a large lathe to handle it, the spindles have sometimes been made separate, and, after being machined, shrunk into the tubular central portion. Foreign makers use parallel bearings in the wheels, while American makers use ball or roller bearings. Great care must be taken to so mount the internal gear ring that it will permanently run true with the axle, in order to keep the gear quiet and efficient. It seems preferable to secure the gear ring directly to a flange cast integral with the wheel hub, but usually an intermediate piece is employed for convenience in manufacture. The support for the gear ring usually also forms the brake drum. This construction permits of the use of either a contracting brake, directly over the gear ring, an expanding brake (by extending the supporting flange beyond the gear ring), or both.

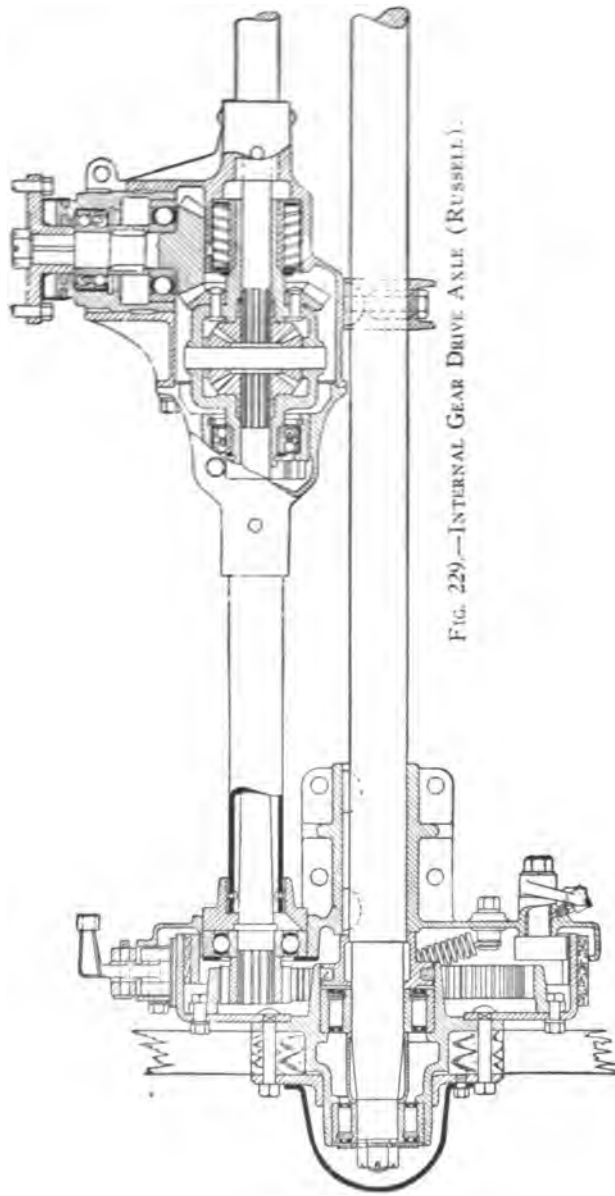

FIG. 229.—INTERNAL GEAR DRIVE AXLE (RUSSELL).

As the spur pinion overhangs its bearings and as the pinion usually has a very small pitch diameter, there is a heavy load on this bearing, for which adequate provision must be made in the selection of the bearing and its mounting. The load can be calculated by the usual method for determining bearing loads due to gear tooth reaction and the problem need not be entered into further. Usually the pinion shaft has its bearing in a disc secured to the carrying member of the axle, which disc serves also as brake support and as a closure for the gear housing or brake drum. As the latter rotates while the disc remains stationary, an oil-tight joint between the two cannot be obtained. Dust may be excluded by cutting a groove in the rim of the disc and filling it with fibrous material or by providing the disc with a flange which overlaps the drum flange.

As the bevel gear and pinion do not differ much in size, there is considerable end thrust on both of them, which must be provided for. This, too, can be calculated by the usual methods.

In an internal gear axle all of the load due to the weight on the springs is taken by the carrying member which, therefore, must be calculated like a dead axle. As the differential shafts do not transmit the full rear wheel torque, but only a fraction of that torque determined by the reduction ratio of the internal gear set, they can be comparatively small and the tubes surrounding them can be made very light. These tubes serve only as housings, obviating the need for packings at the end of the bearings on the differential shafts, and in some cases they are dispensed with.

Four Wheel Drives—The four wheel drive, as pointed out in a previous chapter, is especially advantageous for military trucks and tractors which frequently must operate away from beaten roads. It is also well adapted to use on trucks employed in certain lines of commercial work, as, for instance, in contracting work, where the truck may have to be driven into and out of sand pits or on rain-softened ground. The advantage of the four-wheel drive for tractors or for trucks intended to haul one or more trailers, is obvious, for when the machine must move more than its own weight, more than the usual percentage of its weight must be rendered available for traction purposes. Moreover, with the four-wheel drive the load may be evenly divided between front and rear wheels, whereby the load on any one wheel is kept down and an excessive overhang of the frame over either axle is avoided.

The problem of a four-wheel drive consists chiefly in com-

bining the functions of steering and driving in a single axle. As the steering wheels swing around a substantially vertical axis for steering, a universal connection between the wheels and the propelling mechanism on the frame is necessary, unless the motor and drive are both supported on the axle, or on that part of it which swings in steering. The problem is about the same as that involved in the design of front wheel drives, as used for converting horse fire trucks and on certain other types of special vehicles.

One of the simplest solutions of the problem consists in the use of an electric transmission, with an electric motor mounted directly on each steering knuckle, or on each axle if the whole axle swings in steering. Of mechanical solutions there are three that are well known. The first involves the use of a fifth wheel adapted to turn around a king-pin, so that in steering the entire axle swings around its centre, instead of steering knuckles swinging aroung knuckle pins. The power plant may then be mounted so as to turn with the axle, or the power may be transmitted to the axle by means of gearing of which one member is located concentric with the king-pin.

The second method makes use of a train of bevel gears, of which a pair of intermediate gears is mounted concentric with the steering knuckle pin. This arrangement has some important advantages, but it is rather complicated. In one French design of a four-wheel driven truck employing this construction no less than thirty-two bevel wheels are used in the drive between the gear box and the four wheels. One of the good points of this type of steering and driving axle is that the pivot steering principle is employed, which is preferable to the fifth wheel principle in many respects; another is that as the bevel gears secured to the road wheels swing around the knuckle pivots, no irregularity in the transmission of motion is introduced. That is, whether the road wheels are in the straight-ahead position or not, the transmission of motion from the tail shaft of the gear box to the road wheels is always effected at a constant ratio, there being no periodic fluctuation as with ordinary universal joints.

In the third construction universal joints are employed to transmit the motion from a shaft concentric with or parallel to the axle to a pair of short shafts carried by the steering knuckles on opposite ends of the axle. These three shafts, viz., the long central shaft and the two short shafts connected

to it, may be either concentric with the axle, in which case the short shafts connect to the wheel hubs through driving dogs, or they may form a countershaft, in which case the short shafts carry spur pinions which mesh with spur or internal gear crowns on the road wheels. In either case the universal joint centre must lie in the axis of the steering knuckle pin.

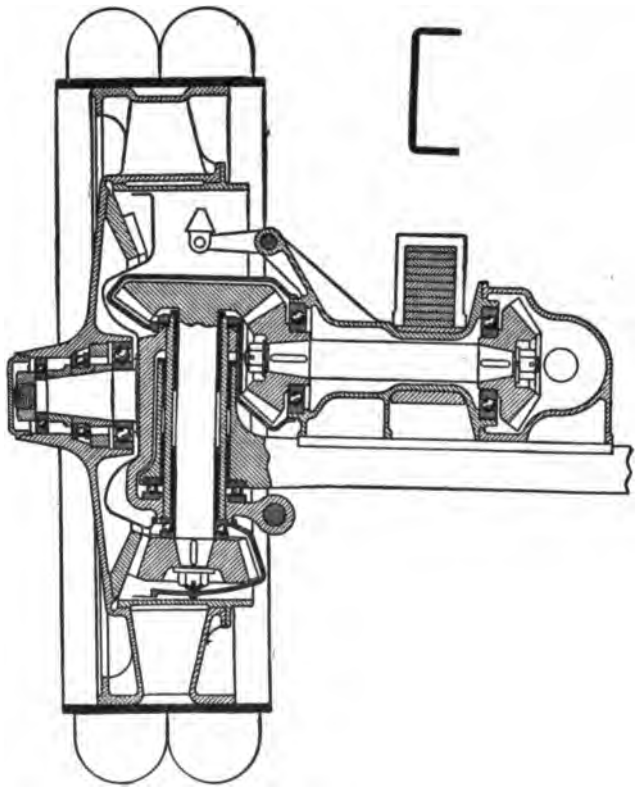

FIG. 230.—PANHARD BEVEL GEAR DRIVEN STEERING WHEEL.

With the latter construction the torque on the universal joint is much less than with the alternate construction, and the axle can be built lighter.

Bevel Gear Steering Wheel Drive—Fig. 230 is a vertical section through the wheel and drive of a Panhard four-wheel

driven truck. Only one universal joint is employed on this truck, located at the rear end of the gear box, on a short cross shaft which is driven by bevel gears from the gear box tail-shaft. At each end of this cross shaft is a bevel gear through which it drives fore-and-aft shafts extending to the front and rear axles, there being four of these shafts in all. As the shaft housings pivot around the axes of the cross shafts, no universal joints are required to compensate for the spring motion. Each of the fore-and-aft shafts at its outer end carries a bevel pinion meshing with another bevel pinion on a short cross shaft extending through a housing underneath the chassis spring, which at its other end carries another bevel pinion meshing with a bevel gear at the top end of a vertical shaft concentric with the steering pivot. The bevel pinion at the

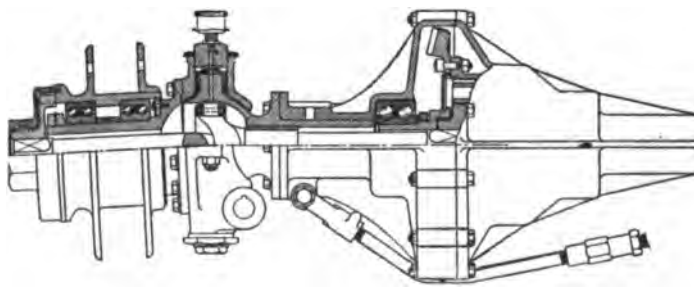

FIG. 231.—F. W. D. COMBINED STEERING AND DRIVING AXLE.

lower end of this shaft meshes with a bevel gear secured inside the enlarged hub of the road wheel. In a more recent design of the Panhard Company, some of the intermediate bevel gear sets are replaced by helical gears, whereby the total number of gears is reduced.

Live Steering Axle—A combined driving and steering axle, in which a universal joint is placed inside the forked axle end, is manufactured by the Front Wheel Drice Auto Co., Clintonville, Wis., and a part sectional view of this axle is shown herewith. On the truck of this concern the change speed gear is located at the middle of the frame, and from the tail shaft of the gearset the power is transmitted by a silent chain to a fore-and-aft shaft with differential gear and universal joints. From this fore-and-aft shaft the power is transmitted to the two driving axles by bevel pinion and gear, a sufficiently large

gear reduction being obtainable because the speed is already reduced somewhat by the silent chain connection between the gearbox and the longitudinal shaft. Each axle contains one differential gear, so that there are three in all on the truck.

Details of the construction of the steering and power transmission joint are shown in the illustration. The steering

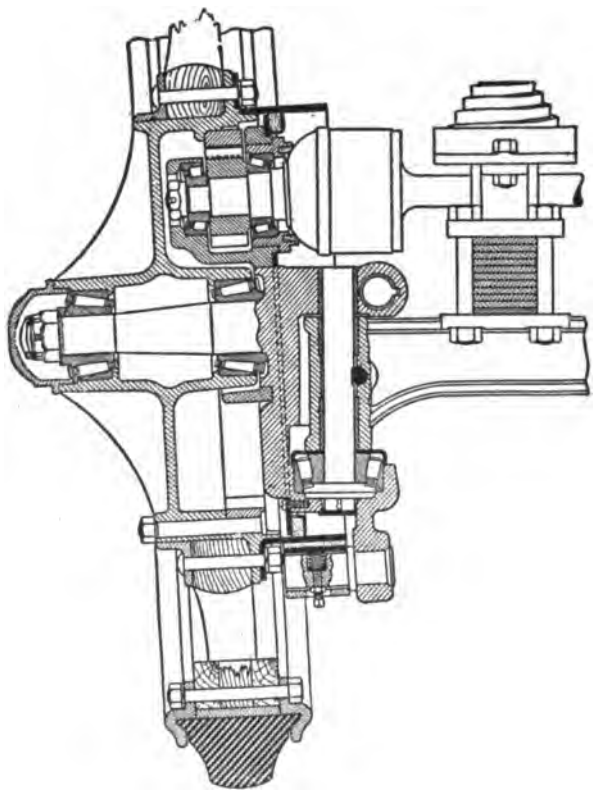

FIG. 232.—JEFFERY COMBINED DRIVING AND STEERING AXLE.

knuckle pivot is developed into a spherical joint which contains trunnions, fully enclosing the universal joint. This joint is of compact design, and as it has to transmit only one-fourth of the power of the engine it is amply large for its purpose.

Internal Gear Steering Wheel Drive—A four-wheel drive by internal gears has been used on Jeffery trucks, and a section through the combined steering and driving wheel is shown in Fig. 232. The sliding gear transmission is placed at the middle of the frame and has no direct drive. The propeller shafts are gear driven from the secondary transmission shaft, this construction bringing the forward one far enough to one side to clear the engine, which is also mounted slightly to one side of the frame centre. Three differentials are used and both axles are pivoted for steering. The cross shafts are located above the springs and have universal joints directly above the steering pivots. The driving pinion is supported on the steering knuckle between roller bearings on opposite sides and meshes with an internal gear ring set into the enlarged wheel hub. A drum for an external brake is also fitted to the wheel hub, and against its inside surface bears a felt packing designed to exclude dust from the gears.

CHAPTER XIII.

BRAKES.

The automobile, being essentially a high speed vehicle, requires powerful and dependable brakes for its safe operation. Aside from the fact that the engine is occasionally used as a brake (as described in Volume I, Chapter XVII) and that in cars with friction drive or planetary change speed gears the reverse gear may be used to retard the speed or bring the vehicle to a stop, drum brakes are invariably used on automobiles. These consist of a steel or cast iron drum secured to some rotating part, either the road wheels or a part in permanent driving connection therewith, and an expanding or contracting member supported by the vehicle frame or axle which can be brought into frictional contact with the rotating member. When this expanding or contracting friction member is pressed against the surface of the drum, the friction created tends to stop the drum and its connected parts from revolving. The energy dissipated in heat at the friction surface of the drum is withdrawn from the kinetic energy stored in the moving vehicle, and the speed of the vehicle decreases as its store of kinetic energy is depleted. The contracting and expanding brakes are shown in diagram in Fig. 233, the black circles representing the brake drums.

Number of Brakes—In several States of the Union and in most foreign countries two independently acting braking systems are required by law, and sometimes it is stipulated that at least one of these braking systems must act directly on the road wheels. What is here referred to as a braking system consists of a single drum and frictional member, if it is located ahead of the differential gear, as on one of the change gear shafts; and of two drums and frictional members when located beyond the differential gear, as on the wheel hubs.

In horse vehicles the brakes are generally applied to the wheel tires. Automobiles are almost invariably fitted with rubber tires, and while the application of brakes to these tires would un-

doubtedly prove very effective, rubber is too expensive to make this practice commercially possible. Therefore, it is customary to secure a metal drum to the road wheels on which the friction members act.

Location of Brakes.—The brake drums may be fitted to either the rear wheels or the front wheels. Rear wheel braking has the advantage that, as a rule, the rear wheels support much more of the weight of the car and the load than the front wheels, and since the limiting brake power depends upon the ground adhesion of the road wheeels, which in turn depends upon the weight carried by the wheels, it is seen that rear wheel brakes have a greater limiting power than front wheel brakes. Be-

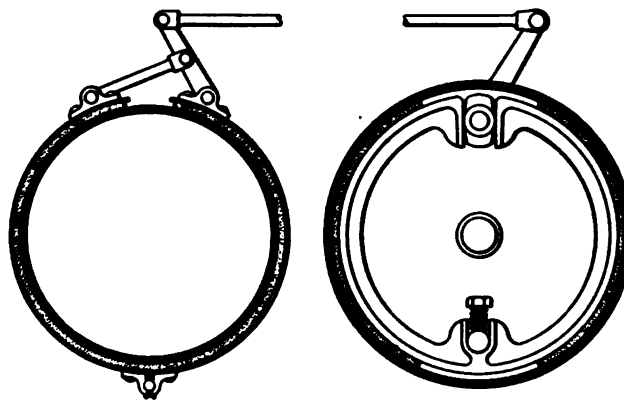

FIG. 233.—DIAGRAMS OF CONTRACTING AND EXPANDING BRAKES.

sides, much less difficulty is encountered in making connections from the operating devices on the frame to brakes on the rear wheels whose planes always retain the same position relative to the frame, than to brakes on the pivotally mounted front wheels. Front wheel brakes have the advantage that an application of the brakes does not tend to cause the car to skid, as does the application of rear wheel brakes—at least not in the same degree. Front wheel brakes have been used to some extent in England and on the Continent, but are practically unknown in this country.

In a bevel gear driven car either both brakes may act on drums secured to the rear wheels or one brake may act on drums so located, and the other on a drum located back of the change gear box. There is, however, one exception, namely, when the transmission is located on the axle, in which case both brakes must

act directly on the wheels. In Europe it is the almost exclusive practice to place one brake close to the gear box and the other on the wheels.

In one respect the proper location for the brakes is as close to the road wheels as possible, because the reaction due to the frictional force on the brake surface takes effect at the road contact of the wheel, and the closer the points of application of the braking force and the point of its final reaction are together, the fewer parts are subjected to strain. With brakes on the hubs of the rear wheels only these wheels are subjected to the strain, whereas if the brake is located back of the change speed gear the braking force has to be transmitted through the propeller shaft, universal joints, bevel driving gear set, rear axle shafts, rear wheel driving dogs and rear wheels. One reason that leads some designers to use a so-called transmission brake is that they want to enclose all of their brakes, which compels them to use the expanding type of hub brakes, the only type lending itself to complete enclosure; and since conditions of space available make it difficult to fit two internal expanding brakes to each wheel, they place one brake back of the change speed gear. As regards the objection to the transmission brake above mentioned, they argue that the various parts which have to transmit the braking force must be designed strong enough to transmit the maximum propelling force, which is about equal to the maximum braking force, hence these parts should not be injured by the latter force. An advantage of the transmission brake is that, since the braking force is multiplied by the rear axle driving gear, a great retarding effect can be produced with a comparatively small operating effort.,

The transmission brake, however, is very little used on pleasure cars in this country at present and is constantly losing ground. There are three arrangements of double rear wheel brakes, all in practical use, viz., two internal brakes acting on the same drum, one internal and one external brake on the same drum, and two internal brakes on concentric drums.

On commercial vehicles with side chain drive it is the practice to place one set of brakes on the rear wheels and the other on the ends of the jackshaft. If the worm drive is used, one brake may be placed on the transmission shaft and the other set on the rear wheels.

Service and Emergency Brakes.—One set of brakes is generally designated as the service brake and is intended for all ordinary occasions. It is operated by means of a pedal or foot lever, because the driver can keep one foot on the brake pedal all the time and therefore can operate such a brake with a minimum of effort. The other brake is known as the emergency brake and is intended for use only in case the service brake fails or when an exceedingly strong braking action is required. This emergency brake is generally operated by a hand lever located at the side of the driver's seat. If the car is fitted with a "transmission" brake, the latter is usually the service brake.

Calculation of Braking Power.—The emergency brakes at least are generally made sufficiently powerful to slip the wheels of the car on dry road surface. Assuming that six-tenths of the total weight of the car and load rests on the rear wheels, and that the ground adhesion is 0.6, the maximum brake force is

$$0.6 \times 0.6\, W = 0.36\, W.$$

Suppose that the car is traveling at a speed V miles per hour $= 1.466\, V$ feet per second. Then the kinetic energy stored up in it is

$$\frac{W(1.466\, V)^2}{2g} = \frac{WV^2}{30}\ (appr.).$$

Now let the brakes be applied so as to lock the wheels and the car be stopped after running a distance x. Then

$$0.36\, W x = \frac{W V^2}{30}$$

and

$$x = \frac{V^2}{10.8}$$

This equation gives the minimum theoretical distance in which a car can be stopped, provided six-tenths of the total load rests on the rear wheels. If a greater proportion of the load is carried by the rear wheels the minimum stopping distance will be smaller. It will be seen that the distance is proportional to the square of the initial speed.

In some official trials held by the Automobile Club of America on Riverside Drive, New York City, in May, 1902, the average distance in which the cars came to a stop was $\frac{V^2}{6.7}$ *feet.* In a recent unofficial test on a macadam pavement on Kings Highway, Long Island, New York, a car was brought to a stop from various speeds in distances which may be represented by the ex-

pression $\frac{V^2}{17.4}$. It should be pointed out that it is very difficult to obtain uniform results in such tests; first, because the results vary with the gradient, with the direction and strength of air currents and with the road conditions, and second, because it is practically impossible to insure that the driver shall shut off his power and apply his brakes exactly at a given point along the road.

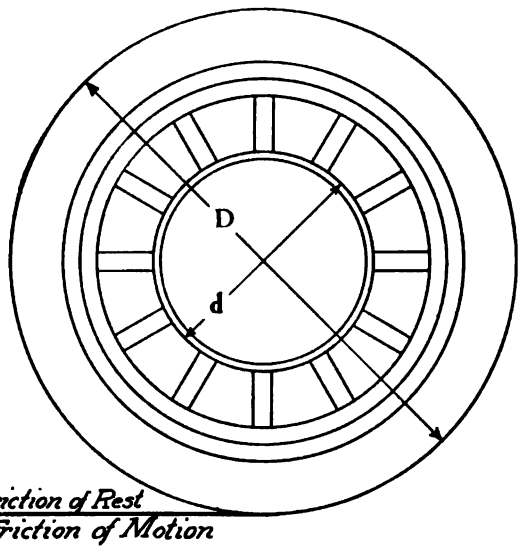

FIG. 234.

Conditions Insuring the Quickest Stop—It was found in experiments made by the Westinghouse Air Brake Company that railway car brakes exert the greatest retarding effect when applied with such force that the wheels do not quite lock but continue to revolve. This same condition undoubtedly exists in connection with automobile brakes. It may be explained on the grounds that the friction of rest is greater than the friction of motion, and that when the wheels become locked the rolling friction of the wheel on the ground and the bearing friction of the axle and propeller shaft cease.

The braking effect certainly is the greatest if the energy dissipated in friction in traveling a unit distance is a maximum. Let R be the starting resistance of the wheel to slippage on the road (friction of rest) and r the resistance of the

wheel to slippage once it has begun (friction of motion). Also let D be the wheel diameter and d the diameter of the wheel brake drum. Then the maximum frictional force which can be applied to the brake drum without causing the wheel to slip is

$$\frac{D}{d}(R - a),$$

where a is a very small quantity. While the car travels a unit distance the brake drum circumference moves a distance $\frac{d}{D}$ in its rotation and the energy absorbed at the brake surface is

$$\frac{d}{D} \times \frac{D}{d}(R - a) = R - a.$$

In addition to this we have the energy absorbed by the rolling friction at the road contact and the bearing friction. We will denote the sum of these two frictional forces, both referred to the wheel rim, by B, and the energy absorbed by these two resistances while the car moves through unit distance may also be represented by B. Therefore, the total energy absorbed while the car travels a unit distance when the brakes are on but the wheels are not locked is $R + B - a$.

On the other hand when the wheels are locked, after slipping has begun, which, of course, occurs instantly, the only resistance encountered is the sliding friction r of the wheel on the road. The energy absorbed in unit distance due to this friction is also r. Hence we must prove that

$$R + B - a > r.$$

It has already been stated that the friction of rest R is greater than the friction of motion r. This holds good under all ordinary conditions of friction, as in bearings, etc., and no doubt, holds true in connection with sliding friction between rubber tires and road surfaces. Of the two remaining items B has a definite value which on good roads is from 4 to 5 per cent of the sliding friction. The item a, on the other hand, may be made practically nil, as it represents the margin which, if added to the brake friction referred to the wheel circumference would cause the wheel to lock. Hence, under the most advantageous conditions this item is insignificant and the retarding action is then greater than that due to locked wheels by the sum of the following three items: The rolling friction of the wheels on the ground, the bearing friction in the axle, propeller shaft and transmission, and the difference between

the friction of rest and the friction of motion between wheel and road.

Not only will the brakes stop the car quicker when they are not quite locked but the wear and tear on the tires is greatly reduced. It would, therefore, be a great advantage if a brake could be designed by which the wheels could not possibly be locked by the driver but which could nevertheless be applied to such a degree as to come very near to locking the wheels.

Determination of Dimensions—The two considerations which determine the size of brake drums are that the brakes must be powerful enough to practically slip the wheels, and the radiating surface of the brakes must be large enough to prevent undue heating on long down grades. Besides, the larger the brake surfaces, the longer the friction linings will last.

The drums of hub brakes on pleasure cars are generally made of a diameter equal to 35–45 per cent. of the wheel diameter, while in heavy motor trucks the brake drum diameter is made as high as 55 per cent. of the wheel diameter. On pleasure cars the hub brakes should have a friction surface equal to 1 square inch per 15 pounds of car weight; the transmission brakes, 1 square inch per 30 pounds of car weight. On commercial vehicles, the hub brakes should have 1 square inch per 30 pounds of car weight loaded; jack shaft brakes, running at a speed intermediate between engine and rear wheel speed, 1 square inch per 85 pounds of car weight, loaded, and transmission brakes of commercial vehicles running at engine speed, 1 square inch per 175 pounds of car weight, loaded. Considerable latitude is permissible as regards the relation of face width to diameter in transmission brakes, and no general rules can be given. If the brake is located at the middle of the frame where there is ample room in the direction of its axis, it is usually made comparatively wide and of small diameter, whereas if the brakes are at the side of the frame, where space in the axial direction is limited, the drum diameter has to be made somewhat larger.

Brake Drums—The drums of hub brakes are now almost invariably made of pressed steel and in many cases the brake drum serves also as the loose flange of the artillery wheels. The thickness of the metal is made ⅛ inch for cars weighing with load up to 1,800 pounds; ⅛ inch up to 4,000 pounds; ¼ inch up to 7,000 pounds; ⅛ inch up to 12,000 pounds, and ⅜ inch above 12,000 pounds. If the brake drum serves as a hub flange it is generally pressed with an inner cylindrical flange fitting over a machined portion of the hub. In this case the drum

is held in position by the hub bolts. If the drum is not part of the wheel it may be clamped to the spokes by means of clips. A typical design of pressed steel brake drum is shown in Fig. 235.

Contracting Brakes—The contracting members of contracting brakes are either made in the form of bands of thin rolled steel encircling nearly the whole drum, or they may be made in the form of two sectors, either of rolled steel or of cast material —steel or malleable iron. The contracting members are generally lined with an asbestos and wire fabric, of which there are several on the market—Raybestos, Thermoid, Non-Burn, etc.—this lining

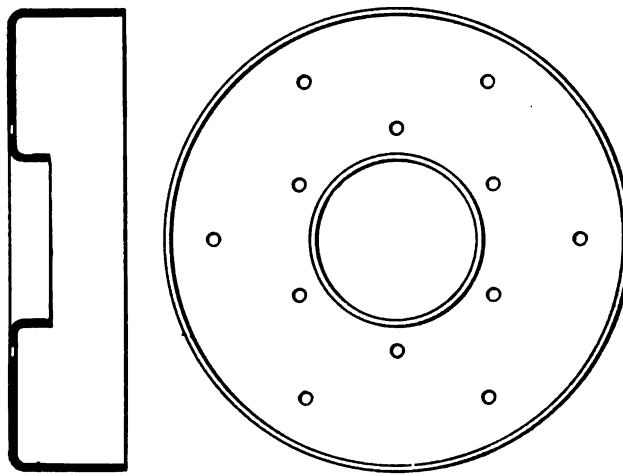

FIG. 235.—PRESSED STEEL BRAKE DRUM.

being secured to the metal band or segment by means of copper rivets. The friction coefficient of asbestos on steel is about 0.3.

The contracting members must be supported in a substantial manner, as the reaction of the braking force must be taken up by the support. In early designs of band brakes it was customary to fasten one end of the band to the support and exert a pull on the other end. This gives a very powerful braking effect for one direction of motion—the forward direction—because the friction between band and drum tends to apply the band tighter to the drum. But when the car runs backward, down hill for instance, the friction tends to unwind the band

and the braking effect is then very small. Such brakes are known as single acting and are no longer used.

In order to obtain a double acting effect, contracting brakes are now always anchored directly opposite the contracting mechanism. Brake segments are formed with eyes for the anchorage joint, and steel bands have a fitting riveted to them which serves the same purpose. The support is usually a bracket secured to the rear axle tube, and in a few cases the radius rod.

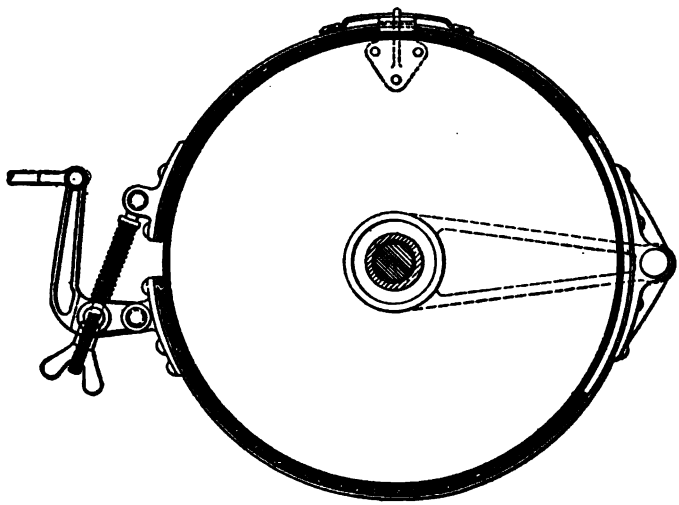

FIG. 236.—CONTRACTING BAND BRAKE.

So far as contracting type hub brakes are concerned, a single style of contracting mechanism is used for the great majority of designs. It consists of a floating bell crank as shown in Fig. 236.

One end of the brake band is connected by means of a riveted bracket to the end of the short arm and the other end connects through a short link to the fulcrum of the bell crank. The operating rod is connected to the long arm of the bell crank. The link is hinged to the free end of the brake band and passes through the fulcrum pin, the bell crank being forked at the lower end. A butterfly nut is screwed over the end of the link and provides convenient means of adjustment for wear. The adjustment is locked by the spring surrounding the link, which forces

the arms of the bell crank over the flattened end of the wing nut, thus preventing it from turning. The coiled spring at the same time helps to release the band when the pressure is taken off the brake lever.

There is one other form of contracting mechanism for hub brakes, consisting of a short double armed lever with pins extending laterally from the ends of its arms to which the ends of the brake band are hinged, and an operating shaft, rigidly supported, extending from it laterally in the opposite direction (Fig. 237).

FIG. 237.—DOUBLE-ARMED LEVER CONTRACTING MECHANISM.

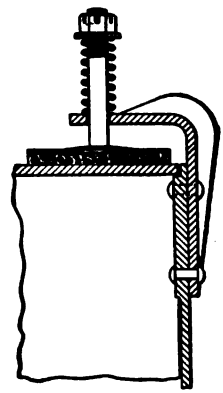

FIG. 238.—ADJUSTABLE BRAKE BAND SUPPORT.

Releasing Means—In addition to providing a substantial support for the brake band and an effective contracting mechanism, it is necessary to provide means which will prevent dragging of any part of the brake band when released. In order to prevent dragging near the point of anchorage, a portion of the band extending over a considerable angle on both sides of the anchorage may be left unlined, or else the hole in the anchoring fitting may be made oblong in the radial direction so that the brake band can move outward when released. Such outward movement is insured by placing a spring at the point of anchorage soliciting the band radially outward, or by placing stops at 120 degrees (more or less) on either side of the point of anchorage which limit the outward movement of the band at these points and thus tend to distribute the clearance evenly around the circumference of the drum.

The contracting mechanism may be placed on top of the drum or on the forward side of it. The latter is the favorite location, partly because it brings the brake connecting rods into a more convenient level and partly because with the split in the band at the side of the drum, mud dropping from the wheel cannot so easily work between the band and drum.

Owing to the fact that the brake band is firmly supported at one side only, at the anchorage, when released it tends to drop on to the drum on top and thus drag. In order to prevent this a brake band carrier is usually placed on top of the brakes. In Fig. 208 this takes the form of a little angle piece riveted to the brake support disc and extending across the top of the brake band underneath a little flat spring extending circumferentially of the band and being riveted to it. When the brake is released the spring lifts the band off the drum, but when it is applied, the spring flexes slightly and allows the band to come in contact with the drum. Sometimes three of these brake band carriers are used, spaced equally around the circumference, and in some designs the brackets themselves are springs.

The band supporters are not adjustable and must therefore be very accurately made and fitted. Besides, if some means of adjustment were provided, less clearance would suffice. An adjustable supporter is shown in Fig. 238. A threaded pin riveted into the brake band extends vertically upward at the top of the brake through a hole in an angle piece secured to the brake support disc. A coiled spring is placed on top of this angle piece and presses against a castellated nut on the end of the threaded pin.

Contracting Transmission Brakes.—In European cars the service brake is generally located at the rear end of the change gear primary shaft and both expanding and contracting types are used at this point, the latter being perhaps the most numerous. Most of the contracting brakes have cast sectors, and these are contracted by means of either one or two pairs of face cams or by a square threaded screw and nut mechanism. Continental manufacturers generally cast four or five circumferential ribs on the brake segments (Fig. 239) to help carry off the heat in making long descents. The brake drum of a transmission brake is generally a casting keyed to the rear end of the gear box primary shaft and often has two lugs cast on its web which form part of the universal joint. The brake segments are anchored to the gear box and the stops and supports of the

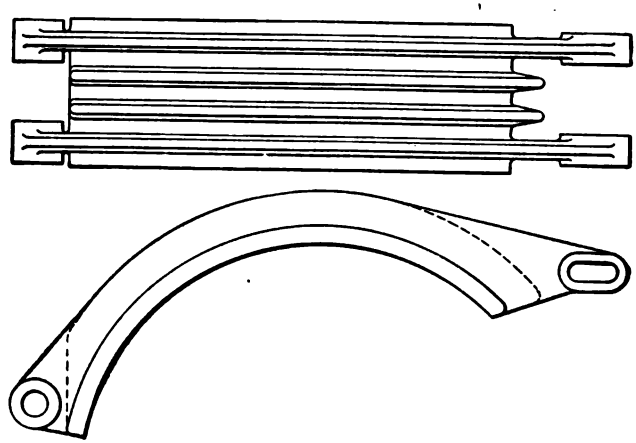

FIG. 239.—BRAKE SEGMENT WITH COOLING FLANGES.

contracting mechanism also are secured thereto. Fig. 240 illustrates a design of contracting transmission brake with face cam contracting mechanism. These brakes generally have metallic friction surfaces. A transmission brake of the lever operated band type is illustrated in Fig. 241.

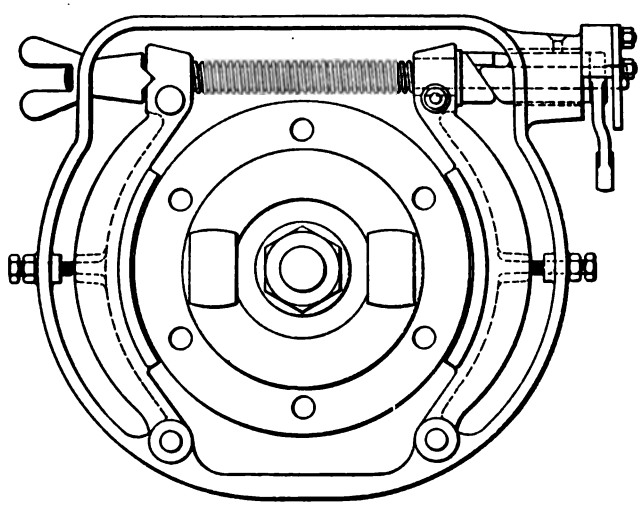

FIG. 240.—CONTRACTING TYPE OF TRANSMISSION BRAKE.

Stresses in Brake Members—We have assumed the maximum braking force to be equal to 36 per cent. of the total weight of the car and load. The braking force being produced on two wheels, that on each wheel is 0.18 W. Now let the wheel diameter be D and the brake drum diameter d, then the tangential force on the circumference of the brake drum is

$$F = 0.18 \frac{D}{d} W$$

The reaction due to this force is taken up in the brake support.

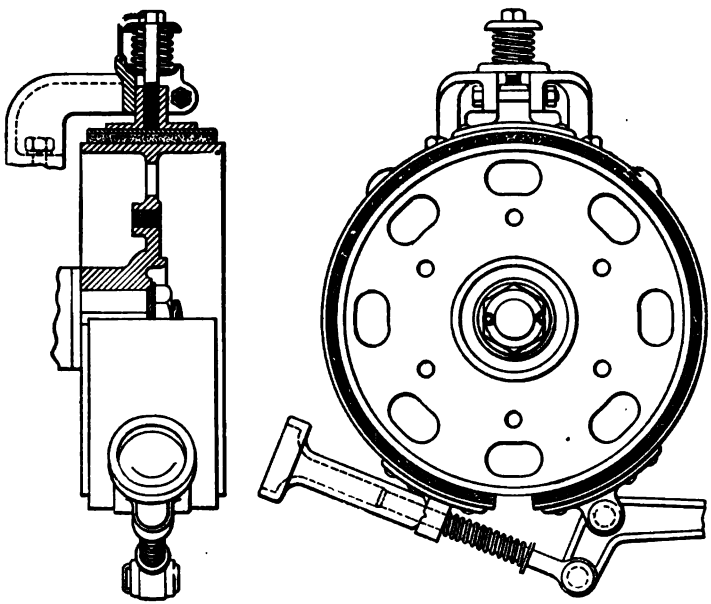

FIG. 241.—CONTRACTING BAND TRANSMISSION BRAKE.

In Fig. 242, F represents the reaction of the support on the brake band. Each half of the band covers an angle of about 165 degrees $= \frac{11}{12}\pi$. In calculating the forces on the brake band use is made of the method developed in connection with band clutches, the band brake and band clutch depending upon the same principle. We found (equation 19) that the relation between the initial tension P_1 on the band and the pull P on the anchorage is such that

$$P = P_1 e^{f\Theta},$$

where e is the base of the natural system of logarithms; f the friction coefficient and Θ the arc of contact between band and drum in circular measure. With a friction coefficient of 0.25 and an arc of contact for each half of the band of $\frac{11}{12}\pi$, the value of $f\Theta$ is 0.72, and the value of $e^{f\Theta}$ is found to be 2.08. (See Fig. 36.)

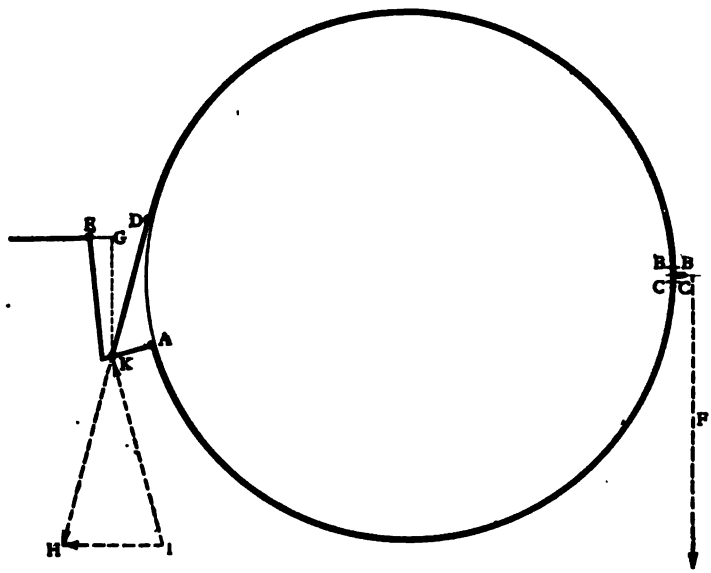

FIG. 242.—DIAGRAM OF FORCES ON A BAND BRAKE.

In Fig. 242 let us denote the tension on the band at point D by x. Then the tension at the section CC just ahead of the point of anchorage is $\frac{x}{2.08}$. The tension at the section BB, just beyond the point of anchorage, is $\frac{x}{2.08} + F$ and the tension at the point D is

$$\frac{\frac{x}{2.08} + F}{2.08}$$

Hence the tensions at the two ends of the band are x and $\frac{\frac{x}{2.08}+F}{2.08}$ respectively. A relation between these two forces can be found from the diagram of forces acting on the contracting bell crank.

It will be seen that the reaction on the fulcrum of the bell crank must be equal in magnitude and direction to the tension at the end D of the band, and the dotted line KH represents this force. This reaction is the resultant of the forces acting on the arms of the bell crank. We will assume that the brake rod connecting to the vertical arm lies in a horizontal plane, hence the pull on this rod is horizontal. The force on the short arm of the bell crank is tangential to the extreme point of contact of this half of the band. This enables us to complete the diagram of forces KHI. From this we see that with this particular design of band and operating bell crank the tensions at the two ends of the band, KH and KI, are equal. Hence

$$x = \frac{\frac{x}{2.08}+F}{2.08}$$

$$2.08\,x = \frac{x}{2.08}+F$$

$$3.326\,x = 2.08\,F$$

$$x = 0.624\,F$$

Inserting the value of F found previously we have

$$x = 0.624 \times 0.18 \frac{D}{d} W.$$

The diagram also enables us to determine the proper length for the effective lever arm KG.

In order that the operating mechanism may be in equilibrium, the moments around any point must vanish. Taking moments around the fulcrum K—

$$HI \times KG = KI \times KA$$

and

$$KG = \frac{KI}{HI} KA$$

Let us assume the case of a car weighing with load 3,000 pounds, and let the ratio of wheel diameter to brake drum diameter be 2½. Then the reaction F on the brake support is

$$0.18 \times 2\tfrac{1}{2} \times 3{,}000 = 1{,}350 \text{ pounds},$$

and the tension on each end of the band is

$$0.624 \times 1{,}350 = 843 \textit{ pounds.}$$

The angle between the forces KH and KI being 30 degrees, the value of HI is

$$2\ KI \sin 15° = 2 \times 843 \times 0.259 = 436 \textit{ pounds.}$$

Therefore, the effective lever arm KG should be to the effective lever arm KA as 843 is to 436; in other words, the former should be about twice as long as the latter.

We now have the following results:

Reaction F on brake anchorage, 1,350 pounds.

Tension on each end of the band, 843 pounds.

Tension in brake rod, 436 pounds.

These are extreme values and are hardly likely to be attained in practice, owing to the fact that the limiting pressure which the driver can exert on the brake pedal is about 100 pounds, and in order to produce a tension of 436 pounds in each of the two brake rods, the thrust on the pedal would have to be multiplied more than eight times by the leverage, which is rather a higher leverage than is obtainable in practice.

The value of the force F on the brake anchorage permits of calculating the necessary size of the laterally extending stud or pin and of the bracket which carries this stud. Thus, let the entire overhang of the anchorage pin be 2 inches, so that the centre point of the band overhangs 1 inch. Then the bending moment of the force F is 1,350 pounds-inches, and

$$\frac{\pi D^3 S}{32} = 1{,}350$$

Since the force assumed is practically the limit that can ever come on the brake support we can make the stress comparatively high, say 20,000 pounds per square inch. We then have

$$20{,}000\ D^3 = 13{,}750.$$

$$D^3 = 0.6875.$$

$$D = 0.88 \textit{ inch} — \text{say, } \frac{7}{8} \textit{ inch.}$$

Other parts of the brake mechanism, such as the brake anchorage bracket and the contracting lever, can be calculated for strength in a similar manner.

Expanding Mechanism—There are four commonly used means for expanding the sectors of internal brakes, viz., cam, toggle, wedge and double-armed lever mechanisms. The cam is probably the most extensively used. Three designs of expander cams are illustrated in Fig. 243. The symmetrical cam shown at

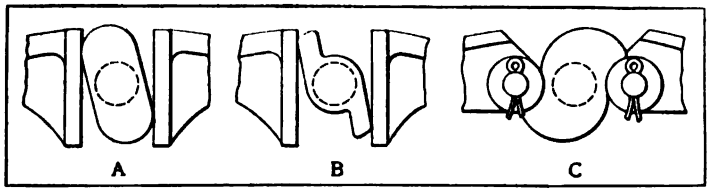

FIG. 243.—EXPANDER CAMS.

A has flat sides and semi-circular ends, and its small diameter is usually one-half its big diameter. The second design, *B*, has practically the same effect as the first, but is preferable from the standpoint of weight economy, having some useless metal cut out. The third design, *C*, embodies roller cam followers carried on the ends of the brake segments, the idea being to minimize wear of the working parts.

The segments of cam-operated expanding brakes are provided with flat wearing surfaces against which the cams bear, and these wearing surfaces and the cams are case hardened. The extreme motion provided for in the case of a 14-16-inch drum is usually ½ inch for the end of each segment.

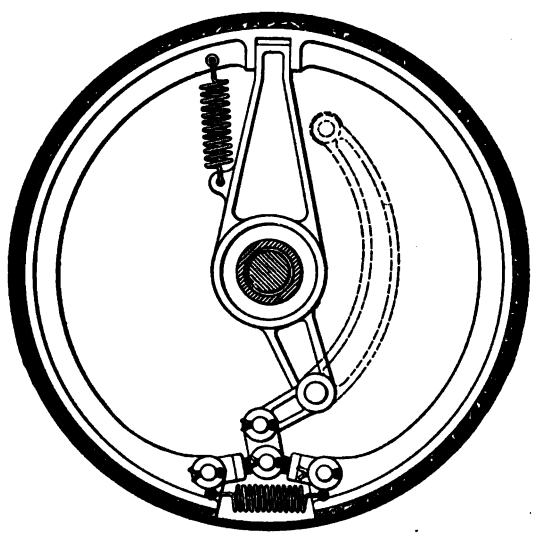

FIG. 244.—TOGGLE EXPANDER BRAKE.

Fig. 244 illustrates a brake with a toggle expanding mechanism. The ends of the segments are connected by a pair of toggle links from the joint of which runs another link to a bell crank whose shaft has a bearing in the brake supporting bracket. Sometimes one or both of the toggle links are made adjustable. The toggle mechanism, like the cams, has the advantage that it moves the ends of the brake segments comparatively fast at first, but more slowly as the segments come in contact with the drum. Its mechanical advantage increases as the segments are being expanded, consequently with a certain effort on the part of the operator the segments can be applied to the brake drum with greater force than if the mechanical advantage remained con-

FIG. 245. WEDGE EXPANDER MECHANISM.

FIG. 246.—DOUBLE-ARMED LEVER EXPANDER.

stant. The toggle mechanism is really the only one that can be properly adjusted for wear of the brake lining, by adjusting the length of the toggle links. The only way in which the other mechanisms can be adjusted is to make the expanding range considerably larger than is necessary when the brake lining is new, and then, as the lining wears, adjusting the operating linkage outside the brake drum.

A wedge expander is shown in Fig. 245. The ends of the segments are beveled and a wedge pivoted to a cantilever is forced between them. The double-armed lever mechanism as applied to an expanding brake is shown in Fig. 246, and is identical in principle with the double-armed lever contracting mechanism already described.

Details of Expanding Brakes.—The anchorage of expanding brakes is always substantially opposite the expanding mechanism. When both internal and external hub brakes are fitted, the same brake support usually serves for both, but if there are only expanding hub brakes, the brake supports may be located inside the brake drums to reduce the overhang, or the segments may even be supported symmetrically. The brake segments are made either of malleable iron castings, drop forgings or band steel. When they are drop forged or cast they are usually made of T-section, while if they are made of band steel the expanding ends are bent triangularly to form cam faces, or suitable lugs are riveted to them.

As regards means for releasing the segments, they may either have a rigid hinge support, in which case the friction facing must not come closer than about 30 degrees to the point of support, or they may be supported yieldingly in the axial direction, in which case the friction material may extend to the very ends of the segments. The first arrangement makes the simplest construction, as all that is necessary to prevent dragging of the segments when released is to provide a tension spring extending between the two segments, preferably as close to the ends as possible without interfering with the expanding mechanism. With the second arrangement the supporting stud extends through oblong holes in the end of the brake sectors and either two or three springs have to be provided to insure clearance between the segments and drum all around when the brake is released. Sometimes only a single expanding member is used (Fig. 244), forming almost a complete ring and having an anchoring slot at the middle of its length into which extends the flattened end of the brake supporting arm or a laterally extending stud.

Expanding brakes can be calculated by the same methods as used for contracting band brakes, at least those in which the expanding force is applied to the ends of the segments in a direction substantially tangential to their circumference at the cut. The brake rods extending forward from the brakes are generally made either ⅜ inch or ⅝ inch in diameter in pleasure cars and ½ inch in trucks.

Facing Materials.—In American practice the segments of expanding brakes are generally faced with asbestos friction fabric. In Europe, on the other hand, the expanding members usually have metallic friction surfaces, either cast iron or bronze, as shown in the accompanying cut of the Panhard brakes, Fig.

247. Cast iron on steel without lubrication has a friction coefficient of about 0.15 which is quite satisfactory. The objectionable feature of metallic brake surfaces is that they lose very much of their effectiveness when they are covered with oil or grease, and since the brake drums are nearly always located close to some bearing, it is rather difficult to keep oil out of them. It will be seen from Fig. 247 that in the Panhard brake the lining strips are cut with slanting grooves designed to scrape the oil

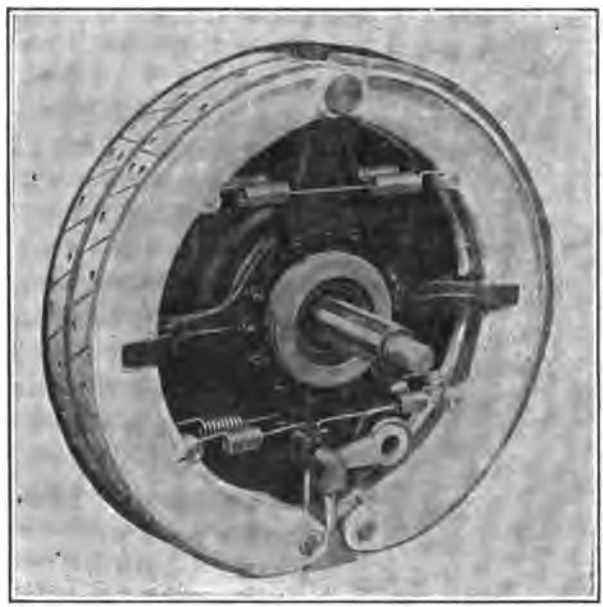

FIG. 247.—PANHARD BRAKES.

off the brake drums. In order to prevent oil from the rear axle housing working out to the brake drums, it is necessary to provide packings at both sides of the driving gear housing, and there also should be some kind of oil guard at the inner end of the wheel hubs. Asbestos fabric possesses the two valuable features that its friction is little affected by oil on it, and that it is not spoiled by heat. Grease cups must be provided for all bearings of the brake mechanism and the bearings for overhanging parts must be made relatively long.

The brake support is generally in the form of a malleable casting which is riveted to the axle tube. Sometimes this support is a full disc and forms the cover for the brake drum, while in other designs it is in the form of a bracket or spider with ribbed arms, which has a sheet metal disc fastened to it to close the brake drums. It is customary to have the brake drum extend over the edge of the closing disc and leave a clearance of about $\frac{1}{8}$ inch between the two parts.

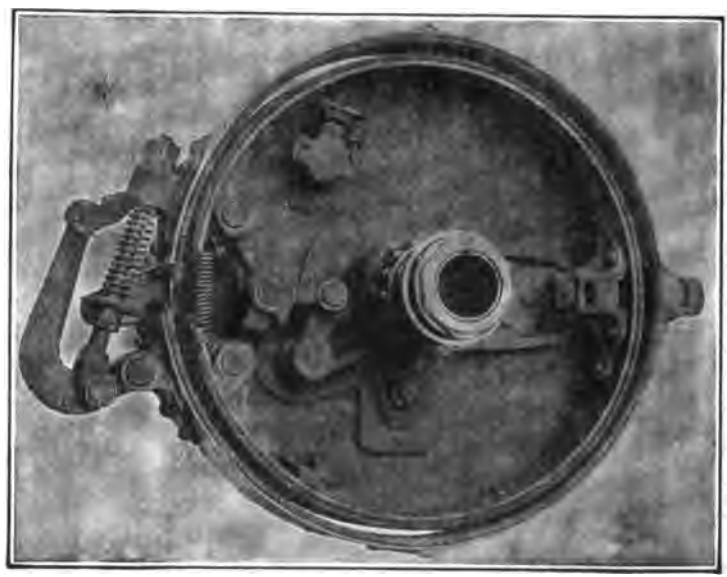

FIG. 248.—TIMKEN BRAKES.

The Timken internal and external brakes, illustrated in Fig. 248, are good examples of American brake design.

Brake Adjustment—The facing material of the brakes wears in the course of time and this makes adjustment necessary. With some designs of expander mechanism, such as the toggle links, adjustment can be made in the length of the ring formed by the brake segments and their connections. In the case of other expander mechanisms, like the cam, the adjustment must be made outside the brake drum. When the brake lining is worn the cam has to be turned further in order to apply the segments firmly to the drum, and if it is found that it cannot be turned

sufficiently far with the original adjustment of the brake linkage, then the lever on the cam shaft has to be moved around the shaft. A design of adjustable brake lever is shown in Fig. 249. The device comprises in reality two levers, one free on the shaft and the other keyed to it. The short, fixed lever is provided with a slotted sector to which the free lever can be secured by means of a clamp screw. The clamping surfaces are grooved to prevent slipping.

Brake Equalizers—Unless the brakes on opposite sides of a car produce equal retarding effects the car has a tendency to skid. In order to produce these equal retarding effects the first thing necessary is to apply equal operating forces to the two

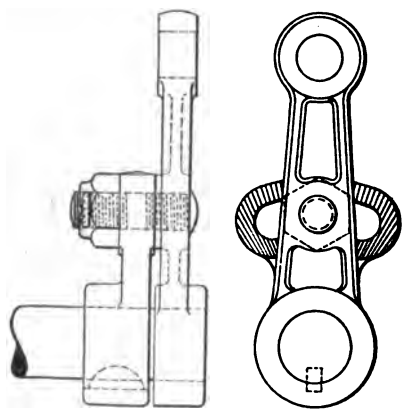

FIG. 249.—BRAKE LEVER ADJUSTMENT.

brakes of each set. This necessitates an equalizing device in the brake operating linkage, which usually takes the form of a balance lever. A few makers, following a design which originated in France, use a long balance lever extending entirely across the frame, through slots in the side members or formed by guides secured to the under side of the side members. The balance levers are made of sheet steel bent double, with the width decreasing from the middle toward the ends, and sometimes holes are punched through the sheet metal to lighten the levers. (Fig. 250). These balance levers are placed comparatively far to the rear, about even with the most forward part of the road wheels, so as to make the connections to the brakes outside the frame short.

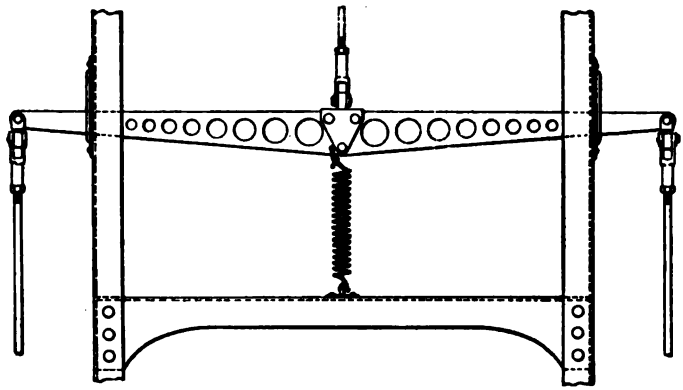

FIG. 250.—LONG BAR EQUALIZER.

The more common form of brake equalizer is illustrated in Fig. 251. The principle is the same as that embodied in the equalizer just described, but the balance lever is much shorter and the brake operating effort is transmitted to the sides of the frame by members working under torsion instead of under bending stresses. Where it is not possible to support the brake equalizing shafts by intermediate bearings, the equalizing lever should

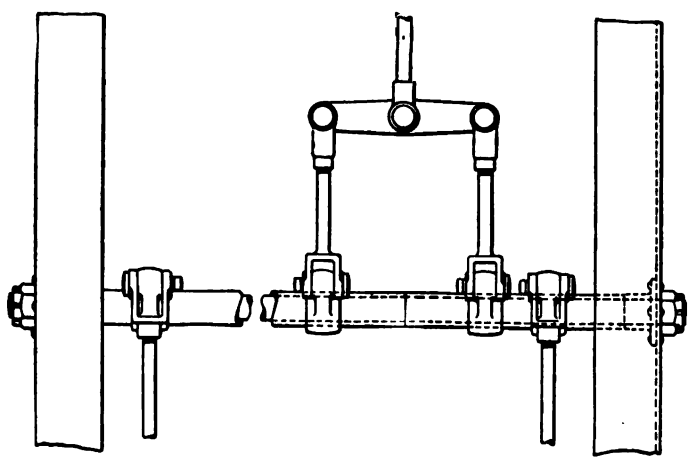

FIG. 251.—CONVENTIONAL EQUALIZER.

preferably be placed close to one side of the frame, so as to minimize the bending moments.

We have so far supposed that connection from the hub brakes forward is made by rods located outside the frame. These rods tend to give the chassis a "trappy" appearance, especially if they are long enough to show in front of the wheels, and many designers prefer to place all rods inside the frame. This necessitates an extra pair of bearings for the brake expander shafts as shown in Fig. 252. Sometimes these bearings are carried by arms just inside the springs, while in some designs of rear axles these extra bearings are close to the driving gear housing. When located in the last described manner the equalizing lever may be

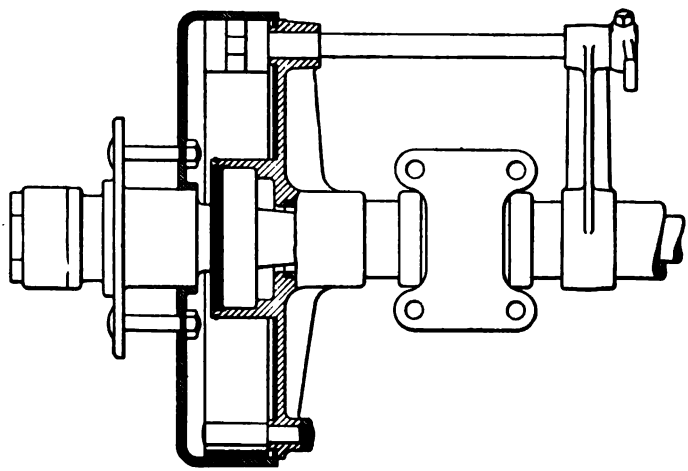

FIG. 252.—BRAKE SHAFTS CARRIED IN DOUBLE BEARINGS.

connected directly to the short levers at the inner ends of the expander shafts.

Arrangement of Brake Rods—The forward connections of the hub brake rods should be so located that the compression and extension of the rear springs will not affect the application of the brakes. This point is of particular importance in connection with motor trucks, on account of the comparatively large motion of the springs when the truck is loaded or unloaded, but in the past it often has been overlooked. If a motor truck has to be stopped for loading or unloading on a grade, unless the brake connections are properly designed, the brakes are liable to loosen

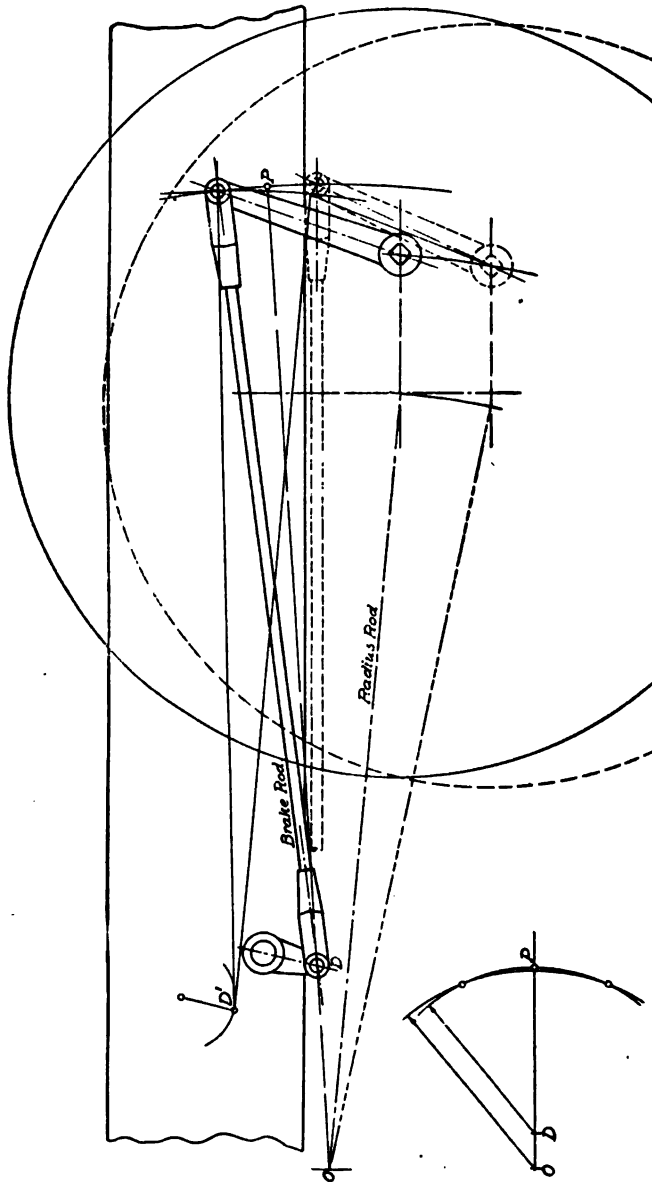

FIG. 253.—ARRANGEMENT OF BRAKE RODS.

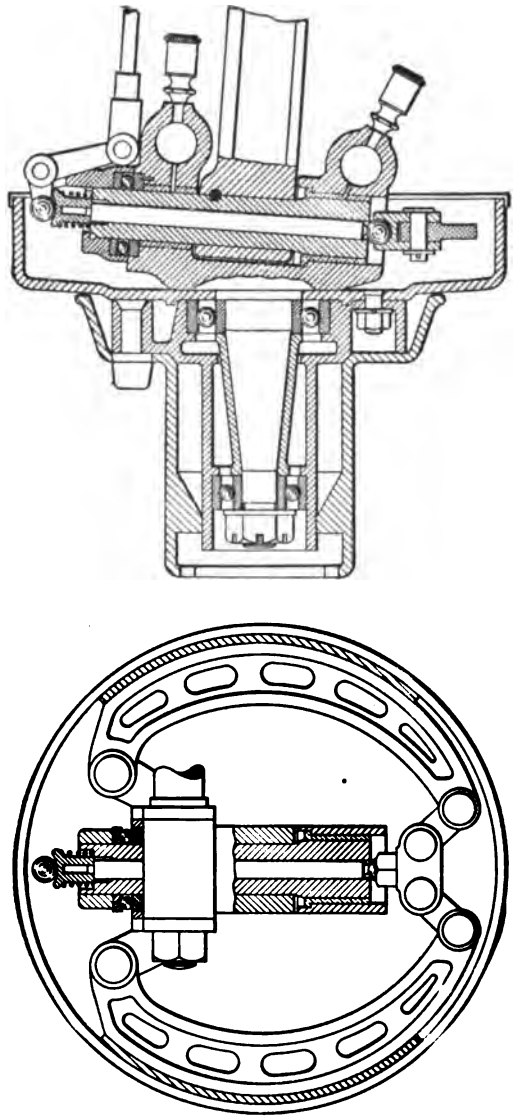

FIG. 254.—FRONT WHEEL BRAKES.

as the load is put on, and the truck will begin to move down hill; or, in the opposite case, the connecting linkage may be put under such tension by the load as to make it difficult to disengage the brake lever after the truck is loaded.

As the springs compress and distend, the rear axle and every part supported by it move in circular paths around the axis of the forward radius rod connection. Therefore, in order to obviate any influence of spring action on the application of the brakes, the centre *D* of the forward brake rod connection should lie in the axis of the forward radius rod connection. This, however, is generally impossible in practice. The best practical solution of the problem is to place the forward connection *D* of the brake rod on the line connecting the axis *O* of the forward radius rod connection with the point *P* representing the mean position of the centre of the rear brake rod connection with relation to the frame, as shown in Fig. 225. The forward brake rod connection *D* may be either forward or to the rear of the forward radius rod connection *O*, but should be as close to it as conditions will permit. Fig. 253, which is taken from an article by Edward L. Martin in THE HORSELESS AGE of September 4, 1912, shows in the sub-figure that there is still a slight effect of the spring action on the brake, but with relatively long brake rods it is negligible. When *D* is located above the line *O P* (as shown at *D'*) the brakes tighten when the load is removed; when *D* is below *O P*, the brakes loosen when the load is removed.

Front Wheel Brakes—Front wheel brakes came into vogue in England in 1909 and are still being fitted to perhaps a dozen British and Continental cars, but there does not appear to be any likelihood that they will become universal. When such brakes are used in conjunction with rear wheel brakes, the whole weight of the car and load is available for braking purposes, and it should be possible to stop a car in substantially half the distance as with brakes on one set of wheels only. The chief advantage of front wheel over rear wheel brakes is that the former do not tend to cause the car to skid. Another advantage claimed for them is that their use tends to equalize the wear on front and rear tires.

In this connection an explanation of why the application of brakes acting through the rear wheels tends to cause the car to skid may be of interest. A wheel can rotate and progress along the road by rotation only in its own plane, and this plane for the rear wheels is determined by the motion of the front

wheels, which latter is controlled by the driver. Hence, while the wheels rotate they have a directing tendency, but as soon as they are locked and begin to slide they lose all directing tendency—unless they happen to be in deep ruts—because on a hard, slippery surface the wheels will slide just as easily sideways as in the direction of their plane. Skidding, of course, occurs only when the road surface is slippery. When the brake is applied while the car is traveling on such roads it takes very little effort to lock the wheels. The car is then kept in motion by the force of inertia, which acts at its centre of gravity. This is opposed by the resistances encountered by the four wheels and it is, of course, quite possible that the resultant of these four resistance forces does not pass through the centre of gravity of the car. We then have a couple which tends to swing the car around, and as the rear wheels will slide as easily sideways as forwards, the smallest couple of this kind will start skidding.

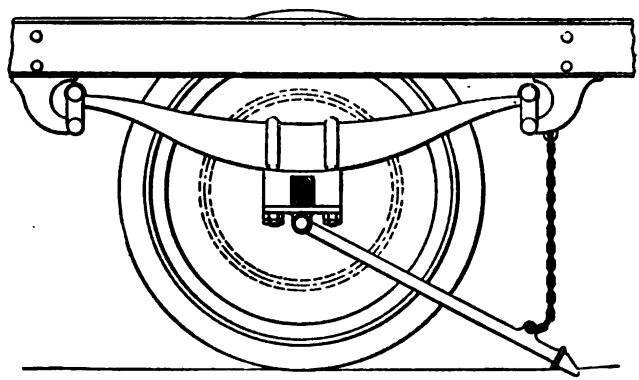

FIG. 255.—SPRAG.

However, the fitting of brakes to front wheels involves many mechanical difficulties and none of the designs that have come to the writer's attention are free from weak points. In the first place, the steering pivot axis produced must pass through the ground contact of the tires, as otherwise any difference in the retarding action of the two brakes will affect the steering. To prevent such interference with the steering either the steering pivots may be placed inside the hub of the wheel or else the steering pivot or both it and the wheel may be inclined so as to insure intersection of the pivot axis and wheel centre plane at the ground contact.

Special difficulties are involved in transmitting the operating motion to the brake segments, because of the pivotal motion of the brakes. One member of the operating linkage usually passes through a hollow steering pivot pin. The manner in which the problem has been solved by the designer of the Crossley car is illustrated in Fig. 254. A toggle expanding mechanism is used, a pin passing through the hollow-inclined steering pivot pin connecting with the toggle links through a ball and socket joint. The top end of this operating pin is provided with a flange and surrounded by a return spring, and is pressed against by the ball ended arm of a bell crank fulcrumed on the steering fork. The other arm of this bell crank connects by a short link to a point on the vehicle frame.

It seems that the torque on the front axle produced by the application of front wheel brakes is always taken up by the front springs, no special torque members being provided. Front wheel braking therefore imposes additional strains upon the axle, springs and steering connections, and in most cars these parts would have to be strengthened if front wheel brakes were to be fitted.

Sprags.—It has been customary among European designers to fit touring cars with sprags to prevent them from running backward down hill. Owing to the fact that the brakes now fitted are entirely reliable as regards checking both forward and rearward motion, the sprag has largely disappeared from pleasure cars, but it seems to become a standard fitment of motor trucks. This may possibly be due to the fact that in many motor trucks the rear wheel brake connections are so arranged that the brakes will loosen either on loading the truck or on unloading it. At any rate, with a heavy vehicle which occasionally has to be stopped and loaded or unloaded on very steep grades, it is certainly a good plan to have a variety of stopping devices.

The ordinary sprag consists merely of a straight steel rod hinged to the axle or a fitting thereon, at its forward end, and pointed or wedge-shaped at its rear end, which is designed to dig into the road surface. The sprag is generally formed with a flange near its lower end, to prevent it from sinking too far into the ground. Sprags are made of such a length that when the free end rests on the ground their horizontal projection is equal to 1.75—two times its vertical projection. Generally two sprags are used, one near each body spring.

CHAPTER XIV.

FRONT AXLES.

Front axles for pleasure cars are almost invariably drop forged from medium carbon steel, heat treated. The material, when thus treated, has a tensile strength of 90,000 to 100,000 pounds per square inch and may be worked at 10,000 pounds per square inch. If high tensile alloy steel is used, the stress may be as high as 15,000 pounds per square inch The axles are always of the pivoted type, the wheel spindles being made separate from the middle part of the axle and connected with it by a substantially vertical pivot joint, thus forming so-called Ackerman steering axles. A few use tubular axles with drop forged steering heads or axle ends secured to them. Pressed steel front axles consisting of either a single channel or two channels fitted into each other and having the steering head riveted to them are used to some extent. Front axles for commercial vehicles are generally forged of medium carbon steel, of either solid rectangular section or of I-section approaching a full rectangular section. Cast steel front axles are also used for commercial vehicles. If the axle is forged from medium carbon steel under a steam hammer a stress of 15,000 pounds per square inch can be allowed, but in a cast steel axle the stress should not exceed 10,000 pounds per square inch. Russell Huff (S. A. E. Bulletin, July, 1916) found the average factor of safety in front axles, based on the elastic limit, to be 5.8.

Stresses on Front Axles—When the car is at rest the front axle is subjected to bending moments in a vertical plane, due to the weight resting on the springs and to its own weight. When the car is in motion there is also a horizontal bending moment, due to the resistance to motion encountered by the front wheel. This horizontal moment is comparatively slight when the car is running on a smooth, level highway, but assumes considerable values when the front wheel strikes an obstruction. The exact limiting value of this horizontal moment is impossible of determination, but accumulated experience has shown a certain

proportion between the vertical resisting moment and the horizontal resisting moment of the axle section to be desirable.

Owing to the small weight of the axle itself as compared with the weight resting on the springs, the former may be neglected. Of course, when a new car is being designed, the weight that will come on the front axle is not known in advance, but for pleasure cars it may be predetermined with sufficient accuracy for the present purpose by means of the following equation:

$$W = \frac{\textit{wheel base}^3}{10} + 200 \textit{ pounds.}$$

In the case of trucks, unless a similarly proportioned vehicle on hand permits of making a direct determination of the distribution of the weight between the two axles, it may be estimated that three-eighths of the combined weight of the truck and load is carried on the front axle, and five-eighths on the rear axle. The approximate weights of commercial vehicles are as follows:

Load capacity (pounds)	1,500	2,000	3,000	4,000	6,000	10,000
Chassis weight (pounds)	2,400	3,000	3,500	4,500	6,000	8,000
Body weight (pounds).	750	900	1,050	1,200	1,500	1,800

In the great majority of cars this weight is supported on the axle through the intermediary of two body springs, and one-half of it rests on each spring saddle. The front axle itself is supported at the centre of the front wheel, and therefore forms a simple beam with two symmetrically located loads.

Front springs are invariably placed directly underneath the frame side members and this determines the position of the spring seats. The width of the forward end of the frame, in turn, is determined by the maximum steering motion of the front wheels desired. The spring seats are generally forged integral with the axle, though occasionally they are bolted on, in which case the axle is formed with lugs for the bolt holes. Between spring seats practically all axles have a downward curve or drop, the object being to insure proper clearance for the radiator or whatever other part comes directly above it.

In the conventional design of chassis the only connection between the front axle and the frame is through the front springs, but a few cars having unusual types of springs, such as single cross springs or coiled springs, have distance rods between the front axle and frame to transmit the driving thrust to the axle. Hence, neglecting the weight of the front axle itself, in the conventional design all the forces acting at the ground contact of the wheels are transmitted to the frame through the springs, the horizontal forces as well as the vertical forces. The vertical

bending moment increases from nothing in the centre plane of the wheel to the maximum at the centre of the spring seat and remains at the maximum between spring seats. The horizontal bending moment, which may attain considerable values when one wheel strikes an obstruction, increases from nothing in the centre plane of the wheel to a maximum at the centre of the spring seat. In the case of an axle connected to the frame by semi-elliptic springs it practically ceases at the spring seat, being taken up by the spring. On the other hand, in the case of an axle connected to the frame by distance rods, the horizontal bending moment due to forces on one wheel reaches its maximum at the centre of the spring seat and decreases to nothing at the centre of the other spring seat. In order to give I-section axles the necessary strength to withstand considerable horizontal shocks on the wheels, it is customary to gradually increase the width of the top flange from the steering head toward the spring seat. In an axle which connects to the frame only by semi-elliptic springs this widening stops at the spring seat, and that part of the axle between spring seats is made of uniform section throughout. On the other hand, in an axle connected to the frame by distance rods the flanges of the axle should increase in width as they approach the distance rod connection from both sides.

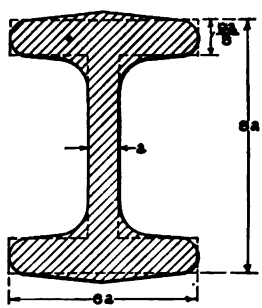

FIG. 256.—I-SECTION OF FRONT AXLE.

I-Section Axles—The proportions of the I-section vary considerably in different makes of axles, but the section shown in Fig. 256 is a good average. Denoting the thickness of the web by a, the width of the section is $6a$ and the height slightly over $8a$. The ends of the flanges are semi-circular, of radius $a/2$, and the fillet between web and flange has a radius a. The sides of the flanges are inclined 7 degrees to give the necessary draught. The dotted figure represents an equivalent geometric section, and in this the height is exactly 8 times the thickness of the web. The thickness of the flange of the geometric equivalent section is $\frac{3}{4}a$. The moment of inertia of such a section is

$$\frac{6a \times (8a)^3 - 2 \times 2.5a \times (5\frac{1}{4}a)^3}{12} = 188\,a^4$$

The distance c of the outermost fibre from the neutral section being 4 a, the section modulus is

$$\frac{177\,a^4}{4\,a} = 44.25\,a^3$$

The moment of inertia of this same section around a vertical axis is

$$\frac{2 \times \frac{3}{4}\,a \times (6\,a)^3 + 5\,\frac{3}{4}\,a \times a^3}{12} = 49.31\,a^4$$

and since the distance c in this case is 3 a, the horizontal section modulus is

$$\frac{49.31\,a^4}{3\,a} = 16.44\,a^3$$

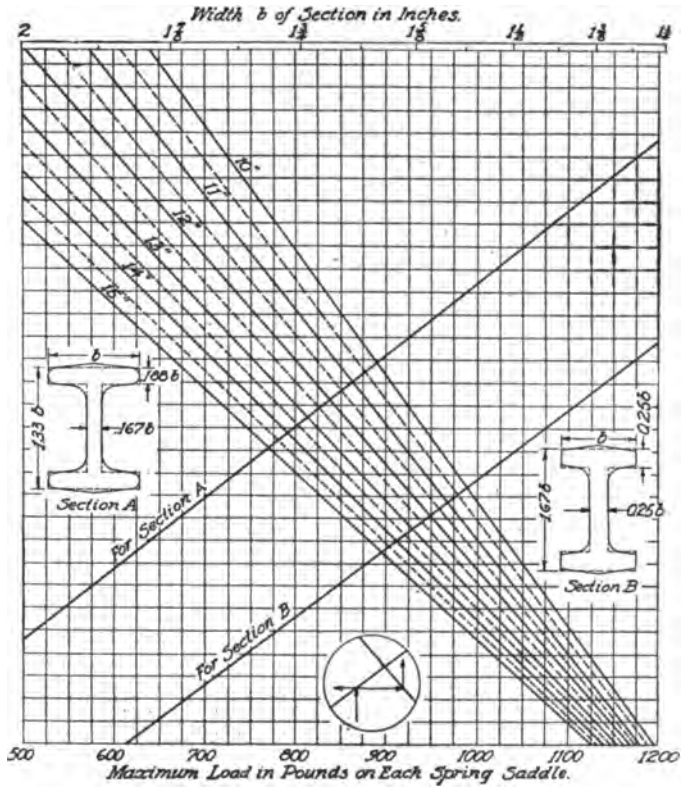

CHART III FOR DETERMINING FRONT AXLE DIMENSIONS.

The section modulus is a measure of the strength of the section, and the section shown in Fig. 256 therefore is three times as strong vertically as horizontally.

Chart III permits of quickly determining the necessary section of axle for any load on the spring pads and any distance between the centres of the spring pad and wheel centre. In addition to the section above discussed, another, somewhat fuller section, which was found to be the mean of a large number of American front axle sections in 1907, is also drawn in, and the diagram also permits of determining the necessary dimensions of this section for various loads and lever arms. It should be

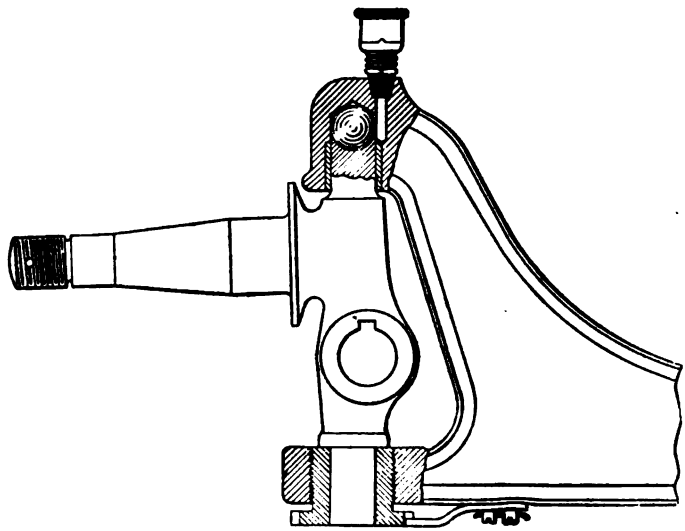

FIG. 257.—ELLIOTT TYPE STEERING HEAD WITH INTEGRAL PIVOT PINS.

pointed out that the diagram is based on a unit stress of 10,000 pounds per square inch.

Steering Heads.—There are three types of steering heads now in use, known, respectively, as the Elliott, the reverse Elliott and the Lemoine. In American practice the Elliott type is most extensively used and the Lemoine least. In the Elliott type the ends of the axle forging are forked and the steering knuckle is T-shaped; in the reversed Elliott type the steering knuckle is forked and the ends of the axle forms a T. In the Lemoine type the ends of the axle as well as the steering knuckles form Ls.

Elliott Type—The spread of the fork in Elliott type steering heads varies with the moment of the ground reaction on the wheels at the centre of the steering pivot. The minimum distance between the branches of the fork is about 4 inches. For a moment of 3,000 lbs.-ins. it can be made 4½ inches, and one inch more for each additional 3,000 lbs.-ins.

There are several different designs of Elliott type steering heads and knuckles. In the first place, the knuckle may either be provided with integral bearing pins which extend through bearing holes in the fork arms of the axle, or its vertical member

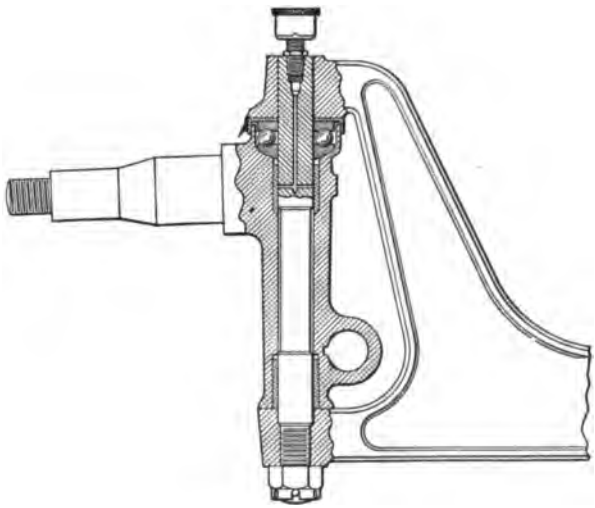

FIG. 258.—ELLIOTT TYPE STEERING HEAD WITH PIVOT PIN BEARINGS IN KNUCKLE.

may be drilled for a steering pivot pin. In case the latter construction is adopted the pin may have a bearing either in the fork ends or in the vertical member of the knuckle. A design of steering knuckle with integral bearing pins is illustrated in Fig. 257. The lower arm of the fork has a hole drilled through it larger in diameter than the vertical member of the knuckle. The bearing pin at the lower end of the knuckle is considerably smaller in diameter than this hole, and the remaining space is taken up by a bearing bushing screwed into the hole and locked in place. In this particular design of front axle the vertical load is transmitted from the axle to the knuckle through a single steel

ball of large diameter, which rests in the end of the drill hole in the upper arm of the steering fork and on a spherical depression on top of the vertical member of the knuckle. The steering arm in this case is bolted right through the vertical member of the knuckle. It can easily be seen that the entire vertical load is taken by the upper arm of the fork, and the latter must be proportioned accordingly.

A design of steering knuckle in which a pivot pin passes through the vertical member of the knuckle is shown in Fig. 258. The pin has its bearings in the knuckle and is a tight fit in the fork

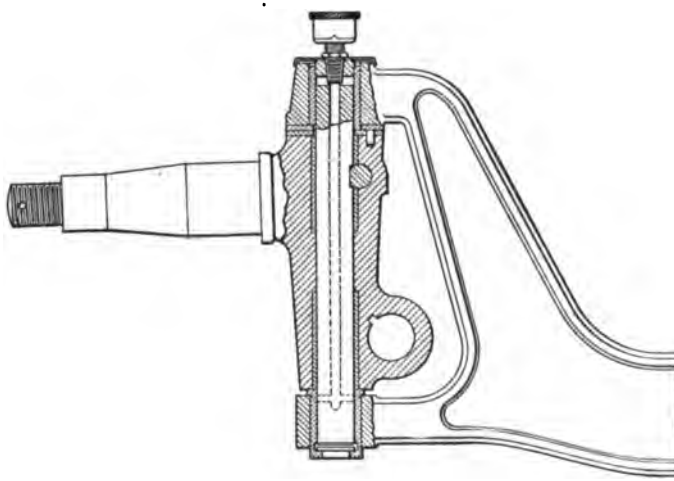

FIG. 259.—ELLIOTT TYPE STEERING HEAD WITH BEARINGS IN STEERING FORK.

arms. The pivot bolt is bolted into the lower arm of the fork, being shouldered and provided with a castellated nut at the bottom, and is drilled for a small grease cup. Bearing bushings are inserted into the vertical member of the knuckle from each end, and at the top there is a ball thrust bearing for carrying the weight. The steering arm is bolted into a lug on the lower end of the vertical member.

A third design in which the bearings for the pivot pin are in the fork arms is shown in Fig. 259.

Other Types.—Fig. 260 illustrates the reversed Elliott type of steering head and knuckle, which type was introduced by the German Daimler Co., and is used most extensively on foreign

cars. The bearings are always in the knuckle fork, and are provided with hardened steel bushings. A ball thrust bearing may be fitted as shown, but the majority of steering heads of this type have plain thrust bearings, notwithstanding the fact that they are used particularly on high grade cars. With a reverse Elliott steering head the distance from the centre of the wheel to the centre line of the pivot is necessarily somewhat larger than with other types, and a ball thrust bearing tends to further increase this distance, which is probably the reason it is generally dispensed with. This difficulty is neatly overcome in several English cars. The pivot pin is enlarged at the lower bearing, so as to form a shoulder which bears against the under surface of

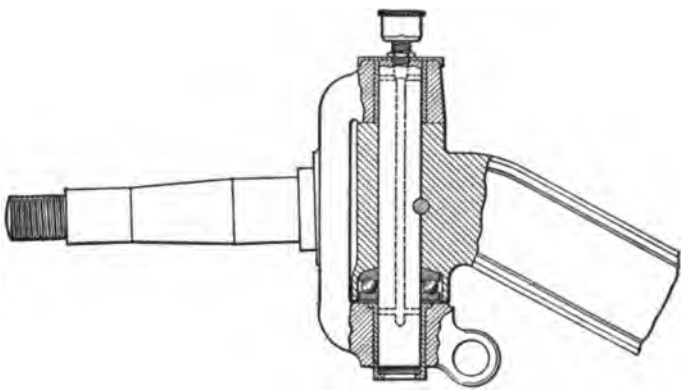

FIG. 260.—REVERSED ELLIOTT TYPE STEERING HEAD.

the steering head, and the ball thrust bearing surrounds the pin on top of the steering knuckle, being held in place by means of a castellated nut on the pin. The whole is surmounted by a sheet metal cap. In this construction, therefore, the end thrust is transmitted through the pivot pin.

In order to make the distance between wheel centre and pivot axis as small as possible, the vertical part of the fork is generally made of such a cross section as to partly envelop the steering head. The height of the steering head with the reverse Elliott type of axle is generally little greater than the height of the axle section. This is considerably less than the spread of the fork in a corresponding Elliott type axle. But the pivot pin diameter and the length of the bearings are made correspondingly larger in the former.

The Lemoine type of steering head was formerly much used in France, but is now rarely met with. Fig. 261 illustrates the Winton steering head, which is of this type. In this particular design the thrust load and part of the radial load on the bearing are taken up on a tapered roller bearing, the remaining radial load being taken up on a conical bearing. In all steering knuckles a liberal fillet should be provided where the wheel spindle joins the vertical member. As ball and roller bearings have only a slight chamfer a washer is sometimes placed between the shoulder on the spindle and the bearing.

Calculations of Pivot Bearings—In the illustrations, Figs. 257

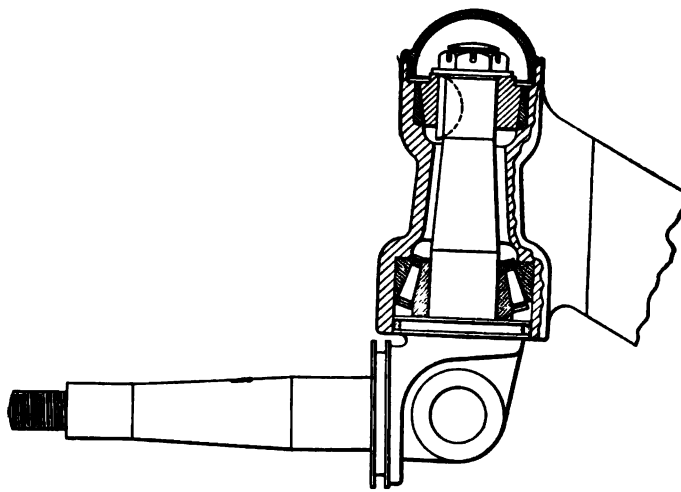

FIG. 261.—LEMOINE TYPE OF STEERING HEAD (WINTON).

to 261, various methods for taking up the thrust load are shown. This thrust load is relatively large, equal to the weight carried by one wheel when the car is at rest or running over a smooth road surface, and is increased by shocks on uneven pavement. The simplest plan consists in providing two hardened steel thrust washers between the vertical member of the steering knuckle and the steering head. One washer must be secured by a pin to the knuckle and the other to the steering head, so that the motion will take place between the two hardened surfaces and not between one hardened and one soft surface. The bearing surface of the thrust washers should be made about one square inch per 400 pounds load. In case a ball thrust bearing

is used its rated load capacity should preferably be 50 per cent. greater than the maximum load on each front wheel, though considerations of space limitation often compel the use of smaller bearings.

The load on the radial bearings of the steering pivot may be calculated as follows (Fig. 262): Let P represent the maximum reaction of the wheel on the knuckle spindle; a the distance from the centre plane of the wheel to the axis of the pivot; l the distance between centres of radial bearings, and P' the load on each radial bearing.

Then

$$Pa = P'l$$

and

$$P' = P\frac{a}{l}$$

There is, however, still another load on the radial bearings of the pivot; namely, that due to the resistance to motion encountered by the front wheel. The resistance may attain quite high values when the front wheel strikes a large obstruction while the car is going at considerable speed, but the resulting bearing pressure lasts only for a moment and, therefore, need not be considered in determining the necessary bearing surface. The resistance to motion on smooth, hard, level roads throws a load on the pivot which is absolutely negligible in comparison with that due to the weight on the wheel. The radial bearings can be so proportioned that the unit bearing pressure is about 500 pounds per square inch. Usually the length of the bearings is about 1.5 times the diameter d. If this relation holds, then

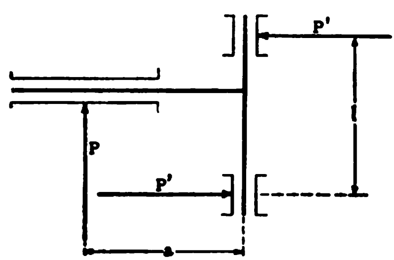

FIG. 262.—DIAGRAM FOR CALCULATING STEERING PIVOT LOADS.

$$A = 1.5\,d^2 = \frac{P'}{500} = \frac{P}{500} \times \frac{a}{l}$$

Hence

$$d = \sqrt{\frac{P}{750} \times \frac{a}{l}} \qquad \text{(62)}$$

If this diameter is chosen for the pin, the latter will be strong enough to resist the shearing stress to which it is subjected.

The pivot axis is sometimes inclined in the vertical plane through the centre of the front axle, in order to bring the point of its intersection with the ground closer to the centre of wheel contact on the ground. This distance forms the lever arm at the end of which the resistance to motion of the front wheels acts when the driver attempts to swing them around for steering. The shorter this lever arm the easier the car will be to steer, and some manufacturers incline the spindle so much that its axis produced meets the ground at the centre of wheel contact, in which case the length of the lever arm is nil (Fig. 263). How-

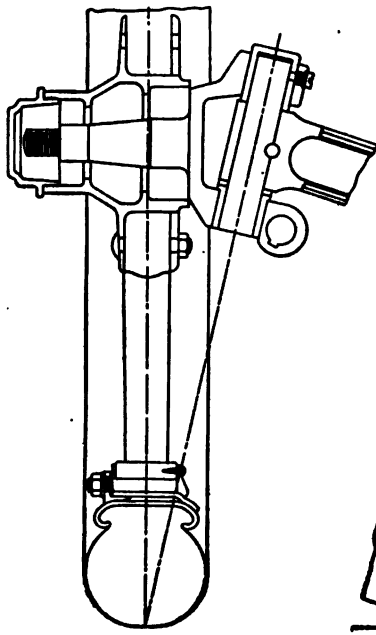

FIG. 263.—INCLINED STEERING PIVOT.

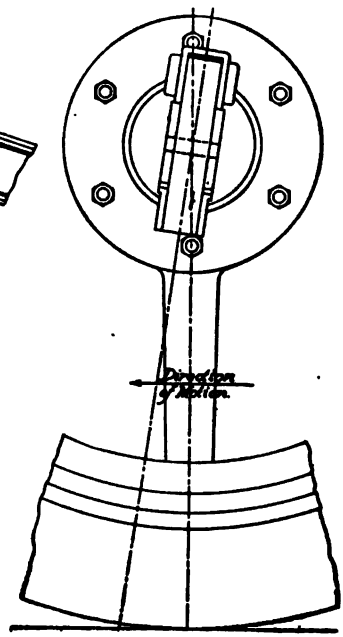

FIG. 264.—FORE AND AFT INCLINED STEERING PIVOT PRODUCING TRAILER EFFECT.

ever, this construction has the disadvantage that in any but the straight-ahead position the front wheels are considerably inclined, in which position they are not as strong with respect to vertical loads as when standing vertically.

Some manufacturers also incline the axles and steering pivots in a vertical fore-and-aft plane (Fig. 264). There are two rea-

sons for this practice. The first is that the combined load due to the weight on the axle and the road resistance encountered by the wheel is in a slightly inclined direction, and in the case of an I-section axle, of course, there is an advantage in making the plane of maximum strength of the axle coincide with the direction of the load. The other reason—and probably the more important one—is that this construction produces a trailer effect and tends to obviate serious consequences in the event of breakage or disconnection of the steering linkage. This effect is similar to that obtained with the front wheel of a bicycle, whereby a cyclist is enabled to ride with his hands off the handle bar. The point of wheel contact with the ground is located to the rear of the point at which the steering spindle axis produced meets the ground, hence the steering wheels trail and are automatically kept in the straight ahead position by the road resistance. The same effect can also be obtained by placing the axis of the knuckle

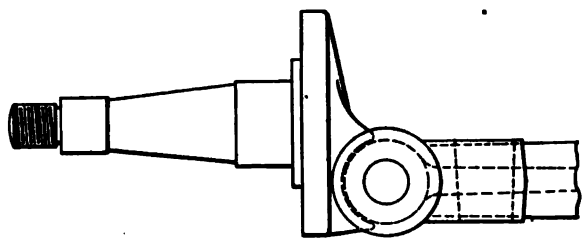

FIG. 265.—STEERING KNUCKLE WITH SPINDLE SET BACK FROM PIVOT AXIS.

spindle slightly to the rear of the pivot axis, as shown in Fig. 265. This latter arrangement has been used to quite an extent in France in connection with built-up knuckles, the wheel spindle being bolted to the vertical member of the knuckle.

Front Wheel Bearings—All of the different types of anti-friction bearings are used in front wheels. There is considerable end thrust on the front wheel bearings, and in case radial ball or parallel type roller bearings are used, separate thrust bearings for thrusts in both directions should preferably be fitted, at least on heavy vehicles. It is not always fully realized that there are heavy thrusts on front wheel bearings. Rear axles are often without any thrust bearings except the one designed to take up the thrust of the bevel gear, and from this it is sometimes erroneously inferred that there is no need for thrust bearings in the front wheels either. The difference is that whereas the propelling effort is always parallel to the planes of the rear wheels,

in turning a corner it may make an angle of 30 to 40 degrees with the planes of the front wheels. The radial load on the bearing due to the force of propulsion is proportional to the cosine of the angle between the direction of the propelling force and the plane of the wheel, and the thrust load is proportional to the sine of this angle. Therefore, if the wheel stands at an angle of 45 degrees, the thrust load due to the propelling force is equal to the radial load due to that force. A factor tending to aggravate the case with respect to thrust load is that when rounding a curve at considerable speed the centrifugal force throws nearly all of the weight of the car on the outer wheels, and the propelling force on the outer forward wheel is increased in the proportion of the weight on it. The thrust load being proportional to the propelling force, it is also increased by this effect. There is, moreover, a thrust load on the front wheel bearings due to the centrifugal force. In fact, this whole force acts as a thrust load, since it acts in the direction of the turning radius and the axes of all the wheel spindles theoretically constitute radii of the turning circle. On a smooth, hard, level surface the end thrust on the wheel bearings is limited by the adherence of the wheels to the ground, which is about 0.6 of the weight upon them on most kinds of pavement. So far as the end thrust due to centrifugal force is concerned, it is the same for the front and rear wheel bearings, for unit weight upon them, but the front wheel bearings in addition are subjected to end thrust due to the propelling force, from which the rear wheel bearings are free.

Thrust Loads—The usual formula for centrifugal force is

$$F = 1.226\, w\, n^2\, r$$

where w is the weight in pounds, n the number of revolutions per second and r the radius in feet. If the speed v is expressed in miles per hour the car makes

$$\frac{5{,}280}{3{,}600} v \text{ feet per second.}$$

and the circumference of the circle being $2\,\pi\,r$ feet, the car will turn at the rate of

$$\frac{2\,\pi\,r}{\frac{5{,}280}{3{,}600}\,v} = \frac{r}{0.2334\,v} \text{ revolutions per second.}$$

Substituting this value for n in the expression for centrifugal force we get

$$F = \frac{0.0668\, w\, v^2}{r} \qquad (63)$$

We will assume a car weighing with passengers 3,000 pounds, whose centre of gravity is 24 inches high, rounding a corner at a radius of 60 feet. The centrifugal force necessary to overturn this car, with a tread of 56 inches, would be

$$3{,}000 \times \frac{28}{24} = 3{,}500 \textit{ pounds}$$

To find the speed at which the car would turn over we put

$$\frac{0.0668 \times 3{,}000 \times v^2}{60} = 3{,}500$$

$$v = \sqrt{\frac{3{,}500 \times 60}{3{,}000 \times 0.0686}} = 32.4 \textit{ miles per hour}$$

Of course the car would turn over only if the ground adherence was sufficient to prevent skidding. We will now suppose that the car turns the corner at about half this speed, say 15 m. p. h. Also, that the weight resting on the front wheels is 1,200 pounds. Then the centrifugal force on this weight will be

$$\frac{0.0668 \times 1{,}200 \times 15 \times 15}{60} = 300 \textit{ pounds}.$$

The centrifugal force of 300 pounds acting at the centre of gravity will have the effect of removing

$$\frac{300 \times 24}{56} = 128 \textit{ pounds}.$$

from the inner wheel and adding it to that on the outer wheel, thus making the weight distribution 472 pounds on the inner wheel, and 728 pounds on the outer. The resistance to motion of the outer wheel will thus be increased in the ratio of 728 to 600. Furthermore, the propelling effort applied to the front wheels acts at an angle whose sine is approximately 1-6, assuming that the car has a wheel base of 10 feet, and the thrust load on the bearings is one-sixth of the propelling force.

It is impossible to make a close calculation of the thrust on the front wheel bearings under any given conditions, because of the effect of the road surface and the uncertain distribution of the thrust between the inner and outer wheel bearings, but the point to be remembered is that whenever the car describes a curve there is end thrust on the front wheel bearings, even with the power shut off, because of the centrifugal force; if the motor is propelling the car there is additional end thrust, owing to the oblique application of the propelling force to the front wheels.

Mounting of Bearings—Because of the simple construction, combined radial and thrust bearings are much used for front wheels, such as Timken roller, New Departure, cup and cone,

etc. The mounting of such bearings presents no particular difficulty. If they are of the adjustable type the bearings are arranged with their outer races pressing endwise against internal flanges on the hub between a shoulder and a nut on the knuckle spindle, as shown in Fig. 266. The adjusting nut, of course, must be properly locked. Lubricant is retained within the hub by the hub cap at the outer end and a dust washer on the inner end. The bearings are usually so placed that from two-thirds to three-quarters of the load comes on the inside one, though there is considerable variation in this respect. Of course, the aim always is to bring the centre plane of the wheel as close to the pivot axis as possible. A clearance of about one-quarter inch should be allowed between the vertical member of the knuckle or the steering head and the nearest part of the wheel hub.

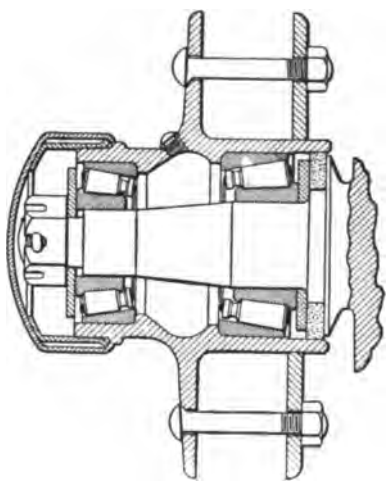

FIG. 266.—MOUNTING OF FRONT WHEEL ADJUSTABLE BEARINGS.

The outer bearing serves mainly as a steadying bearing and must be placed at a considerable distance from the inner one to properly serve its purpose. Adjustable roller bearings on pleasure car axles are placed at 3 to 3½ inch centre distance, while ball bearings are placed at 4 to 5 inch centre distance. For oiling, a spring closed oil cup is usually placed on the hub. A much used method of introducing lubricant into the front hubs consists in removing the hub caps, filling them with grease and replacing them.

There are many light cars in use employing only two radial ball bearings in the front wheels. Where radial bearings only are used, both races of one kind should be firmly secured against endwise motion, as well as one race of the other kind, the remaining race being left free endwise. Some designers clamp the two inner races tight on the spindle and place the inner faces of the outer races against internal flanges of the hub. With this

construction, if the distance between the outer faces of the two flanges and the length of the spacer between the inner races are different, a permanent side thrust is put on the bearings, which causes them to work hard.

A neat mounting of radial and thrust bearings for front wheel hubs, due to F. G. Barrett, of England, is illustrated in Fig. 267. In this design the two outer races of the radial bearings are clamped in the hub, as is the middle race of the thrust bearing. Both inner races of the radial bearings are free. The two thrust bearings are assembled on a sleeve which fits closely over the

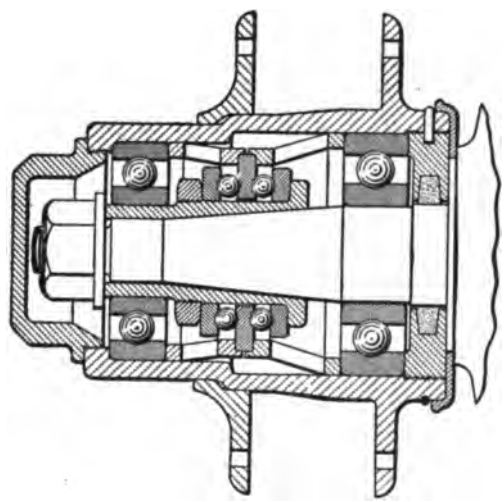

FIG. 267.—MOUNTING OF FRONT WHEEL RADIAL AND THRUST BALL BEARINGS

tapered portion of the knuckle spindle and is held in place by the nut on the end of the spindle.

A good solution of the front wheel bearing problem seems to consist in the use of a radial bearing at the outer end and a so-called two row bearing, designed to take both radial and thrust loads, at the inner end. Both inner races are then secured endwise, while the outer race of the radial bearing is left free endwise.

Steering Spindle "Set"—The spindle of a steering knuckle is arranged to make a slight angle with the horizontal, chiefly to

allow for flexure of the axle and play in the knuckle joints when the axle is under load. In American practice it is common to have the knuckle spindle make an angle of about two degrees with the horizontal, if plane wheels are to be used. If dished wheels are to be used the angle may be as much as 6 degrees.

Spindle Diameter—As regards the diameter of the knuckle spindle, this is generally determined by the bore of the bearings; that is to say, if the bearings are large enough to withstand the load upon them, a spindle fitting their bore will easily withstand the bending moments on it. When radial ball bearings are used the medium series is usually selected. Russell Huff, whose paper on factors of safety was referred to in the foregoing, found the

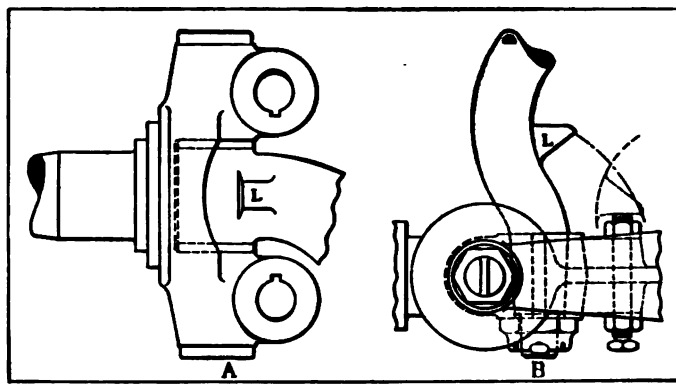

FIG. 268.—STEERING MOTION STOPS.

average factor of safety in the steering spindles at the bearing shoulder to be 26.1.

Steering Stops—A little refinement that has been applied in a number of axles in recent years is a stop limiting the swing of the steering knuckles, so as to prevent contact between the revolving wheel and the frame or the steering drag link, which is objectionable. Such a stop (L) is most easily provided in the case of a reversed Elliott type steering gear, as shown in Fig. 268 at A. At B in the same figure is shown the arrangement used in the axles of the Timken-Detroit Axle Co., which have Elliott type steering heads. In this case a lug L on the knuckle arm contacting with an adjustable stop on the axle forging limits the steering motion.

Knuckle Arms—The steering knuckles are provided with arms for interconnection of the two knuckles on opposite sides of the car by the tie rod and also for connection to the steering gear through the drag link. Of course only one of the knuckles needs to be connected to the steering gear, and usually the arm of this knuckle is made double, though occasionally, especially with reversed Elliott type steering heads, one knuckle is provided with two separate arms. The necessary length of the arms and other details will be considered in the chapter on the steering gear. It is usually necessary to bend these arms out of the

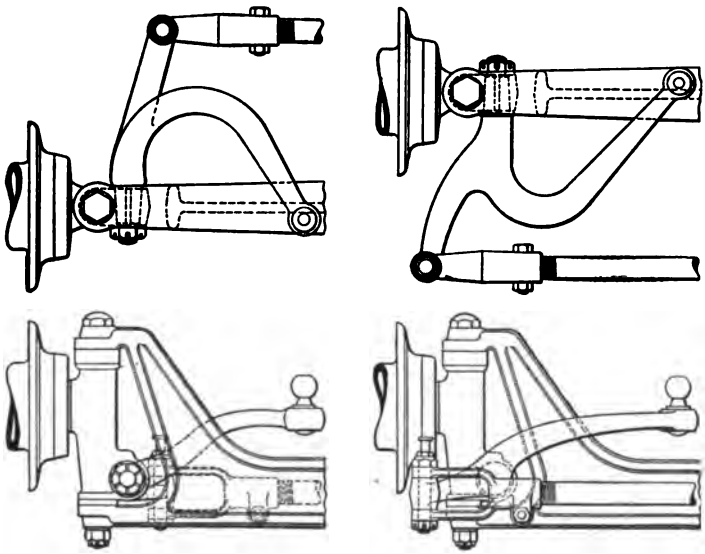

FIG. 269.—DOUBLE STEERING ARMS FOR ELLIOTT TYPE FRONT AXLE.

horizontal plane, at least with Elliott type steering heads, because the tie bar has to pass underneath the body springs and the drag link must pass either over or under the axle. Moreover, the arm for connection to the drag link must be given a considerable curve in the horizontal plane, because with the front wheel in the central or straight ahead position this arm usually extends practically in the direction of the axle, hence in an Elliott type axle it must curve around the vertical part of the steering head and it must clear this part for any position of the front wheels. Knuckle arms are secured to steering knuckles with a tapered seat, being

bolted and keyed. The taper is made about 1:10, and the nut is secured by means of a cotter pin. The key is necessary because of the crank effect due to the bend in the arm. As regards the proper size of the arm, let W represent the maximum weight on one front wheel; a the distance between the pivot axis and the centre plane of the wheel, and b the distance between the pivot

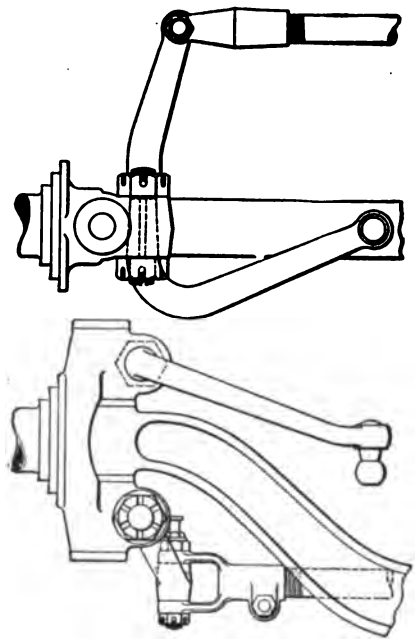

FIG. 270.—STEERING ARMS FOR REVERSE ELLIOTT TYPE FRONT AXLE.

axis and the axis of the tapered portion of the knuckle arm; then the diameter d of the larger end of the taper should be

$$d = \sqrt[3]{\frac{W\,a}{1{,}000\,b}} \quad \textit{for pleasure cars}$$

and

$$d = \sqrt[3]{\frac{W\,a}{1{,}500\,b}} \quad \textit{for trucks.}$$

The arm proper is generally made of oval section, of such size as to have the same maximum section modulus as the tapered

portion near the latter, and tapering down slightly toward the free end. Fig. 269 shows two typical designs of knuckle arms, the one on the left being for axles in which the tie rod is located to the rear, in which case the knuckle arm must point away from the wheel, while the one on the right is for axles in which the tie rod is in front, in which case the arm must approach the wheel. Fig. 270 shows a knuckle arm designed for a reversed Elliott type of knuckle. One of the advantages of this type of steering head is that it interferes less with the arrangement of the knuckle arm.

It is a good plan to provide the knuckle arm on the driver's side with a drilled boss for the speedometer gear bracket, so as to make a rigid mounting of this bracket possible. The location of the holes is not a matter of great importance, for the reason that universally adjustable mountings for the driven gear have to be provided in any case. A drilled boss permits of rigidly fastening the bearing bracket in place so there is no danger of its being jarred loose and the mesh of the gears becoming disturbed.

Tie Rod—The rod which connects the steering knuckles on opposite sides of the car is practically always made tubular. It may be placed either in front of the axle or to the rear of it. The former arrangement has the advantage that the rod ordinarily works under tension, while with the latter it works under compression. That is to say, the road resistance encountered by the front wheels, acting through the bell cranks formed by the steering knuckles and arms, puts a tension on the tie rod with the first mentioned construction and a compression with the second. Of course, the force impressed upon the rod by the driver in steering the car produces a tension for one direction of motion and a compression for the other with both constructions. The advantage claimed for the second arrangement is that the relatively frail tie rod is much better protected from injury back of the axle than in front of it. The great majority of all cars now have the tie rod back of the front axle.

Considering the tie rod located back of the axle, the maximum compressive load may be represented by the expression

$$P = \frac{c\,W\,a}{b}$$

where c is a constant; W, the maximum weight on one front wheel; a, the distance between the centre plane of the wheel and the pivot axis, and b, the length of the knuckle arm. The rod

acts like a column with free ends, the permissible load for which is

$$P = \frac{S A}{1 + q \frac{l^2}{r^2}}$$

(Rankin's equation), where S is the safe working stress of the material; A, the sectional area of the rod; q, a constant; l, the length of the rod, and r the least radius of gyration of the section. For a solid rod,

$$r^2 = \frac{D^2}{16},$$

for a tube,

$$r^2 = \frac{D^2 + d^2}{16}.$$

Hence

$$\frac{c W a}{b} = \frac{S A}{1 + q \frac{l^2}{r^2}}$$

With the proportions obtaining in steering tie rods we may write

$$\frac{c W a}{b} = \frac{S A}{q \frac{l^2}{r^2}}$$

without committing a great error. Remembering that for a hollow circular section

$$A = \frac{\pi}{4}(D^2 - d^2)$$

and

$$r^2 = \frac{D^2 + d^2}{16},$$

we get, by substitution,

$$\frac{c W a}{b} = \frac{S \pi (D^4 - d^4)}{64 q l^2},$$

which may be transformed to read

$$\left(\frac{S \pi}{64 q c}\right)\left(D^4 - d^4\right) = \frac{W a l^2}{b}$$

All of the factors in the first pair of parentheses may be regarded as constant, and we may denote this term by C, which gives us

$$D^4 - d^4 = \frac{W l^2 a}{C b} \quad \ldots\ldots\ldots\ldots\ldots\ldots\ldots\ldots\ldots\ldots\ldots\ldots\ldots\ldots\ldots\ldots (64)$$

The value of C should be 1,000,000 for pleasure car axles with the tie rod in the rear; 1,500,000 for pleasure car axles with the tie rod in front and for truck axles with the tie rod in the rear, and 2,000,000 for truck axles with the tie rod in front. It might be argued that the above reasoning does not apply to the case of a tie rod in front of the axle, because in the latter it is normally under tension instead of under compression. However, it is the extreme conditions that determine the necessary strength of a part, and it is most likely that a tie rod in front of the axle is subjected to the greatest unit stress when the driver suddenly wrenches his steering wheel around in such a direction as to put the tie rod under compression, in case the "off" wheel is restrained from turning in that direction by a rut, etc. In using equation (64), calculate the value of the right hand term; assume a value for D, and calculate the necessary value of d. If the result is unsatisfactory assume another value for D. The wall thickness must not be chosen too small, because the tube has to be threaded for the connector. Equation (64) is intended for straight tie rods only; if the rod is cranked at the middle to clear the engine or under-pan it must be made stiffer.

The length of the tie rod is so adjusted that when the car stands on the factory floor with the front wheels in the central position, the distance apart of the wheel rims in front of the axle at the height of the spindle is from ¼ to ½ inch less than the corresponding distance back of the axle. This slight "toeing in" is intended to allow for the slight play in the joints and flexure of the members when the car is being driven on the road, so that in actual road driving the wheels will be substantially parallel.

Tie Rod Connectors—The ends of the knuckle arms swing in the same plane, and the tie rod, therefore, is connected to the arms by forked connectors. The connector (Fig. 271) is usually screwed over the end of the tie rod, its hub being split for some distance along its length and provided with clamp lugs, and it is securely clamped down on the rod. The bearing of the connector pin may either be in the knuckle arm or in the connector. In high grade cars this bearing is bushed with bronze or hardened steel, and lubricating means are provided, either a small oil cup or, preferably, a small compression grease cup. The projected bearing area should be about

$$A = \frac{W}{350}\frac{a}{b} \text{ square inches.}$$

Making the length of the bearing from two to three times the diameter gives a pin amply strong to withstand the shearing stress. Owing to the fact that the safety of the passengers depends upon the integrity of the steering linkage, the connector pin nut must be securely locked. In fact, everything pertaining to the steering mechanism must be absolutely reliable.

Tubular and Pressed Steel Axles—Tubular front axles are generally made from nickel steel tubing, which has a tensile strength of 120,000 pounds per square inch and may be worked at 12,000-15,000 pounds per square inch. Such axles have the same strength in the horizontal as in the vertical plane, and therefore are not easily bent by striking obstructions. In the case of cars with comparatively wide frames the spring seats may be forged integral with the axle ends, which are pinned and brazed or

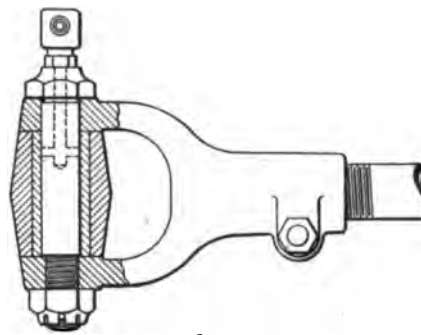

FIG. 271.—TIE ROD CONNECTOR.

merely clamped to the axle tube. Some designers prefer clamping to brazing, because in the latter process the metal is likely to be overheated and thus weakened. In smaller cars with a comparatively narrow frame this scheme is not praticable and the spring seats must be separately clamped or pinned and brazed to the tube. In pressed steel axles both the forged axle ends and the spring seats are riveted to the pressed steel part. For the axle end rivets are placed both vertically and horizontally. These pressed steel axles are made from carbon steel stock, as a rule, and with that material the stress should be limited to 10,000 pounds per square inch.

Manufacture of Front Axles—The chief machining operations on a front axle are the facing of the ends of the steering heads and the drilling and reaming of the holes for the pivot pins. The four faces of an Elliott type steering head are usually

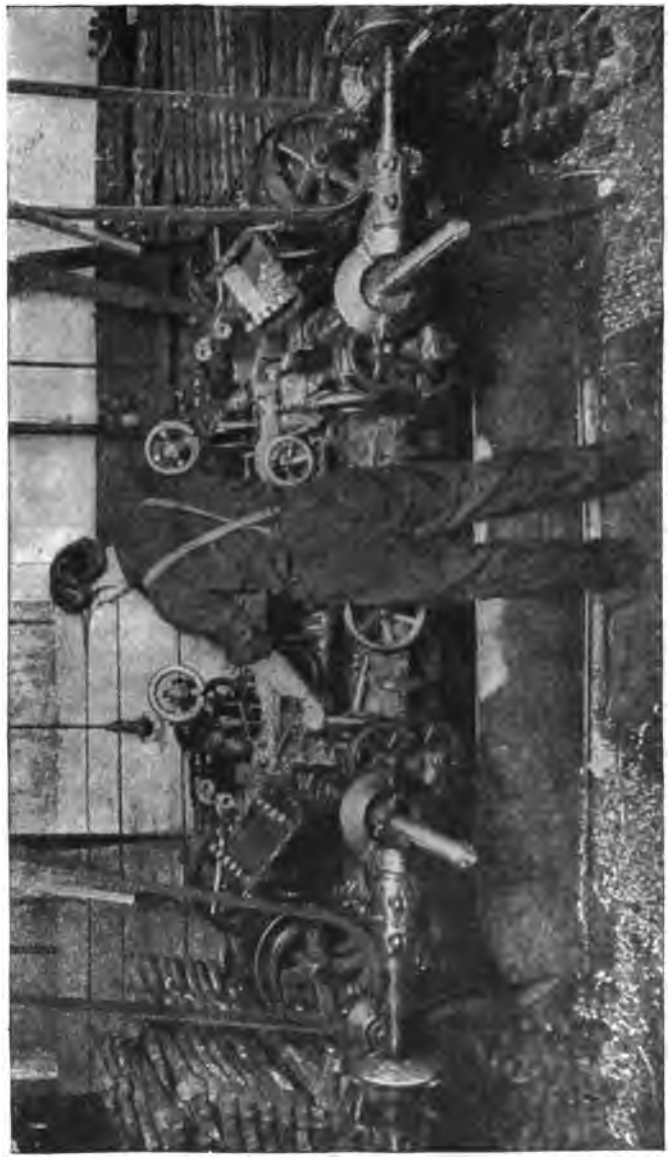

FIG. 272.—BORING AND REAMING BOTH ENDS OF A FRONT AXLE AT ONCE (TIMKEN).

faced in one operation in a milling machine by means of four milling cutters mounted on the same spindle the proper distances apart. If the production is carried on at a sufficiently large scale, a special double milling machine finishing both ends of the axle at the same time would possess considerable advantage. Fig. 272 shows the method employed at the plant of the Timken-Detroit Axle Co., Detroit, for boring and reaming the holes for the pivot pin. A special double ended machine tool is used for this purpose, which permits of finishing both ends of the axle at the same time. Each spindle of the tool is driven separately by belt from countershafts.

CHAPTER XV.

THE STEERING GEAR.

Historical—Instead of the fifth wheel steering arrangement used on horse vehicles, the divided axle is universally employed on automobiles. This was invented by Lankensperger, of Munich, in 1817. The English patent on it was taken out in the name of Rudolph Ackerman, and in English speaking countries the gear, in consequence, has come to be known as the Ackerman steering gear. A refinement of this steering mechanism for automobile purposes was introduced in 1878 by Charles Jeantaud, a French carriage builder, who devised what is known as the Jeantaud diagram. Jeantaud, it seems, recognized the principle that if the vehicle is to turn a corner without sideward slip of any of the wheels, the linkage of the steering wheels must be so arranged that the axles of all the wheels produced always intersect a common vertical line, the vertical line forming the momentary axis of rotation. Jeantaud found that in order to approximately fulfil this condition, the steering arms, instead of being parallel, must be inclined toward each other when they extend to the rear of the axle, and away from each other when they extend forward of the axle; and his diagram, which is intended to give the correct inclination of the arms, indicates that the centre lines of the arms produced should meet at the middle of the rear axle. More recent investigations of the steering problem have shown that with the ordinary trapeze form of steering linkage it is impossible to absolutely satisfy the condition of correct steering, and that for a minimum error for the whole steering range the point of intersection of the two steering arms produced lies some distance in front of the rear axle.

Theory of Steering Mechanism—In the following investigation we will denote the length of the wheel base by W; the distance between steering pivots by L; the inclination of the inner wheel axis by α; the inclination of the outer wheel axis by β; the inclination of the knuckle arms by θ; the length of the arms by l.

Referring to Fig. 273, it will be seen that

$$\frac{a\,c}{c\,d} = \cot a$$

and

$$\frac{b\,c}{c\,d} = \cot \beta$$

Hence

$$\frac{b\,c - a\,c}{c\,d}\left(= \frac{L}{W}\right) = \cot \beta - \cot a$$

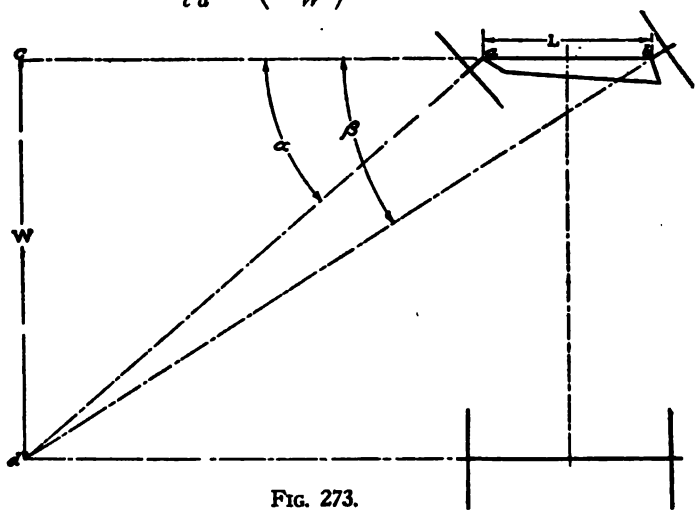

FIG. 273.

This equation enables us to plot the required values of β corresponding to different values of a for any ratio $\frac{L}{W}$. It expresses the condition which should be satisfied by the gear, but furnishes no guide as to how this may be accomplished.

Graphical Solution of Steering Problem—There is no direct analytical method for determining the most advantageous angle of the knuckle arms, and some graphical method is usually employed. By laying the steering diagram off on the drawing board to, say, half size, a sufficient degree of accuracy is attained. Unfortunately, for small deflections of the front wheels, the distance of the point of intersection of the wheel axes is so far from the axis of the car that it falls far outside the limits of an ordi-

nary drawing board, and accuracy of the linkage with small deflections is of special importance, for the reason that the wheels are turned through a small angle very much oftener than through a big angle, and the car generally runs at a much higher speed when describing curves of large than of small radius. This difficulty may be overcome as follows (Fig. 274): From points a and b, denoting the steering pivots, draw lines perpendicular to the axles which will intersect the rear axle at e and f. Next, draw a line from the middle point g of the front axle to point e. Then lines drawn from the pivot points a and b to any point on line $g\ e$ will make with the front axle corresponding steering angles. This may be proven as follows:

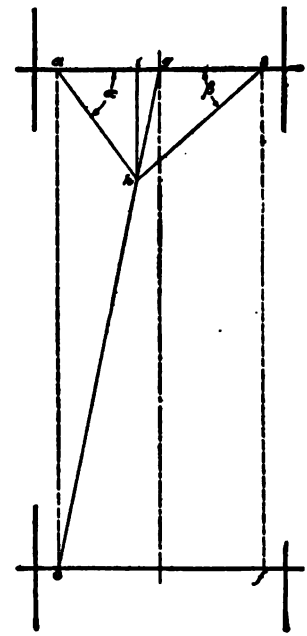

FIG. 274.

$$\cot \alpha = \frac{ai}{ih} = \frac{ag - ig}{ih},$$

and

$$\cot \beta = \frac{bi}{ih} = \frac{ag + ig}{ih}$$

$$\therefore \cot \beta - \cot \alpha = \frac{2ig}{ih}.$$

But

$$\frac{ig}{ih} = \frac{ag}{ae},$$

and substituting,

$$\cot \beta - \cot \alpha = \frac{2ag}{ae} = \frac{L}{W}$$

Now assume steering arms of a definite length and making a certain angle with the longitudinal vehicle axis. Next determine graphically the deflection of the outer wheel for various assumed deflections of the inner wheel, say, 8, 16, 24, 32, 40 and 48 degrees, for these steering arms. This has been done in Fig. 275 for two particular cases. The following dimensions were assumed in making this drawing: $L = 50$ inches; $l = 7$ inches

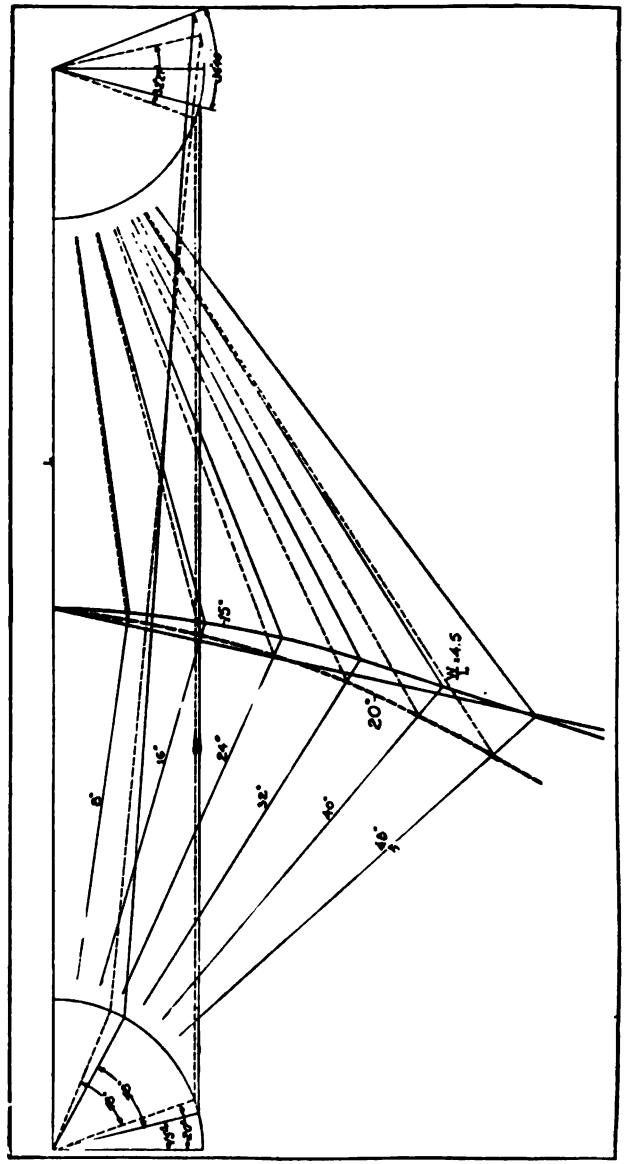

FIG. 275.

and angle Θ = 15 and 20 degrees, respectively. The values of angle β were determined graphically for values of angle α of 8, 16, 24, 32, 40 and 48 degrees, respectively. After these values of angle β had been found, corresponding angles α and β were laid off on opposite ends of the line L. Through the points of intersection of the lines describing corresponding angles were drawn curves, one for the 15 degree knuckle arms and the other for the 20 degree knuckle arms. These may be called steering error curves, because their deviation from the diagonal line $g\,e$ (Fig. 274) indicates the error in the steering angles. In Fig. 275 the diagonal $g\,e$ corresponding to the value $\frac{L}{W} = 0.45$ is drawn in. It will be seen that for small deflections the angle of the outer wheel is too large with both 15 and 20 degree knuckle arms. The 20 degree knuckle arm gives the correct deflection of the outer wheel at about 26 degrees of the inner wheel, and the 15 degree knuckle arm gives the correct deflection of the outer wheel at 46 degrees deflection of the inner wheel. Beyond these points the angle of the outer wheel is too small. It may readily be seen from this that the most advantageous angle of the knuckle arms depends upon the turning range of the inner wheel. Thus, if the motion of the inner wheel were limited to 32 degrees, the 20 degree knuckle arm would be the best, whereas if the range of motion of the inner wheel were as large as 45 degrees, the angle of the knuckle arm should be about 18 degrees—for a value of $\frac{L}{W} = 0.45$.

In order to use this method for the practical determination of the proper knuckle arm angle, steering error curves for different knuckle arm angles and lengths should be laid out very carefully for permanent use, and in any particular case the diagonal $g\,e$ corresponding to the particular value of $\frac{L}{W}$ should be placed on the chart in pencil, when the most advantageous knuckle arm angle will at once be apparent.

An Analytical Method—An ingenious analytical method of determining the deflection of the outer wheel corresponding to a given deflection of the inner wheel has been published by Herbert C. Snow (THE HORSELESS AGE of April 13, 1910). A short résumé of this method follows:

Four different cases have to be considered, viz., with the knuckle arms in front and in the rear, respectively, and with the knuckle arm angle Θ greater and less than the deflection β of

the outer wheel, respectively. In Fig. 276 the knuckle arms extend to the rear of the axle and angle Θ is greater than β. In this diagram the knuckle arms are purposely shown abnormally long, for the sake of greater clearness. Referring to the Fig.,

$$M = L - 2\,l \sin\theta$$
$$g\,e = l \sin(\alpha+\theta)$$
$$g\,a = l \cos(\alpha+\theta)$$
$$h\,i = j\,b = l \sin(\theta-\beta)$$
$$j\,f = l \cos(\theta-\beta)$$
$$g\,e + M - N + h\,i = L$$

Substituting values of $g\,e$ and $h\,i$,

$$l \sin(\alpha+\theta) + M - N + l \sin(\theta-\beta) = L$$

Substituting the value of M,

$$l \sin(\alpha+\theta) + L - 2\,l \sin\theta - N + l \sin(\theta-\beta) = L$$

Transposing and dividing by l,

$$\sin(\theta-\beta) = 2 \sin\theta - \sin(\alpha+\theta) + \frac{N}{l} \quad \ldots\ldots\ldots\ldots\ldots\ldots (65)$$

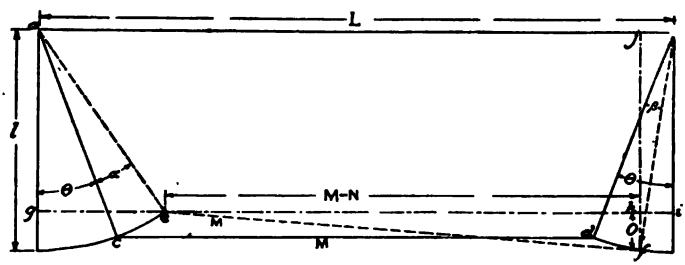

FIG. 276.

By a similar process of reasoning it is found that with β greater than Θ and the arms extending to the rear

$$\sin(\beta-\theta) = \sin(\alpha+\theta) - 2 \sin\theta - \frac{N}{l} \quad \ldots\ldots\ldots\ldots\ldots\ldots (66)$$

with β smaller than θ and the arms in front of the axle—

$$\sin(\theta-\beta) = 2 \sin\theta - \sin(\theta+\alpha) - \frac{N}{l} \quad \ldots\ldots\ldots\ldots\ldots\ldots (67)$$

and with β greater than θ and the arms in front of the axle

$$\sin(\beta-\theta) = \sin(\theta+\alpha) - 2 \sin\theta + \frac{N}{l} \quad \ldots\ldots\ldots\ldots\ldots\ldots (68)$$

These various equations cannot as yet be solved because N is not known. The value of N in terms of known factors may be found as follows: $O = j\,f - j\,h$.

When β is smaller than θ,

$$j\,f = l \cos(\theta-\beta)$$

hence

$$O = l \cos(\Theta - \beta) - l \cos(\alpha + \Theta) =$$
$$l[\cos(\Theta - \beta) - \cos(\alpha + \Theta)] \quad (69)$$

Similarly, when β is greater than Θ,

$$jf = l \cos(\beta - \Theta) \text{ and}$$
$$O = l[\cos(\beta - \Theta) - \cos(\alpha + \Theta)] \quad (70)$$

In every case

$$M - N = \sqrt{M^2 - O^2}$$

and

$$N = M - \sqrt{M^2 - O^2} \quad (71)$$

The equations thus derived permit of accurately determining the angle of the outer wheel corresponding to any angle of the inner wheel, the proportions of the linkage being given. The following example shows its method of application: Suppose the distance L between pivots to be 50 inches; the length l of the knuckle arms, 6.5 inches; Θ, 20 degrees, and α, 30 degrees, the knuckle arms extending to the rear of the axle. Then according to equation (66)

$$\sin(\beta - 20°) = \sin(20 + 30)° - 2 \sin 20° - \frac{N}{l}$$

Disregarding the term $\frac{N}{l}$ for the moment we get for a first trial value

$$\sin(\beta - 20°) = 0.082.$$
$$\beta = 24° 42'.$$

Inserting this value of β in equation (70) we get

$$O = 6.5\ (0.9966 - 0.6428) = 2.2997,$$
$$M = 50 - (2 \times 6.5 \times 0.342) = 45.56$$

and inserting these values in equation (71) we get

$$N = 0.053.$$

Now using this value N in equation (66) we get

$$\beta = 25° 10'.$$

The calculations could be continued further, but Mr. Snow has shown that the second trial value is correct within one minute in the most extreme case, which is as high a degree of accuracy as is required in practical work.

Using this method, Mr. Snow calculated the error in the steering angle for each of the turning angles 25° and 30° of the inner wheel, with the knuckle arms set at from 15° to 30°, extending both to the front and the rear, using four ratios $\frac{l}{L}$ in each case, viz., 0.10, 0.12, 0.14 and 0.16. The results

of these calculations are plotted in Charts IV and V. These charts give the best value for the angle of the knuckle arms for limiting turning angles of 33° and 40° of the outer wheel, when the values of $\frac{L}{W}$ and $\frac{l}{L}$ are known.

General Arrangement of Gears—Automobiles are steered by means of hand wheels, which in the case of pleasure cars are located at the top of a rearwardly inclined steering column, and in the case of trucks, at the top of a vertical or nearly vertical column. The spider of the hand wheel is se-

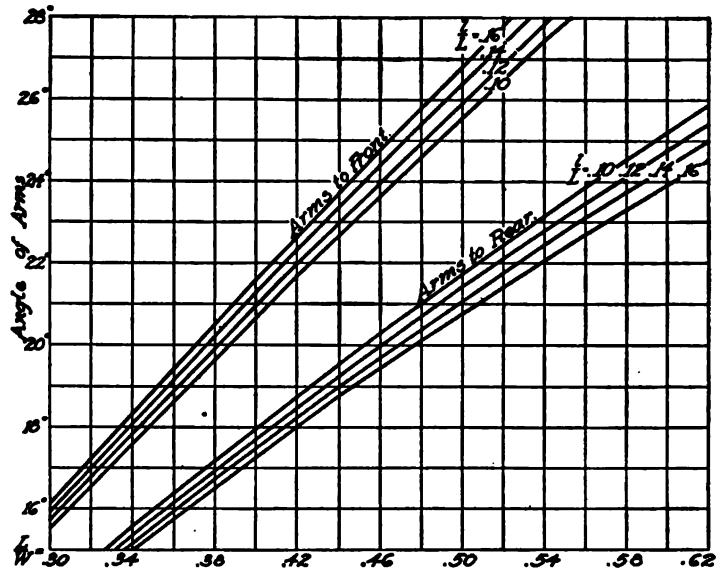

CHART IV.—PROPER KNUCKLE ARM ANGLES FOR A LIMITING DEFLECTION β OF THIRTY-THREE DEGREES.

cured to a shaft which generally passes down inside an outer stationary tube. At the bottom of the shaft is located the so-called steering mechanism which reduces the motion of the hand wheel. This, in the great majority of cases, consists of either a worm and worm wheel sector or a worm and complete worm wheel. A worm and nut mechanism is also used to quite an extent, particularly abroad, while spur pinion and rack, and bevel pinion and bevel gear sector mechanisms are used in a few cases.

In pleasure cars the steering motion is geared down in such a ratio that it requires from one to one and a quarter complete turns of the steering hand wheel to turn the front wheels from hard over one way to hard over the other way and in trucks, so it requires from one and one-half to two complete turns. The linkage connecting the steering mechanism with one of the knuckles is generally so proportioned that the steering arm which is secured to the steering device turns through an angle of about 60 degrees while the road wheels are turned

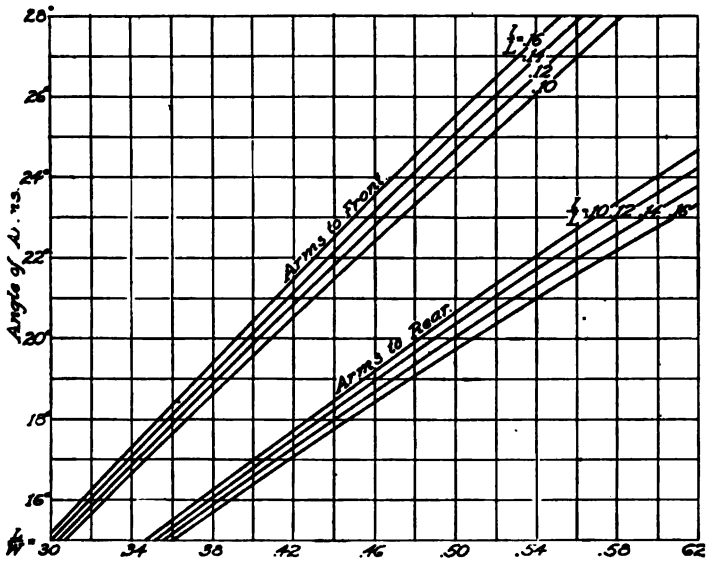

CHART V.—PROPER KNUCKLE ARM ANGLES FOR A LIMITING DEFLECTION β OF FORTY DEGREES.

through their entire range. This implies a reduction ratio of the steering mechanism of from 6:1 to 12:1, according to the weight and speed of the vehicle.

Reversible and Non-Reversible Gears—For powerful, high speed cars it is generally considered best to have the steering gear back-locking or irreversible; that is to say, so designed that any shocks received by the road wheels will not be transmitted to the steering hand wheel. This undoubtedly makes for comfortable driving under all circumstances, and for safety in driving at high speed. On the other

hand, for moderately powered cars a slightly reversible steering gear has an advantage, because it greatly reduces the shocks on the steering mechanism, as well as on the front axle. It is obvious that with an absolutely irreversible mechanism any shocks received by the front wheels are entirely taken up by the steering mechanism, whereas with a slightly reversible mechanism the shocks are partly transmitted to the steering wheel, and the strain on the steering members is relieved by the cushioning effect due to yielding of the driver's arm. There is no fixed angle of lead of the worm below which the worm gear is non-reversible, as the point where it becomes reversible depends upon the materials, the finish and the state of lubrication of the mechanism. Assuming a coefficient of friction of 0.1 the worm gear efficiency formula given in a previous chapter shows that a worm gear becomes back-locking when the angle of lead drops below 6 degrees, but this formula takes no account of the bearing friction. Generally, when it is desired to make the steering mechanism irreversible the angle of lead is made from 8 to 10 degrees, whereas for a slightly reversible gear a lead angle of 12 to 16 degrees is chosen.

Calculation of Worm and Wheel—Steering mechanisms of the worm and sector or worm and wheel types are calculated by means of the formulæ for worm gearing given in an earlier chapter. Since the steering arm usually swings only through an angle of 60 degrees, only about 90 degrees of the worm wheel comes in contact with the worm teeth, while the front wheels are moved through their entire turning range. Formerly it was customary to use a sector embracing only about 90 degrees of the complete wheel, and this practice still prevails abroad, but in recent years it has become the custom in this country to employ a complete wheel, the shaft of the wheel being squared where the steering arm is secured to it, so that after one section of the wheel shows appreciable wear, the wheel can be turned through an angle of 90 degrees and another quarter section brought into action. The wearing portion of the worm wheel can thus be renewed three times in succession.

Both the worm and the wheel of a steering mechanism are made of steel. The conditions differ from those under which a worm gear transmission operates in that mechanical strength of the teeth is the chief consideration rather than

minimum friction, for which reason steel is used for the wheel instead of bronze. The worm is usually case hardened.

As regards its ability to sustain tangential loads, the worm wheel of a steering mechanism does not differ much from a spur gear, and the necessary size of the wheel may be determined by a method similar to that used for the calculation of spur gears. In the chapter on the change speed gear we found that the maximum safe tangential load of a spur gear is given by the equation

$$w = S\, p\, f\, y,$$

where S is the maximum permissible unit stress; p the circular pitch; f the face width and y a constant. The constant y may be neglected in this case because the number of teeth used in the wheels of worm steering mechanisms does not vary much. Roughly speaking, the face width f is proportional to the pitch diameter of the worm, which in turn is proportional to the distance between the axes of worm and wheel. Also, the tangential force on the worm wheel acts through an arm equal to the radius of the wheel, which is also proportional to the distance D between the axes of worm and wheel. Hence, the moment which the worm wheel will sustain,

$$M_r \sim D^2\, p.$$

On the other hand, the maximum turning moment which will be impressed upon the worm wheel,

$$M_1 \sim W \frac{a\, c}{b}$$

Where W is the maximum weight on one front wheel; a, the distance between the centre plane of the wheel and the steering pivot; b, the length of the knuckle arm and c, the length of the steering arm. Hence we may write

$$W \frac{a\, c}{b} \sim D^2\, p$$

Data on hand shows that in modern pleasure car practice

$$D = \sqrt{\frac{W}{600} \times \frac{a\, c}{b\, p}} \qquad \ldots\ldots(72)$$

and in motor trucks fitted with solid tires

$$D = \sqrt{\frac{W}{1{,}200} \times \frac{a\, c}{b\, p}} \qquad \ldots\ldots(73)$$

Six pitch teeth are usually employed in pleasure car steering gears, and four pitch teeth in gears for heavy trucks. The worm is made with from two to four threads. Equations (72) and (73)

are useful as an indication of the capacity of different gears. They are intended to be used only in connection with mechanisms comprising a full wheel; when a sector is used the centre distance for a certain capacity should be made somewhat greater, as with no means for compensating for wear of the teeth it is advisable to reduce the wear by keeping down the unit tooth pressure.

We will now illustrate the design of a worm and wheel steering mechanism by the example of a gear for a medium sized touring car with a maximum weight of 750 pounds on one front wheel and a distance of 2¾ inches between the centre plane of the wheel and the pivot axis. We may assume that the steering arm and knuckle arm are of equal length. If the pitch of the teeth is to be 6, then the required centre distance of worm and wheel is

$$\sqrt{\frac{750}{600} \times \frac{2.75}{0.52}} = 2.57 \text{ inches.}$$

Now suppose that the worm has three threads and an angle of lead of 14 degrees, so as to be slightly reversible. Then the worm pitch diameter will be

$$\frac{3 \times 0.5236}{3.1416 \times 0.242} = 2.067 \text{ inches.}$$

A wheel with 21 teeth would give a reduction of 7 to 1 and would require a little over one complete turn of the steering wheel to turn the steering arm 60 degrees. Such a wheel would have a pitch diameter of

$$\frac{21 \times 0.5236}{3.1416 \times 0.9703} = 3.605 \text{ inches.}$$

The centre distance then would be

$$\frac{2.067 + 3.605}{2} = 2.836 \text{ inches.}$$

This is a little more than the centre distance required according to equation (72). If the centre distance had come out a little too small we could have chosen one or two more teeth for the wheel and made the calculation over.

The included angle of the wheel face is usually made between 45 and 60 degrees.

It is somewhat difficult to arrive at a basis for dimensioning the steering gear, since the forces which the different parts are called upon to transmit are indeterminate. These forces, of course, increase directly with the weight on each front wheel, and substantially as the distance between the centre plane of the wheel and the steering pivot axis. The forces

also increase with the maximum speed of the car, but rather than to introduce the speed into formulæ for the dimensions of the gear it will be advisable to use different constants in such formulæ for gears intended for different classes of vehicles. The author has found that in average pleasure car practice the torsional strength of the worm wheel shaft at the elastic limit of the material is about seven times greater than the product of the weight on each front wheel into the distance between the centre plane of the wheel and the steering pivot axis, and in truck practice three and one-half times greater. These coefficients will serve as a basis for portioning the worm wheel shaft, the steering arm and the drag link. The proper size of the worm wheel shaft can be determined first, and the other parts enumerated can be made of such size that they are strained to their elastic limit when the shaft is strained to this point.

The usual formula for the torsional strength of a round shaft is

$$T = 0.196\ d^3\ S.$$

If the shaft is square at one end for fitting the steering arm its strength is reduced to about

$$T = 0.14\ d^3\ S.$$

If now we make S equal to the elastic limit of the material then for pleasure cars,

$$7\ W a = 0.14\ d^3\ S$$

and

$$d = \sqrt[3]{\frac{50\ W a}{S}} \qquad (72)$$

while for motor trucks

$$d = \sqrt[3]{\frac{25\ W a}{S}} \qquad (73)$$

These formulæ are to be used only for the conventional construction, as they would fail if the steering pivot were in the centre of the wheel.

The worm wheel shaft is preferably forged integral with the wheel, owing to the fact that space in the direction of the axis of the worm wheel is limited, at least if the shaft is mounted in plain bearings, as is usually the case, and it is therefore difficult to secure the worm wheel or sector rigidly by keying or otherwise.

Bearings.—Each of the two parts of a worm and wheel steering gear is subjected to both thrust and radial loads, the thrust load on the worm being particularly great. Ball thrust bearings are nearly always provided on the worm shaft, whereas the radial load on this shaft is generally taken on plain bearings, though in some instances cup and cone bearings are used to take both the radial and thrust load. This applies to both the worm and the wheel. The cup and cone bearing would seem to have special advantages in this case, and it is somewhat surprising that it is not more extensively used. In the majority of cases the wheel shaft is mounted in plain bearings and has plain thrust washers of bronze or hardened steel. In gears for the cheaper grade of cars the shaft of the worm wheel or sector is generally supported in one bearing only, but this is not as satisfactory as bearings on opposite sides of the wheel. The total bearing length of the worm wheel shaft is made from three diameters in the case of a single bearing to as high as six diameters in the case of two bearings. From four and one-half to five diameters is good average practice. It is very essential that proper provisions be made for the lubrication of the shaft bearings, as excessive wear due to want of lubrication is common and very annoying.

In order to provide means for adjusting the mesh of the worm and the wheel, eccentric bearing bushings are sometimes placed on the wheel shaft, which can be turned in the hubs of the housing and secured in any position. Such an adjustment permits of compensating for errors in machining the housing, but not for wear of the worm and wheel.

Steering Shaft.—The steering shaft to which the worm is secured presents quite an engineering problem. The size of the worm limits the external diameter of this hollow shaft, and its internal diameter is limited by the fact that it must contain three concentric members, viz., a stationary tube which supports the sector on which the spark and throttle levers move, the throttle control tube and the spark control shaft, together with bearing bushings for the latter two. Yet, the steering shaft must have an appreciable wall thickness because the worm and the steering hand wheel have to be keyed or otherwise rigidly secured to it.

The worm calculated in the foregoing example, which had a pitch diameter of about 2$\frac{1}{8}$ inches and a bottom diameter of about 1$\frac{3}{4}$, is about as small a worm as it used in steering

gears. The largest diameter of steering shaft that this will take is about 1⅛ inches outside diameter. If the control shafts are to be placed concentric with the steering shaft the largest possible wall diameter of the latter is one-eighth inch. The different concentric members could then be made of the following dimensions: Spark shaft, five-sixteenth inch diameter; throttle control shaft, one-half inch o. d. and three-eighth inch i. d.; stationary tube, three-quarters inch o. d., five-eighths inch i. d.

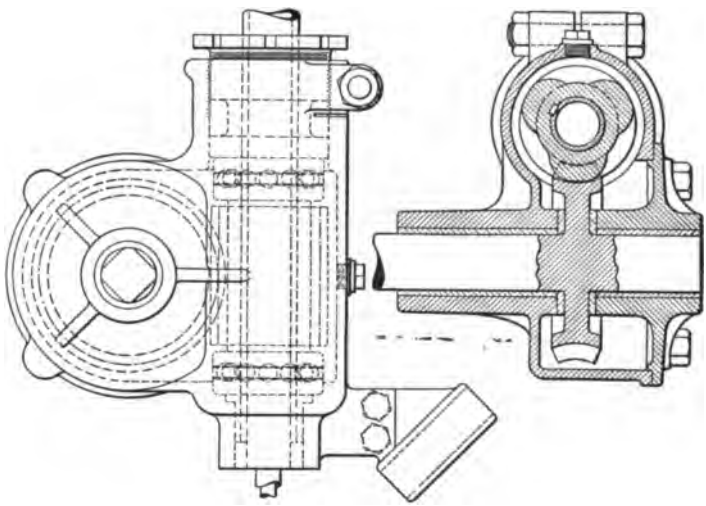

FIG. 277.—WORM AND WHEEL STEERING MECHANISM WITH ONE PART CASING.

In steering gears of large size, where the worm diameter does not limit the outside diameter of the hollow shaft so closely, a tube with a three-sixteenth inch or even thicker wall is used, which permits of securely keying the worm and hand wheel to it, and the middle portion of the tube is turned down in the lathe for weight economy.

For fastening the worm to its shaft the best plan would seem to be to broach it out and mill, say, four grooves into the outside of the steering shaft, but the most common plan seems to be to use a single key.

Steering Gear Cases—There are three general types of steering gear cases. These cases may be cast in a single piece, with a separate end plate, as shown in Fig. 277; they may be split in the plane through the worm axis and perpendicular to the wheel axis, as in Fig. 278, or in the plane of the wheel axis and perpendicular to the worm axis, as in Fig. 279. The tendency in American practice, especially in the low priced class, seems to favor the first construction. The worm can be introduced either from the top or bottom, and the wheel, of course, is introduced from the side. One of the thrust bearings rests against the wall of the case and

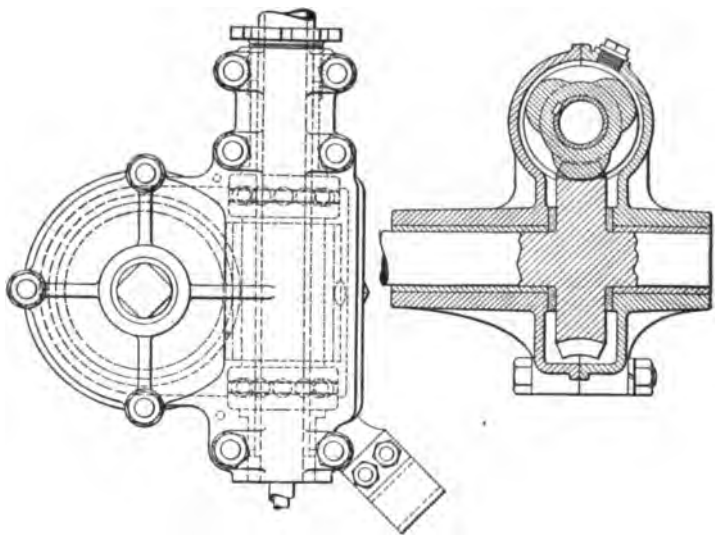

FIG. 278.—WORM AND WHEEL STEERING MECHANISM WITH VERTICALLY DIVIDED CASING.

the other against a threaded bushing screwing into the casing. This bushing is made slightly larger in diameter than the worm, and is locked in position by a clamp screw which contracts the neck of the case. The casing, as well as the removable end plate, is cast with a bearing hub, which is properly strengthened by ribs. The thrust on the worm wheel shaft is taken up on thrust washers.

These cases are generally made of malleable iron, with a wall thickness of three-sixteenth inch. The gears and bear-

ings are lubricated by means of grease contained in the case, and a plugged hole is provided in the case for replenishing the grease supply therein at intervals. However, the bearings should preferably be provided with separate grease cups, particularly the top one.

Housings split in one of the centre planes are somewhat neater in appearance, but involve more machine work. The halves must be doweled, and, of course, several more bolts are required for the joint than where only an end plate has to be secured. This construction also facilitates assembling,

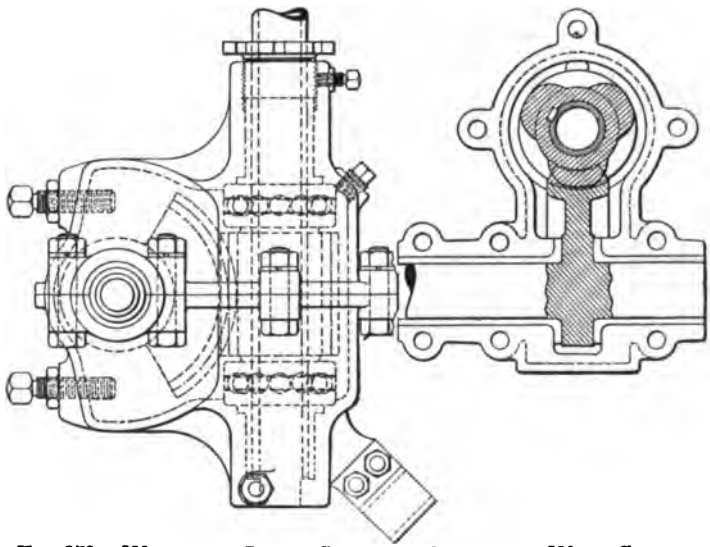

FIG. 279.—WORM AND SECTOR STEERING MECHANISM WITH CASING DIVIDED THROUGH THE SECTOR AXIS.

as the steering post can be completely assembled before the housing is put in place, and, besides, the latter can be made somewhat more compact, as it is not necessary to introduce the worm and thrust bearings from the end.

Fig. 279, which shows the housing divided in a plane perpendicular to the worm shaft, also illustrates the use of a sector instead of a complete wheel. Where a sector is used it is customary to provide set screw stops, limiting the motion of the sector, which makes steering stops on the front axle unnecessary.

Screw and Nut Type Steering Gears—The screw and nut steering gear consists of a multiple square threaded screw and a corresponding nut, with trunnions on its outside, carrying square trunnion blocks located in slots in the arms of a forked lever, which is keyed or otherwise secured to the steering arm shaft, or made integral therewith. The size of the screw depends somewhat on whether the control shafts are to be concentric with the steering post or outside of it.

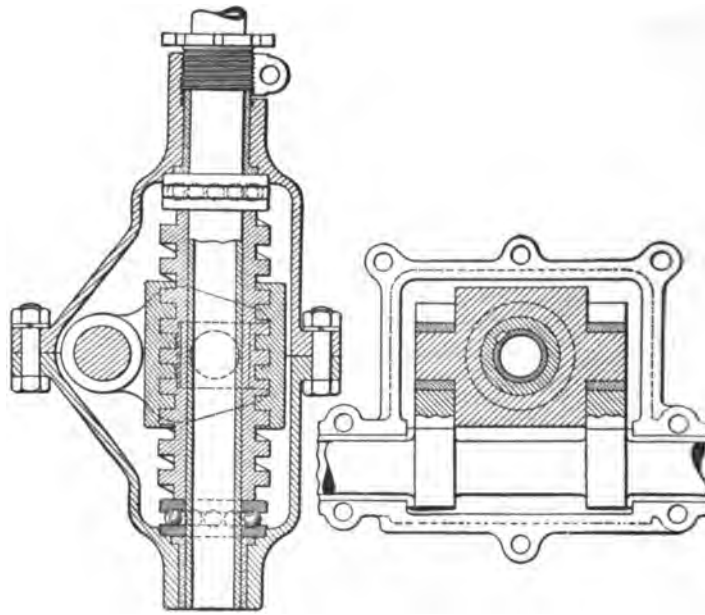

FIG. 280.—SCREW AND NUT TYPE STEERING GEAR.

Let us call the distance between the screw and steering arm shaft axes a. Then if the steering arm is to swing through a maximum range of 60 degrees, or 30 degrees to either side of its central position, the motion b of the nut along the screw from the central to one of its limiting positions must be such that

$$\frac{b}{a} = tan\ 30^\circ = 0.577$$

Thus, if $a = 3$ inches, then

$$b = 3 \times 0.577 = 1{,}731\ \textit{inches}$$

and the total motion of the nut along the screw is twice this. or 3.462 inches. If the screw be given a lead of 2½ inches then the steering hand wheel will have to be turned through

$$\frac{3.462}{2.5} = 1.385 \textit{ turns}$$

in order to turn the front wheels through their entire range. Now, suppose the screw has an outer diameter of 2 inches. Then the angle of the thread at the circumference will be such that

$$\tan \Theta = \frac{2.5}{2 \times 3.1416} = 0.398$$

$$\Theta = 21^\circ\ 42'.$$

With a lead of 2.5 inches and quadruple thread the thickness of the tooth will be

$$\frac{2.5}{8} \cos 21^\circ 42'$$

$$\frac{2.5}{8} \times 0.929 = 0.29 \textit{ inch}.$$

The depth of the thread is usually made equal to the width.

Double Screw Adjustable Gears—It has been attempted to overcome the difficulty encountered in cutting the thread in the nut by casting a babbitt thread in a steel sleeve provided with holes to insure a good hold for the babbitt. Some of the gears based on this principle have proven failures, probably because the thread contract surfaces were too scanty. Of course, even a slight amount of wear in the steering mechanism is objectionable, because it entails a very considerable play in the hand wheel. Various schemes have been tried for taking up wear in steering mechanisms, but most of them are either too expensive for commercial work or else are objectionable for other reasons. A very neat mechanical solution of the adjustment problem is embodied in the double screw type of the Gemmer Mfg. Co., illustrated in Fig. 281. Secured to the steering shaft *D* is a steel shell *C*, which is provided with a left hand square screw thread on its outer surface and a right hand thread on its inner surface, the pitch of both threads being the same. When shaft *D* is turned right handedly, sliding member *B* is moved down and sliding member *E* up. These two sliding parts press against opposite ends of a double armed lever *F* secured to the steering arm shaft and cause the latter to turn in its bearings, the power being transmitted through sliding member *B* when shaft *D* is turned right handedly, and

through sliding member *E* when shaft *D* is turned left handedly. Any wear on the threads can be taken up by screwing the bushing *A* further into the housing.

Another combination often used in steering gears is a screw and nut, together with a rack and spur wheel sector, the rack teeth being cut on the outside of the nut.

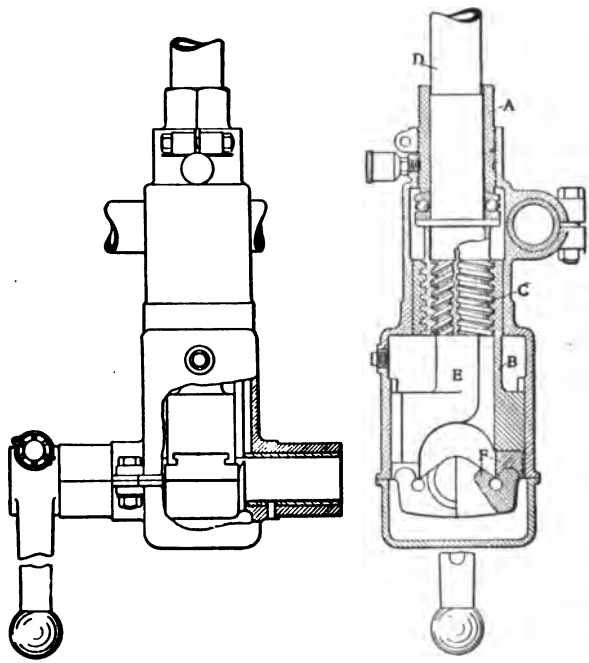

FIG. 281.—DOUBLE SCREW TYPE STEERING GEAR.

Bevel Gear Steering Mechanism—Other mechanisms for reducing the steering motion include a bevel pinion and sector, a spur pinion and sector, a spur pinion and rack and a planetary set. All of these gears are completely reversible, and with a car fitted with any of them it is impossible for the driver to take his hands off the wheel while in motion, and he feels the road shocks more than with the type of gear previously described. These steering mechanisms, therefore, are suited only to cars of moderate speed capabilities or those having such an arrangement of the steering pivots that practically no motion can be transmitted from the wheel to the steering mechanism.

Owing to the reversibility of these gears the gear reduction should be made as large as space limitations permit.

Fig. 282 illustrates the Reo steering gear which is of this type. The thrust of the bevel gear sector is taken up on a steel roller, and the steering motion is limited in a very simple manner by leaving a portion at each end of the sector without teeth. Bevel gear type of steering mechanisms have less need for housings than the worm and wheel type, but some designers enclose them also.

Support of Steering Gear.—If the knuckle arm to which the drag link connects is below the front axle the steering

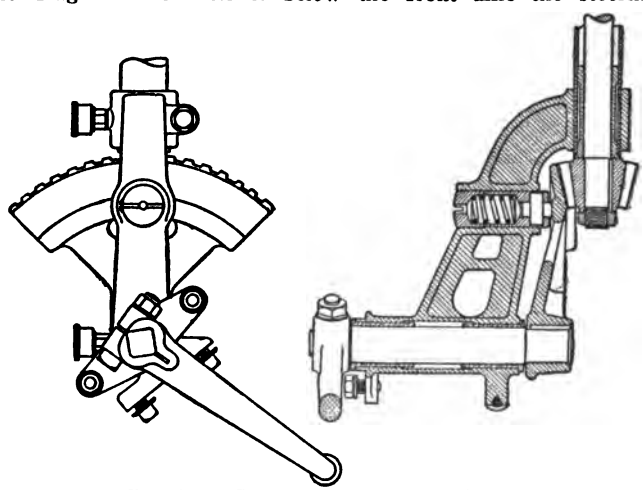

FIG. 282.—REO BEVEL STEERING GEAR.

arm can be placed inside the frame member—a construction found on a considerable number of European cars. Where the knuckle arm is above the axle this arrangement is impossible, because the front spring would interfere with the drag rod.

In this connection it is to be remembered that with the drag link outside the frame it limits the possible steering motion toward the side on which the steering gear is located, as the front wheel will rub against the drag link before touching any other part. This disadvantage may be overcome by placing the drag link crosswise of the frame. In motor trucks having the motor located underneath the driver's seat the steering mechanism

naturally comes in the right position for a transverse drag link, and in touring cars it can be brought into the proper position by giving the steering post a large inclination. In any case, the aim in laying out the steering connection should be to minimize the effect of front spring action on the steering gear. With a transverse drag link the link should be substantially horizontal when the car carries a normal load, whereas with a fore-and-aft drag link, with the car under normal load, the axis of the drag link produced should pass through the centre of the front spring eye—supposing the front spring to be pivoted to the frame in front and shackled at the rear.

In touring cars the steering gear housing usually comes in a rather cramped position between the engine and the frame. It may be so placed that the worm wheel shaft passes either through the web of the frame channel, above the channel or below the channel. In most cases the shaft passes right through the frame member. The housing is generally bolted to the frame side member, being provided with a bracket which fits into the opening of the channel. Again, the housing may be bolted to the top of the side member, to an engine arm or to a cross member of the frame. A rigid support is necessary; and, besides, it is well to remember that holes through the flanges of a frame channel greatly reduce its strength, whereas holes through the centre of the web have practically no weakening effect.

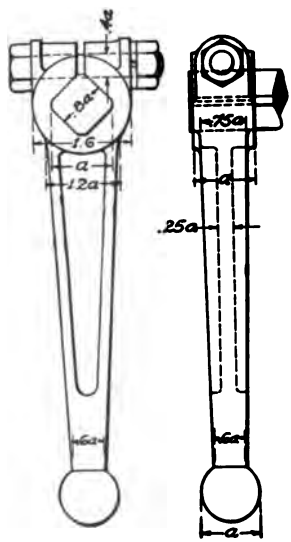

FIG. 283.—STEERING ARM.

Steering Arm—The steering arm in a touring car is generally from 7 to 9 inches long. The knuckle arm in most designs is made as long as the location of the front springs permits, and the steering arm the same length or slightly longer. In a worm and complete wheel type of steering gear the steering arm is always fitted to the squared end of the wheel shaft, so as to permit of turning the wheel through a quarter circle. The hub of the arm is split and clamped on the shaft, the

clamping bolt passing slightly beneath the surface of the shaft.

When a worm wheel sector is used and the housing is divided in the plane through the sector shaft the steering arm and shaft may be forged integral, with a flange sector on the shaft to which the worm wheel sector is bolted. Occasionally, the steering arm is bent so that, although its hub is located inside the frame, its connection to the drag link comes outside the frame, so as to avoid interference with the spring. A typical design of steering arm, with the usual proportions, is illustrated in Fig. 283. It will be found that if this arm is made of the same material as the wheel shaft it is of substantially the same strength as the squared portion of the shaft. When a worm wheel sector is employed instead of a complete wheel the steering arm usually is secured to its shaft with a tapered joint—a Woodruff key and castellated nut being used.

Drag Link and Connectors—The drag link, which in touring cars usually extends directly fore-and-aft and in motor trucks and cars of the raceabout type crosswise of the frame, is usually made of the same cross section as the tie rod. This practice is logical, at least if the tie rod is located back of the axle and the drag link is of about the same length. However, if the highest weight economy is desired the proper size of this tube can be calculated by means of Rankine's formula for columns, proportioning it so that its material will be strained to the elastic limit when the rod is subjected to a thrust equal to the quotient of the torsional strength of the steering arm shaft by the length of the steering arm. In the better grades of cars, particularly those provided with non-reversible steering gears, it is customary to introduce cushion springs in the drag link joint so as to relieve the shock. A length of tube of enlarged diameter is screwed over the end of the tube forming the main part of the drag link, or is pinned to it. As shown in Fig. 284, inserted into this connector housing are the following parts in the order named: A coiled spring, a spring block with a spherical depression, the ball end of the steering arm, another spring block, another coiled spring and a screw plug secured by a cotter pin. In this design the ball is passed through a hole far enough to the end of the connector housing so that the ball can never get opposite it after all the parts are in place. Sometimes the slot in the housing through which the steering arm passes extends entirely to the end of the housing, in which case a screw cap is used instead of

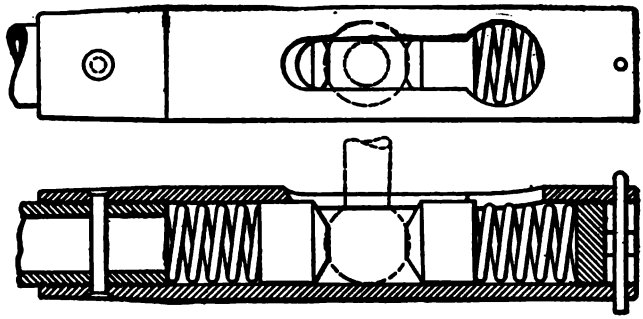

FIG. 284.—BALL AND SOCKET SPRING CUSHIONED CONNECTOR.

a plug to close the end of the housing. The spring cushioned joint is generally placed at the steering gear end of the drag link, the joint at the opposite end being made similar, but without the springs. Both joints are generally enclosed in a laced leather boot which is filled with grease.

Fig. 285 illustrates a front end connector of English design. It is of the ball and socket type, but entirely different in principle from the connector shown in Fig. 284. The ball is held between two steel blocks, which are inserted into a fitting of the general form of a chain link. The blocks are held between one end of this link and the end of the connector rod, which latter

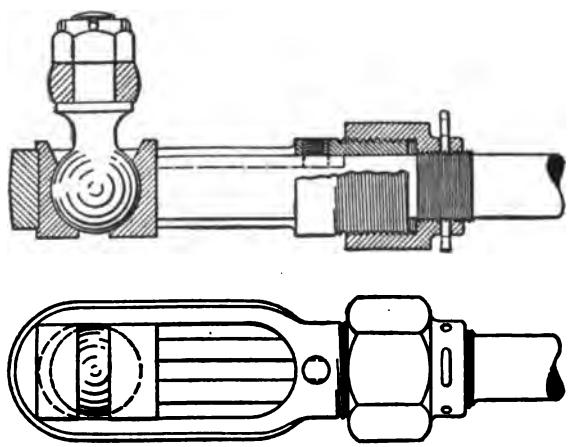

FIG. 285.—DRAG LINK FORWARD CONNECTOR.

passes through a hole through the hub at the opposite end of the link. The chain link and connector rod are secured together by means of a gland nut with differential threads, the thread on the hub of the link being much coarser than that on the rod. Thus, when the nut is screwed over the threads on the rod and the hub, although both are right-handed threads, the link will be moved relatively to the rod, and thus the socket blocks will be forced against the ball. When they have been properly adjusted the nut is locked by means of a split pin.

Universal joints are necessary at both ends of the drag link, because the steering arm moves in a vertical plane and the knuckle arm in a horizontal plane, but instead of ball

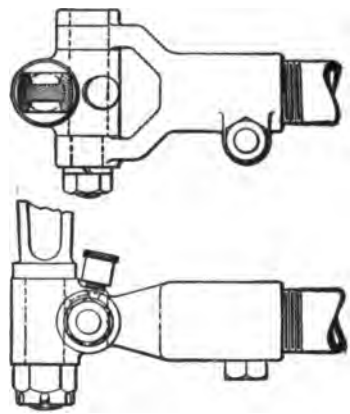

FIG. 286.—FORKED CONNECTOR.

and socket joints, forked joints are sometimes used. These are somewhat simpler in construction, and larger bearing surfaces can be obtained than with ball and socket joints. but they are not so easily enclosed in a grease filled, laced leather boot, and are generally lubricated by means of a special grease cup. The grease cup may be screwed into the cross piece, as shown in Fig. 286, or into the end of the horizontal pin.

Steering Wheel—Steering hand wheels are made 14 inches in diameter for very small cars, 16 inches for medium sized cars, 18 inches for large touring cars, and as high as 20 inches for heavy trucks. The rims are made of either hardwood or hard rubber. The section is generally oval, 1x1⅜ inch and 1⅛x1½ inches being common sizes. The spider is made of brass

or aluminum, with either three or four spokes—generally four. In commercial vehicle practice malleable iron spiders are used. The spokes of brass and malleable iron spiders are mostly made of oval section, but the spokes of aluminum spiders are made of channel section or of T-section with large fillets to facilitate buffing. For a 16 inch wheel with brass spider the spokes are made about 1¼x⅜ inch near the hub and tapering down to ⅞x⅝ inch near the rim. In an aluminum spider for the same diameter wheel, the spokes, if of channel or T-section, are made about ⅞ inch deep near the hub and ¼ inch near the rim.

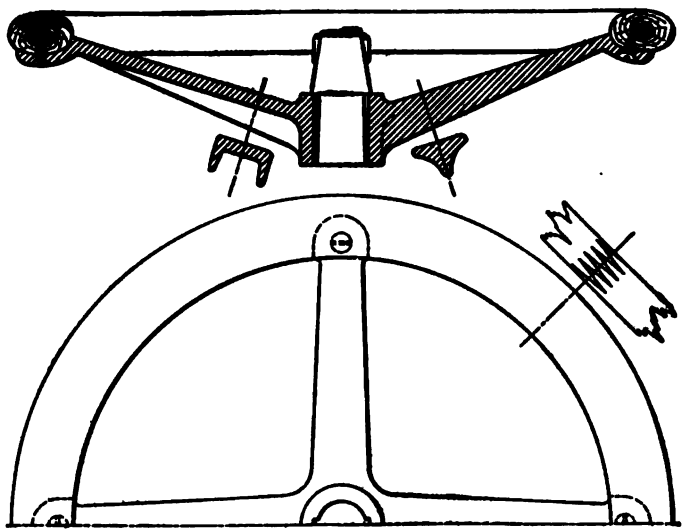

FIG. 287.—STEERING WHEEL WITH ALUMINUM SPIDER AND BENT WOOD RIM.

There are two general designs of wood rims. The most commonly used type, illustrated in Fig. 287, is secured to the arms of the spider by means of wood screws. The other form, used more particularly abroad and in the higher grade cars in this country, has a ring cast integral with the spider, which is let into a groove turned in a part of the wooden rim (see Fig. 288). The rims are made in different ways. In one construction, illustrated in Fig. 287, the whole rim is made of a single piece of wood. First a solid piece of wood of square section

and the requisite length is sawed out, and its ends are cut with wedge-shaped teeth about ¼ inch wide and 1 to 1¼ inches deep. It is then turned down to a circular or oval section, steamed and bent to a circle of the right size to bring the pointed tenons together, when they are glued and firmly pressed together in a special clamp in which the rim is left until dry. Specially flexible woods are used for this construction, as most woods do not allow of bending to such a small radius. Instead of making the entire rim in one piece, it may be made in halves, with joints of the type above described. A quarter inch dowel pin through the

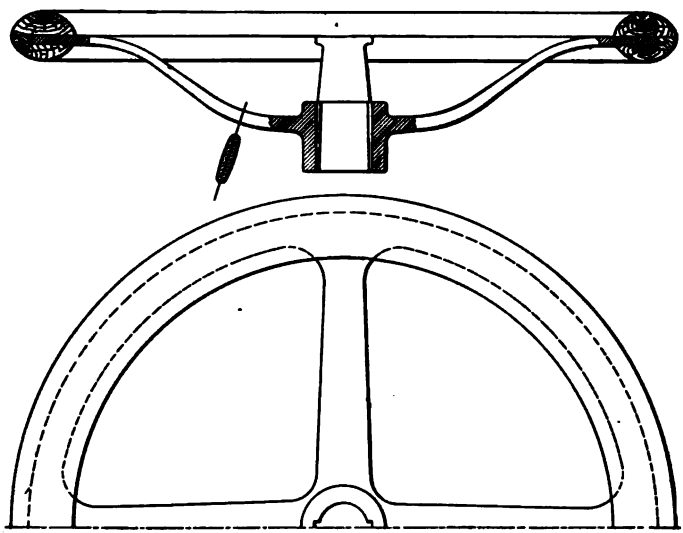

FIG. 288.—STEERING WHEEL WITH LAMINATED WOOD RIM AND OVAL ARM SPIDER WITH INTEGRAL RIM.

centre of the joint makes it more secure. Fig. 287 shows two methods of securing the rim to the spokes of the spider.

Another method of making the rims consists in building them up of segments. For the more expensive cars, rims of mahogany, walnut or ebony are extensively used. As a rule, three layers of segments of four or six to the circle are used, six being preferable, as there is not so much end grain where the segments are joined together. After the segments are sawed out they are glued up three deep into rings, and are then turned up in a

lathe. They are secured in the lathe either by being glued to a wooden face plate with a sheet of newspaper between, or else by means of a number of screws. Of course, if the spider is cast with an integral ring, the final turning up of the rim has to be done with the spider in place.

Vulcanized rubber steering wheel rims are coming into extensive use. The rubber is vulcanized onto a ring cast integral with the spider, and is provided on the inside with depressions to fit the fingers, and on the outside with small

FIG. 289.—HARD RUBBER RIM WHEEL.

evenly spaced projections, so as to enable the driver to obtain a firm grip of the wheel. A typical hard rubber steering wheel is illustrated in Fig. 289.

In pleasure cars the steering shaft is generally enclosed in a brass tube of $\frac{1}{8}$ inch wall thickness. Referring to Fig. 290, this tube is set into a recess formed in the adjusting nut at the top of the steering gear and usually forms a tight fit in a bracket secured to the dashboard or to the toolboard. At the top it receives a bushing for the steering shaft, or it may extend into a

recess turned in the hub of the steering wheel, in which case the hub holds the casing concentric with the shaft and no bushing is required. In some designs the steering shaft case extends down to the dash bracket only, and in commercial vehicles it may be entirely omitted.

There is a great deal of variation in the inclination of the steering column, depending upon the relative location of the

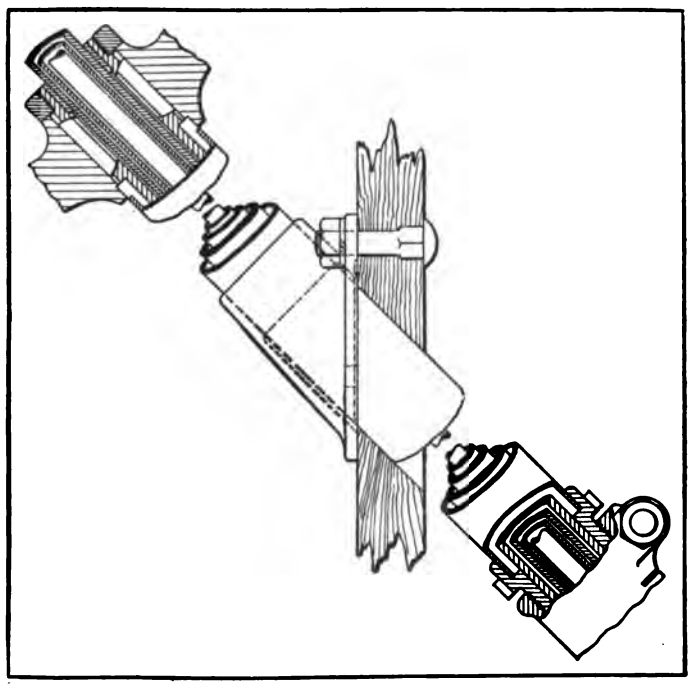

FIG. 290.—STEERING COLUMN.

steering mechanism and the driver's seat. In standard touring car practice it is usually inclined about 45 degrees, and in the more rakish types of cars, such as raceabouts, about 60 degrees. In order that the driver may be able to easily enter his seat the steering wheel rim should not come closer than 8 inches to the front edge of the seat cushion.

Adjustable Steering Column—Owing to the fact that drivers vary a great deal in stature, some manufacturers con-

sider it expedient to make the rake of the steering column adjustable. This practice is particularly prevalent in England, where bodies are built to purchasers' specifications, and it is possible that this is another reason for providing adjusting means, as the relation of the seat to the column determines the comfort of the driver to a large degree. To make the steering column adjustable, the bearing hubs of the steering gear case are mounted in trunnion supports on the frame and the column passes through a slot in the dashboard or toeboard, clamping means being provided to secure it in different positions.

CHAPTER XVI.

CONTROL.

Spark and Throttle Control—The conventional location of the spark and throttle control levers is on top of the steering column. A sector of hardened steel is secured by screws to a double armed brass bracket which is fixed to a stationary tube concentric with the steering post. Usually the bracket is clamped to the tube, though some makers fasten it by means of a screw. The spark lever is usually secured to the central rod by pinning, and the throttle lever to the tube surrounding this rod by clamping.

The angular extent of the sector may be anything from about 75 degrees to a complete circle. The former size of sector is used if the connections from the lower ends of the spark and throttle shafts are to be made direct by levers and links. This is the simplest construction, but it is obvious that a much finer control is possible if the range of the finger levers is greater, and for this reason a reducing gear of some kind is usually introduced in the control mechanism at the bottom of the steering column. In American touring car practice it is customary to use a sector of 180 degrees or slightly less, whereas in European practice 90 degree sectors are very common. The 180 degree sectors are so placed that the ends of the sector lie in the fore and aft direction, the sector extending to the right from the steering post. Forward motion of the levers advances the spark and opens the throttle.

Some means must be provided for automatically holding the control levers in any position in which they are placed. The most common arrangement consists in providing the steel sector with ratchet teeth on both edges, and the finger levers with a spring pressed pawl which engages with the teeth on the sector. The ratchet teeth are cut with an angle of about 90 degrees, so that if a tangential force is applied to the lever arm the pawl will slide freely over the notched sector. A typical design of control levers is shown in Fig. 291.

In another design of control levers an arm of spring metal is riveted to a brass hub and provided with a hard wood or hard rubber knob on the outer end. In this case the flat side of the steel is placed vertically, and the under and upper edges are notched, wedges secured to the levers by means of rivets engaging with these notches. Probably a somewhat neater design would be obtained by saw slotting the lugs on the lever centres, placing the spring steel arms in the saw slot, and countersinking

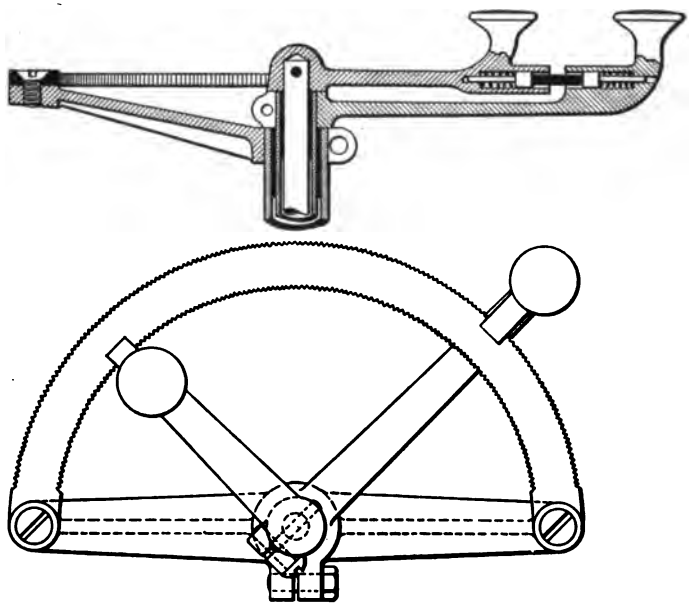

FIG. 291.—RATCHET CONTROL.

the holes for the rivet heads. In the design shown in Fig. 292 the throttle lever must be pressed down and the ignition lever raised up in order to move them easily. By using two sectors it is possible to arrange the levers so that both of them can be released by pressing on them, which method of operation may be considered preferable, for the reason that the weight of the hand naturally rests on the levers. The ratchet teeth should not be over $\frac{1}{8}$ inch deep, so the lever can be moved with as little noise as possible.

Fig. 293 illustrates a design of friction levers. On top of the stationary tube in the steering column is mounted a cylindrical brass box. with a horizontal slot on one side through which the control levers extend. An extension of each lever arm to the opposite side of its axis carries a friction segment which is pressed against the inner wall of the cylindrical housing by a coiled spring. The pressure of this spring can be adjusted by means of a nut and lock nut.

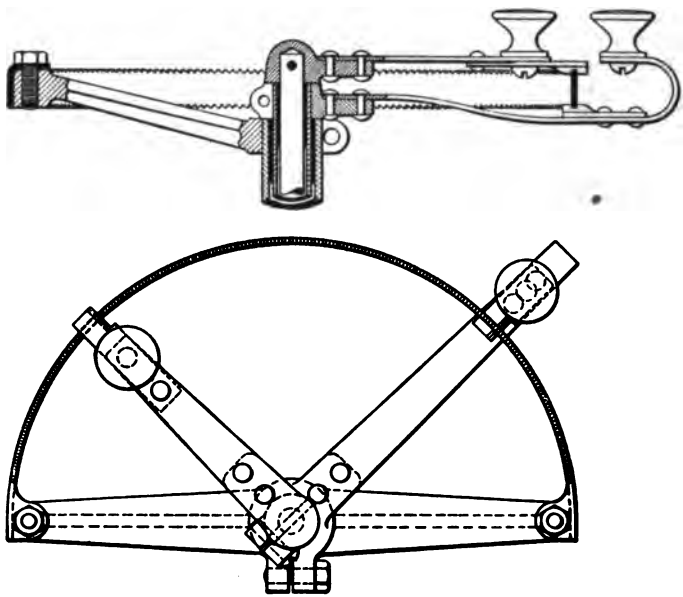

FIG. 292.—SPRING LEVER CONTROL.

Ball Wedge Locking Device.—Fig. 294 illustrates a mechanism widely used on European cars for securely holding control levers in any position in which they may be set. The mechanism consists of a stationary housing *A*, which is usually part of the bracket by which it is supported. *E* is the control lever and *B* the operated lever. Formed integral with lever *E* are two lugs *F F*, extending between the wall of the housing *A* and a cam *C* on the shaft of lever *B*. In the recess between the two lugs *F F* are located two steel balls with a coiled spring between them. The cam surface and the inner wall surface of the housing are eccentric, and are so spaced relative to each other that the steel

balls do not quite contact with the lugs *F F* when no pressure is being exerted on the lever *E*. The wedging effect of the balls between the two non-concentric surfaces securely locks the lever *B* in place. It will, moreover, be seen that lever *B* is locked against motion in either direction, each ball locking it against motion in one direction. If lever *E* is turned in a particular direction, one of the lugs *F F* presses against the ball near it, slightly compressing the spring, and the other lug then abuts against the arm of lever *B*, so that any further motion of lever *E* entails a corresponding motion of lever *B*. One of the precautions to be observed in the design of the device is to see that

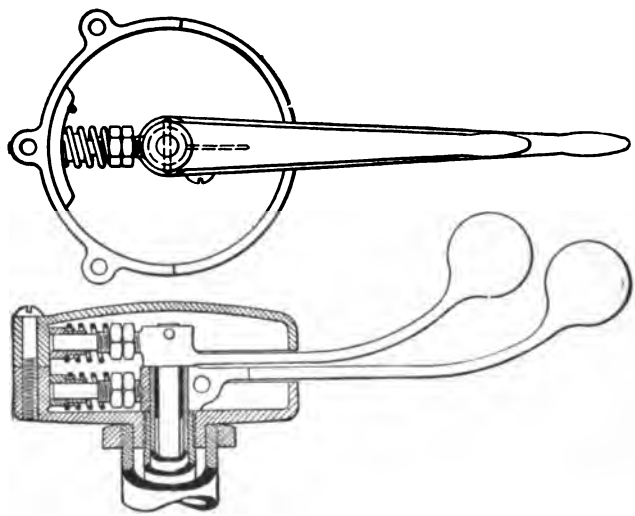

FIG. 293.—FRICTION CONTROL.

the clearance between the balls and the lugs *F F*, when lever *E* is not under pressure, is slightly less than the clearance between these lugs and the arm of lever *B*. The inner wall of the housing and the cam surface are grooved to fit the contour of the balls, so as to distribute the pressure over a larger surface and prevent injury to the balls. The condition necessary that the lever may be locked securely is that when the ball is in the locking position the tangents at its two points of contact make with each other an angle which is less than twice the angle of friction.

When applied to a control gear on top of the steering column, lever *B* in Fig. 294 is replaced by a small lug on cam *C*, with

which the lugs *F F* may engage, and cam *C* is fastened to the central shaft by which the motion is transmitted. This locking device is used even for such important parts as the emergency brake lever, but where the effort to be transmitted is considerable two or three pairs of balls are used and a cam with three cam surfaces.

Owing to the fact that the control levers have a motion of about 150 degrees, whereas a lever arm transmitting motion through a link does not work advantageously beyond a range of about 90 degrees, the motion of the control shafts has to be reduced in some way, and this is now generally accomplished by means of a pair of small bevel gears or bevel gear sectors at the bottom of the steering column. As shown in Fig. 295,

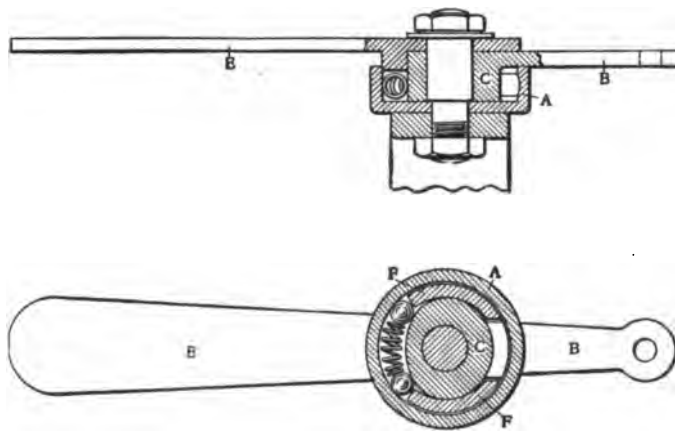

FIG. 294.—BALL WEDGE CONTROL LOCK.

the bevel gears or sectors are secured to the lower ends of concentric vertical shafts carried in a bearing which is generally clamped to a bracket cast integral with the steering gear housing. Sometimes the bearing bracket is formed integral with the bottom plate of the steering gear housing to which the stationary tube carrying the finger lever sector is fixed. Where there are several concentric shafts, as in this case, if they are to be prevented from rattling, it is necessary that a bearing bushing be provided for each shaft, rather than to rely upon the fit of one shaft in the other.

Instead of a bevel pinion and sector, a pair of screws and nuts may be used for transmitting the control motion at the bottom of the steering gear housing. The more elaborate de-

signs provide a screw, nut and trunnion mechanism of the same type as used for steering cars, the whole mechanism being inclosed. In the simpler designs the nut and its trunnions are dispensed with, a pin projecting laterally from a lever arm extending into a spiral slot cut in a cylinder secured to the control shaft.

Bowden Wire Mechanism—The Bowden wire mechanism, which is used to some extent for the control of the throttle and the timer, more particularly in England, consists mainly of two

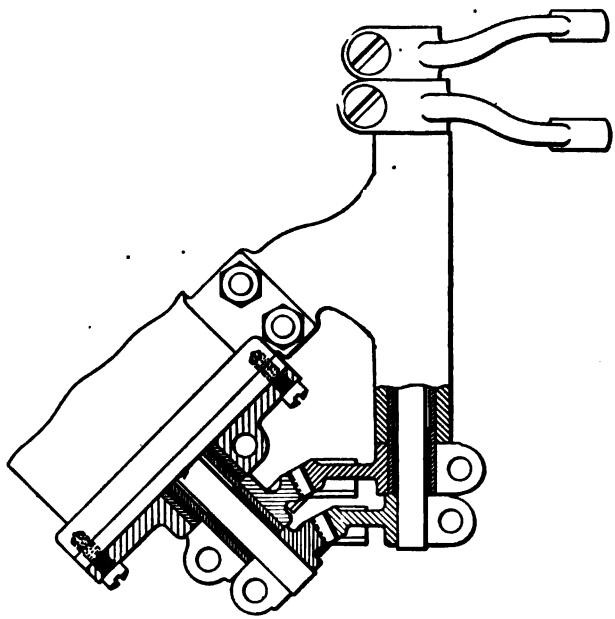

FIG. 295.—CONTROL REDUCING GEAR.

parts, a closely coiled and practically incompressible spiral wire, constituting what is termed the outer member, and a practically inextensible wire cable threaded through the above, and known as the inner member. The principle of the mechanism is illustrated in Fig. 296. *A* is the actuating lever; *B*, the operated lever; *C*, the inner member; *D*, the outer member; *E*, an adjustable stop; *F*, a lock nut, and *G*, the abutments or brackets. It is obvious that since the outer member is incompressible and the inner member inextensible, if the lever *A* is moved around its

fulcrum, the end of lever *B* will be moved with relation to the abutment *G*.

Control Levers on Steering Post.—Fig. 297 illustrates a construction in which the control levers are mounted on the steering post underneath the steering wheel. This design is used more particularly on commercial cars and the lower priced pleasure vehicles, being probably the simplest possible arrangement of the control. The shafts for the spark and throttle are arranged concentrically and are supported in bearings secured to the steering column. A sector is also cast integral with the top supporting

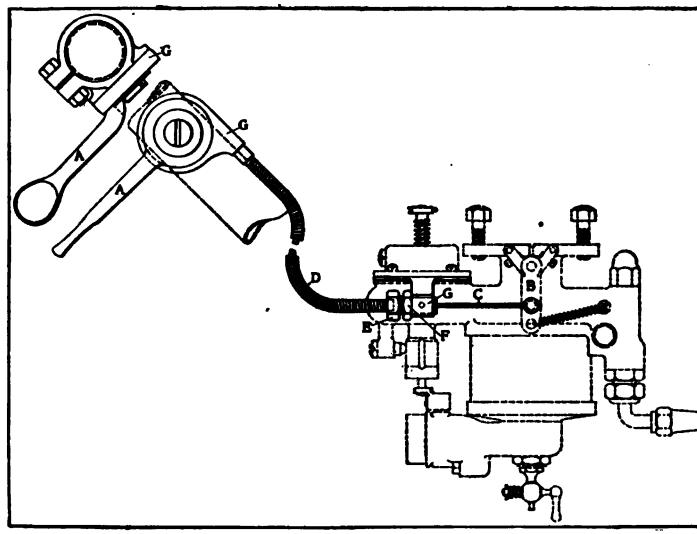

FIG. 296.—BOWDEN WIRE MECHANISM.

bearing, and the control levers are pressed into contact with the sector by means of a coiled spring surrounding the power part of the central control shaft, the spring pressing the tubular shaft upward and the solid shaft downward. Lever arms are secured to the lower ends of these shafts, and connection to the throttle and timer is made by links direct. The sector on which the levers move extends over an angle of about 90 degrees, and is usually placed in front of the steering column, as this location is most convenient for making connections from the lower ends of the shafts.

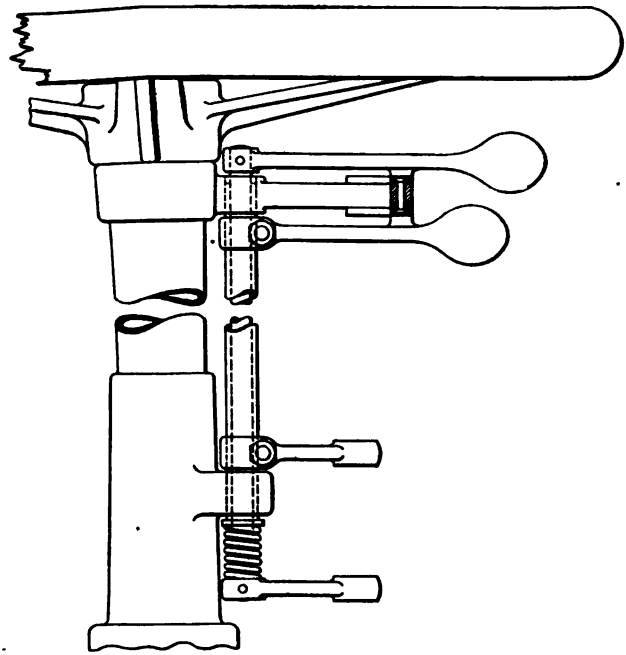

FIG. 297.—CONTROL LEVERS ON STEERING POST.

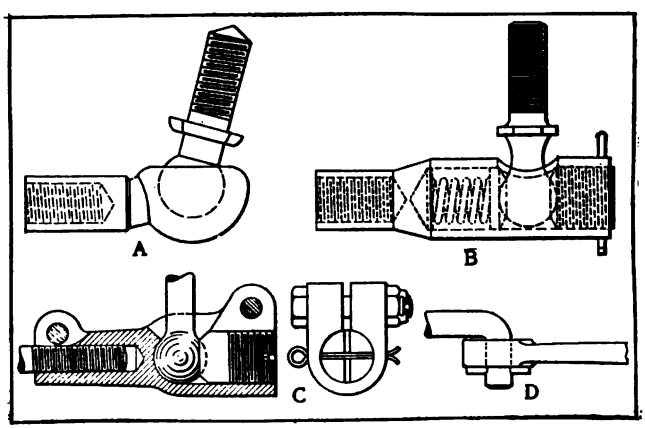

FIG. 298.—CONTROL JOINTS.

Control Joints.—In the connecting linkage, if two lever arms to be connected swing in the same plane a forked connector is employed, and a standard for such connector yokes and eyes has been worked out by the Society of Automobile Engineers. If the two arms do not swing in the same plane, as is often the case, a ball and socket type of joint is used. The links of the control mechanism are generally made of cold rolled steel, seven-thirty-seconds or one-quarter inch in diameter, and one part of the joint is screwed over the end of the rod. In cars sold at a very low price the end of the rod is sometimes bent at right angles and passed through a hole of slightly greater diameter in the end of the arm, a split pin being passed through the end of the rod. This type of joint rattles more or less, and is not very satisfactory. Fig. 298 shows three types of ball and socket joints for carburetor and spark connections. The one shown at *A* consists of a brass socket and a steel ball, the brass socket being bored out and having the edges spun in after the ball is in place. A well designed type of joint is shown at *B*. This resembles a steering drag link joint, except that only one spring is used whose object is to firmly press the socket blocks against the ball. No play can develop in a joint of this type, and therefore it remains free from rattle. The joint shown at *C* is similar except that the spring is missing and *D* shows the simple joint above referred to.

In cars which have two independent ignition systems it is necessary to make connection from the spark control to the two timers, and this is often accomplished by securing a bell crank to the top of the short vertical shaft shown in Fig. 295. On the other hand, many cars have been built in recent years, particularly abroad, without manual spark advance, and in that case only a single control lever has to be accommodated on the steering post.

Usually at least one of the devices that must be connected to the control levers is located on the opposite side of the chassis from the steering column, and the connection to it must then pass either around or through the engine. A short shaft may be carried in bearing brackets secured to the forward side of the dashboard, or to uprights rising from the sub-frame, but some manufacturers pass a shaft transversely through the engine base underneath one of the crankshaft bearings, thus eliminating unnecessary linkage. Great care is latterly exercised by designers to make the control linkage as simple and unobstrusive as possible. Thus, in the Fiat car the connecting link to the timer is run inside the sub-frame channel.

Accelerator Pedals—Most modern cars are fitted with both hand and foot control of the throttle. The throttle foot control device, generally referred to as the accelerator, assumes different forms, and three designs are illustrated in Figs. 299 and 300.

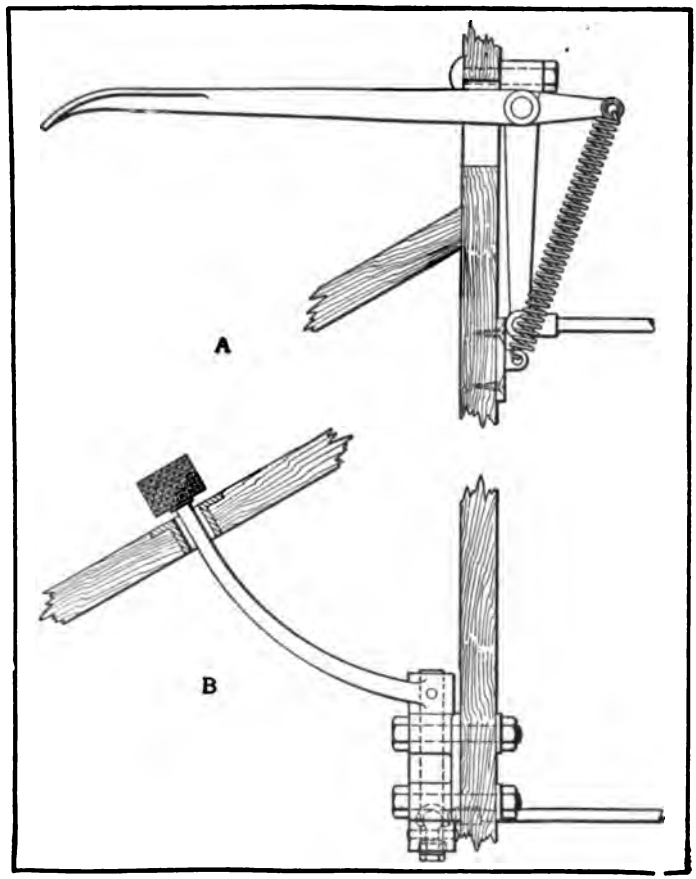

FIG. 299.—ACCELERATOR PEDALS.

The one shown at *A*, Fig. 299, is a pedal of the piano type, being pivoted to a bracket secured to the dashboard. At *B*, Fig. 299, is shown an accelerator which has a motion around a vertical axis, and is operated by a sideward motion of the forward part

of the foot, with the heel resting on the footboard. The bearing bracket for this lever is also secured to the dashboard, but in a much lower position than that for design A. In the design shown in Fig. 300 a foot button is used, together with a bell crank carried by a bracket secured to the under side of the toe board. All three designs have their adherents and all give satisfactory results.

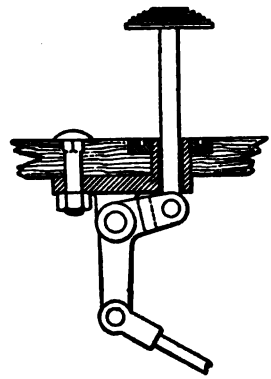

FIG. 300.—ACCELERATOR FOOT BUTTON.

Throttle Linkage.—The method of connecting up the throttle with the hand and foot controls is illustrated in diagram in Fig. 301. In this figure *A* represents the lever at the bottom of the steering column. Through the boss at the outer end of this lever passes a rod which joins to the throttle arm. It will be noticed that arm *A* contacts with a collar on the control rod on one side and with a coiled spring on the rod on the opposite side. The accelerator pedal *B* connects with the throttle lever through a control rod with an oblong hole at one end through which passes a pin extending laterally from the arm of the pedal. The accelerator pedal is normally held in the off position by a coiled spring anchored to a stationary part of the car.

The hand control mechanism is so arranged that by moving the throttle lever on top of the steering column through its entire range the throttle valve is only about half opened, and the

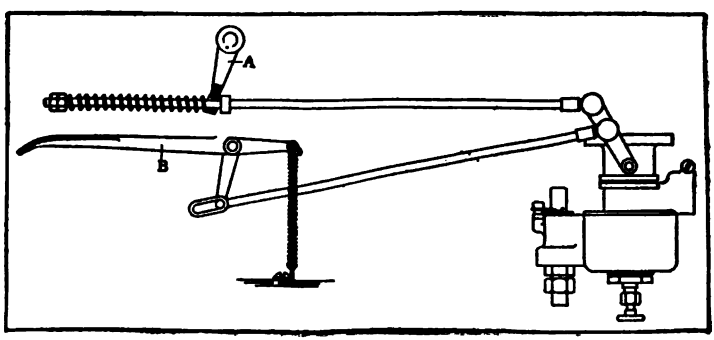

FIG. 301.—DIAGRAM OF THROTTLE CONTROL LINKAGE.

throttle can only be fully opened by depressing the accelerator pedal *B*. Operating the hand lever does not affect the position of pedal *B*, because the control rod connecting the pedal to the throttle arm has a sliding connection with the pedal. If the throttle is fully opened by means of the accelerator pedal and the driver then removes his foot from the latter, the throttle will return to the position for which the hand lever is set. The spring around the control rod which connects arm *A* to the throttle arm permits of fully opening the throttle by means of the accelerator pedal, even though the hand throttle lever may be set in the position corresponding to closed throttle.

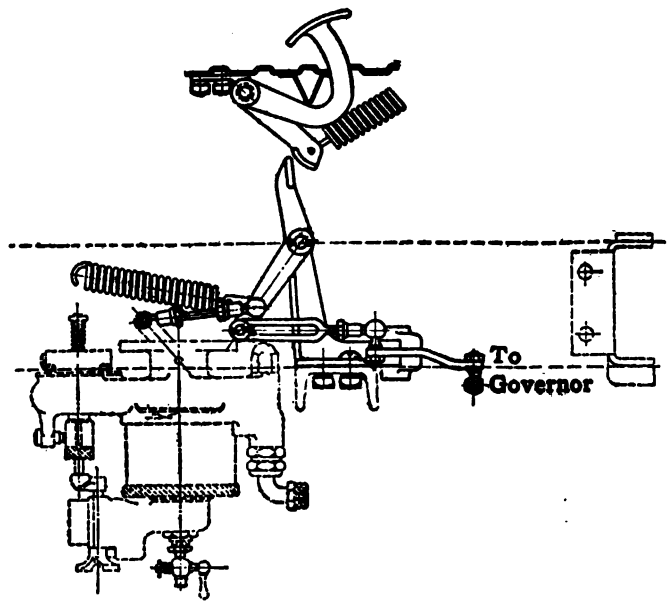

FIG. 302.—GOVERNOR THROTTLE CONTROL (AUTOCAR).

Motor trucks generally have their motors fitted with governors and require a special control mechanism. Two separate throttle valves may be used, arranged in the intake passage one above the other, one connected with the governor, the other connected to hand and foot controls, or simply to a hand control. The throttle controlled by the governor will remain fully open until the motor attains the speed for which the governor is set,

when it will begin to close. A simpler and more common method is to use only a single throttle valve to which the governor is connected by a slotted link. Fig. 302 shows the mechanism employed on the Autocar light truck. The engine is ordinarily under the control of the governor, but the driver may close the throttle independent of the governor.

Clutch and Brake Pedals—What may be called the conventional arrangement of the control for cars fitted with sliding gear transmissions, comprises two pedals located on opposite sides of

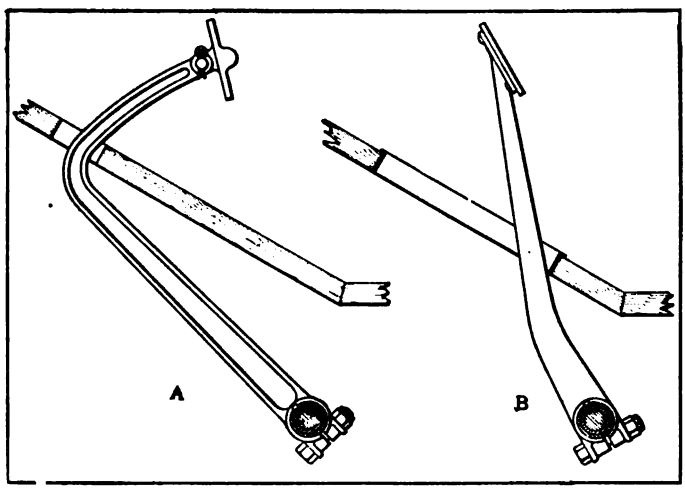

FIG. 303.—TYPES OF CONTROL PEDALS.

the steering post, the one on the left being the clutch pedal and the one on the right the brake pedal. The accelerator, if one is provided, is placed either between or to the right of these pedals for operation with the right foot.

Where a unit power plant is used the pedals are sometimes carried on the clutch housing, but the more common plan is to provide a tubular shaft extending partly or entirely across the frame, which is carried in bearing brackets secured to the frame. One pedal is secured to this shaft, and the other is free upon it or is secured to a hollow shaft telescoping over the other one.

There are two general types of control pedals, the straight and the bent type, as illustrated in Fig. 303. The pedals, of

course, have to pass through the toe board, and if they are straight they require a long slot in this board, whereas if they are bent, like the one shown at *A*, they require only a comparatively small hole to pass through. The straight pedal is lighter, but the bent pedal is now usually used because there is an advantage in having the driver's compartment closed off from the engine compartment as far as possible, so that a minimum of heat and noxious gases from the engine will reach the occupants.

Pedals vary in effective length from 12 to 16 inches. They are generally drop forged, and the section is made either I or T shaped, oval or rectangular, the I and oval sections predominating.

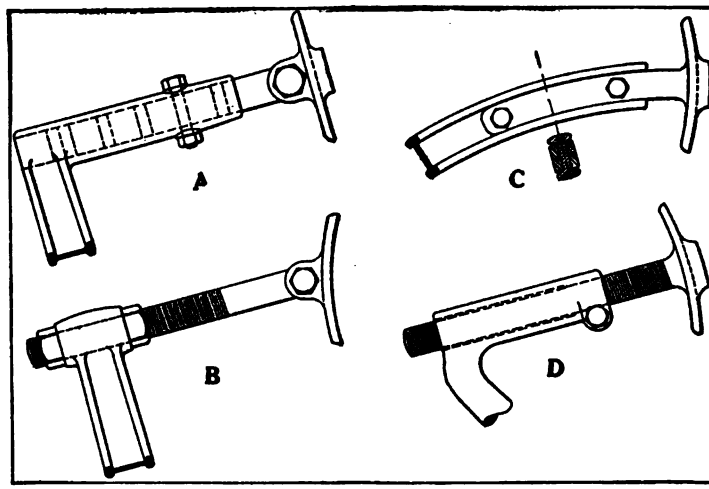

FIG. 304.—ADJUSTABLE PEDALS.

A 14 inch pedal usually has a section modulus near the hub of 0.10 to 0.12, while near the pad the section modulus may be reduced to one-fourth this value. Usually the dimension of the section in the plane of greatest stress is made equal to about twice its other dimension, but if the pedal is much off-set sideways, as is sometimes the case, it must be made stronger laterally. The inclination of the toe board in American touring cars varies from 35 to 45 degrees and this approximately determines the location of the big end of the bent pedal in the position of rest. The lighter end of the pedal should approximate an arc of a circle with the pivot axis as a centre, but usually it is turned so the pad comes somewhat higher.

when it will begin to close. A simpler and more common method is to use only a single throttle valve to which the governor is connected by a slotted link. Fig. 302 shows the mechanism employed on the Autocar light truck. The engine is ordinarily under the control of the governor, but the driver may close the throttle independent of the governor.

Adjustable Pedals—Considerable attention has been paid in late years to the problem of comfort for the driver, and this has led to the introduction of adjustable pedals. It is evident

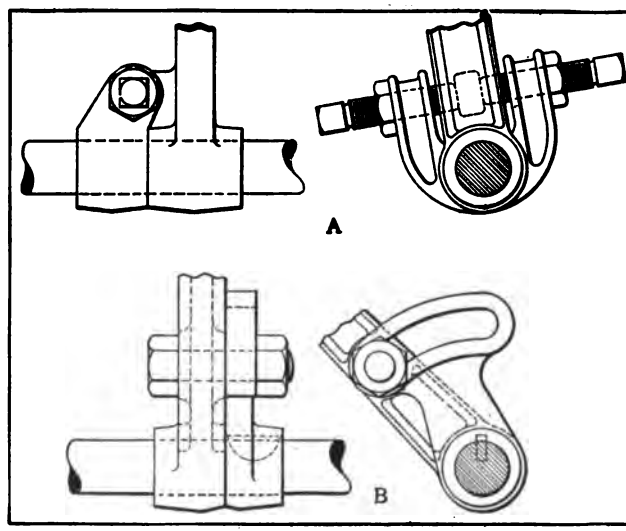

FIG. 305.—PEDALS ADJUSTABLE AT THEIR HUBS.

that a pedal suitably located for a tall person is quite inconvenient for a person of short stature, and vice versa. These adjustable pedals are usually bent at a right angle. Fig. 304 shows four different designs. In design A the pad is secured to a round rod fitting in a hole through the upwardly turned part of the pedal proper. The rod is drilled with a number of transverse holes, and may be secured in any one of several positions by means of a through bolt. In design B the shank of the pad is threaded and is clamped in the hub of the pedal by means of two nuts. In design C the pedal itself is made of I section, and the pad is made with double shanks fitting into the hollows in the

sides of the I, the two parts being clamped together by two through bolts, which may be passed through different holes in the pedal. This is one of the neatest designs of adjustable pedals, since the small end of the pedal may have the usual curvature and the section where the parts are joined is rectangular. In design D the shank of the pad is threaded and screwed into the drilled and threaded portion of the pedal, which latter is slotted and clamped tight on the shank.

Control pedals may also be adjusted at their base, and two methods of accomplishing this are illustrated in Fig. 305. In either case there are a free and a tight hub. In design *A* the

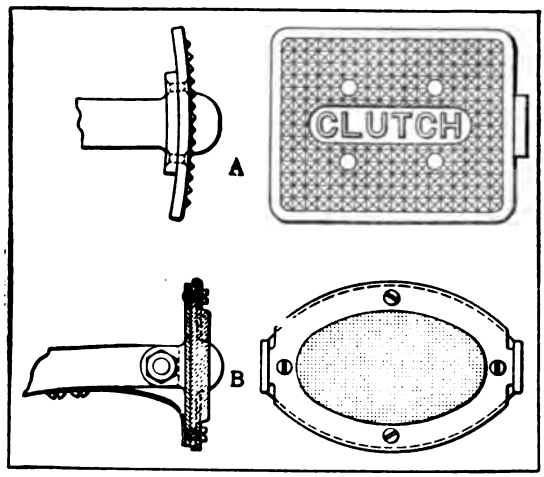

FIG. 306.—PEDAL PADS.

tight hub has two lugs with coaxial set screws, between the points of which is located a lug projecting laterally from the pedal. In design *B* the tight hub is provided with a slotted sector, cut with radial grooves on one side, to which the pedal can be clamped in different positions.

Pedal Pads—Pads are either secured rigidly to the pedal or hinged thereto. In the former case they are usually made convex toward the rear, so that as the pedal turns around its fulcrum a section of the pad always fits squarely against the sole of the driver's shoe. On the other hand, if the pad is hinged to the pedal it is made either plane or slightly concave, and in the higher grades of cars a spring is provided to hold the pad in

position when the foot is removed, so as to prevent rattling. Generally, however, the swiveled pad is allowed to hang in position under its own weight. Various means are resorted to in order to prevent slipping of the foot on the pad, the most common being the formation of diamond shaped points by forming V-shaped grooves on the surface of the pad diagonlly in two directions, these grooves being either formed in a drop press or cast on. (See *A*, Fig. 306.) Another method consists in providing the pad with either one or two ears, and several models in the higher priced class are provided with rubber covered pads. (*B*, Fig. 306.) These rubber coverings are used together with ears on the sides of the pad, and are evidently intended to prevent slipping of the foot in the direction of motion only.

There is absolutely no uniformity with regard to the form and dimensions of the pads. They are made square, rectangular, oval and round. If ears are provided on both sides the pad should be at least 3½ inches wide, but if no ears are used it is sometimes only 2½ inches wide. Some pads are larger in the fore and aft, others in the transverse direction.

Most clutches are disengaged by drawing them to the rear, and in the case of such clutches the pedal shaft is located on top of the clutch shaft. However, some forms of clutches, like the inverted cone clutch, are disengaged by a forward motion, and in this case it is more convenient to have the pedal shaft run underneath the clutch shaft. The latter arrangement has a further advantage in that if the service brakes act on the rear wheels the brake arm on the pedal shaft has to extend upward and comes in a more convenient position if the shaft is located lower. It is generally endeavored to place the clutch collar and pedal shaft in such relative positions that the shipper arms on the pedal shaft may connect directly to the clutch collar, but if this is not possible a pair of links may be interposed between the shipper arms and the clutch collar. The leverage of the clutch pedal is made between 4 and 6, depending upon the clutch spring pressure and structural considerations.

Interconnection of Clutch and Brakes—Formerly it was customary to interconnect both brakes with the clutch, so that if either brake were applied the clutch would first be disengaged. The idea which first led to this construction was, undoubtedly, that if the driver wants to stop quickly he should simultaneously disconnect the engine and apply the brake, so the driving effort of the engine ceases and no braking effort need be expended in dissipating the energy stored in the flywheel. The intercon-

nection is usually accomplished, in the case of the foot brake, as illustrated in Fig. 307, a projection on the hub of the brake pedal engaging with a projection on the clutch pedal whenever the brake pedal is moved to apply the brake. In the case of the hand brake the connection is made by means of a link connecting arms on the clutch pedal shaft and the brake lever shaft, respectively, with a sliding joint at one end so that the clutch can be disengaged without applying the brake. One disadvantage of interconnection is that with this scheme it is not possible to use the engine as a brake and use the mechanical brakes at the same time. For this reason the interconnection was first limited

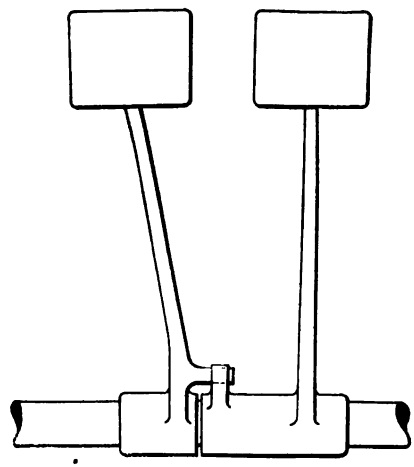

FIG. 307.—SERVICE BRAKE INTERCONNECTED WITH CLUTCH.

to one brake and is now generally dispensed with altogether. As a matter of fact, with the clutch and brake pedals in the usual position, it becomes second nature for the driver to press on both of them simultaneouslv if he wants to make a quick stop.

Single Pedal Control—In several makes of cars the clutch and service brakes are operated by a single pedal. The first motion of the pedal releases the clutch and a continued motion applies the brake. This necessitates a special operating mechanism for the clutch. One arrangement, involving the use of a

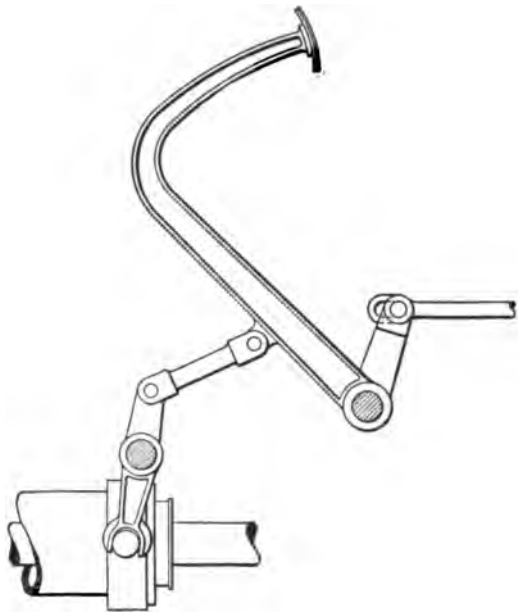

FIG. 308.—SINGLE PEDAL CONTROL, TOGGLE TYPE.

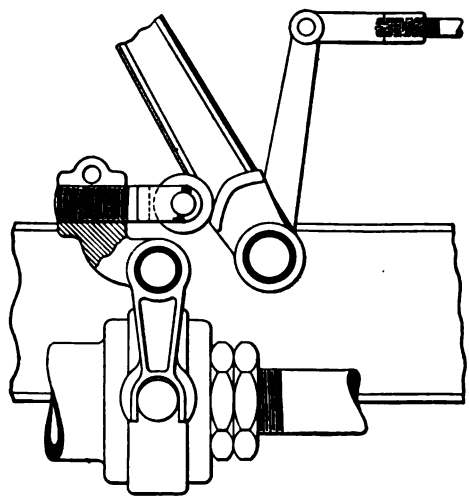

FIG. 309.—SINGLE PEDAL CONTROL, CAM TYPE.

toggle mechanism, is illustrated in Fig. 308, and another involving the use of a cam mechanism is shown in Fig. 309. In the former case the clutch collar is moved relatively rapidly during the first motion of the pedal and more slowly as the motion of the pedal proceeds. With a cam mechanism the motion of the clutch collar stops entirely after the clutch is fully disengaged, that portion of the cam coming last under the cam follower being concentric. In order to prevent an unduly large release motion of the clutch bands it is well to provide a sliding joint at the forward end of the brake rod (Fig. 308). This combination of clutch and brake control in a single pedal works very satisfactorily, but, of course, the pedal must have a somewhat greater range of motion than when it operates either the clutch or brake alone. The two pedal control has however practically become standardized and it is likely that single pedal control will disappear entirely.

Pedal Shaft Assembly.—In some designs of cars employing a housing for the clutch, the clutch pedal is supported by this housing and the brake pedal by a bracket secured to the frame side member. In cars with a sub-frame the pedal shaft bearings can be secured to this frame, whose top surface is usually 1 to 1½ inches above the clutch axis. Some designers secure these bearing brackets to the front side of a frame cross member and others to the inside of the frame side channels.

Right, Left and Centre Control.—Formerly the steering column was nearly always placed on the right side of the car, and the hand levers for operating the change gear and emergency brakes were located just outside the driver's seat on the right. Lately, however, more and more cars have the steering post on the left hand side and the hand levers in the centre. Centre control may also be combined with right hand drive, and left hand control with left hand drive. The argument in favor of left steering is that with the rule of the road compelling drivers to keep to the right, they can much better gauge the clearance when meeting other vehicles, if they are seated on the left side. On the other hand, the driver is at a disadvantage when overtaking a vehicle or drawing up at the curb, as he is then on the "off" side. The advantage of control levers on the left side is that if the vehicle is drawn up alongside a curb both the driver and front seat passenger can get into the car without first walking half way around it. However, if the levers are on the left hand side they must be operated by means of the left hand, which usually is not as dexterous as the right hand. This is one of the reasons for

the increasing popularity of centre control. Another reason is that if the change gear lever is located at the centre it may be mounted directly on top of the change gear box, thus doing away with superfluous connections. Finally, if the gear and brake levers are in the centre the outside of the body is smoother or "cleaner."

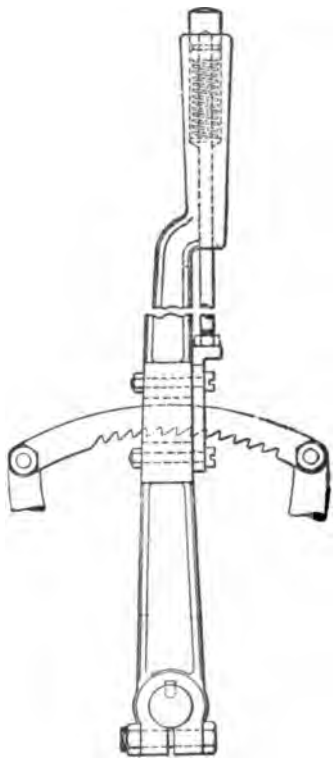

FIG. 310.
THUMB LATCH LEVER.

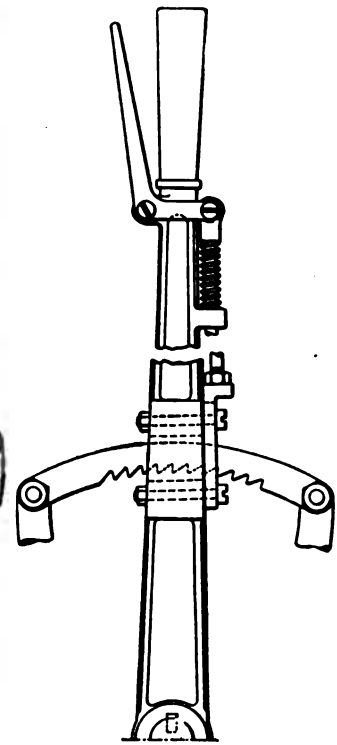

FIG. 311.
SPOON LATCH LEVER.

Control Levers.—Brake and change gear hand levers are generally drop forged with a rectangular, oval or I section, but cast steel or bronze levers are also used. In pleasure cars the length of these levers generally varies between 20 and 24 inches, depending upon the height of the seat. The maximum pressure which a driver is ever likely to exert against these levers is 100

pounds. Thus, if the length of the lever from the axis to the middle of the handle be 20 inches, the bending moment at a distance of 1 inch from the axis is 2,000 pounds-inches. Now, let us suppose that the section is to be rectangular, with a height twice the width. Then, for a stress in the material of 15,000 pounds per square inch, the equation of moments is

$$15{,}000 \frac{b\ d^2}{6} = 15{,}000 \frac{d^3}{12} = 2{,}000$$

$$d^3 = 1.6$$

$$d = 1.17\text{—}\textit{say, } 1\ 3/16\ \textit{inch}$$

$$b = 19/32\ \textit{inch}$$

An elliptic section of twice the height as the width has a section modulus of $\frac{d^3}{20}$ approximately, and the necessary height d for the above case figures out to 1.385—say, 1⅜ inches. For light cars the section of the levers can be calculated on the basis of a maximum pressure of 50 pounds, because on these cars less effort is required to operate the gears and brakes and the driver knows that he cannot expend his whole strength on the levers.

The change gear lever of selective type change gears moves in an H sector or gate, and does not require a latch to hold it in position. However, a latched lever is always used with the progressive gear control, and the emergency brake lever is also provided with a latch. There are two general types of latch levers, illustrated in Figs. 310 and 311, respectively. The former is known as the thumb latch and the latter as the spoon latch. The operation of these latches is self-evident and need not be described. Both levers illustrated are designed as brake levers, and it may be pointed out that if the lever is a "push lever," applying the brakes as the driver pushes it away from himself, the latch spoon must be on the forward side of the grip, whereas if it is a "pull lever" the latch spoon must be on the back. The hand grip is generally made of circular section, and often it is covered with a brass tube which is screwed or welded on. Plating the grips has proven unsatisfactory, as even a heavy coat of plate soon wears off. If no brass casing is used the handle is generally made tapering, with the largest diameter at the top. For all except the smallest cars the handle can be made ¾ inch in diameter if parallel, and from ⅝ to ⅞ inch if tapering.

The two levers are generally arranged to turn about a common pivot axis, and the brake lever is the one farthest away from the driver. Near its big end it is provided with a central

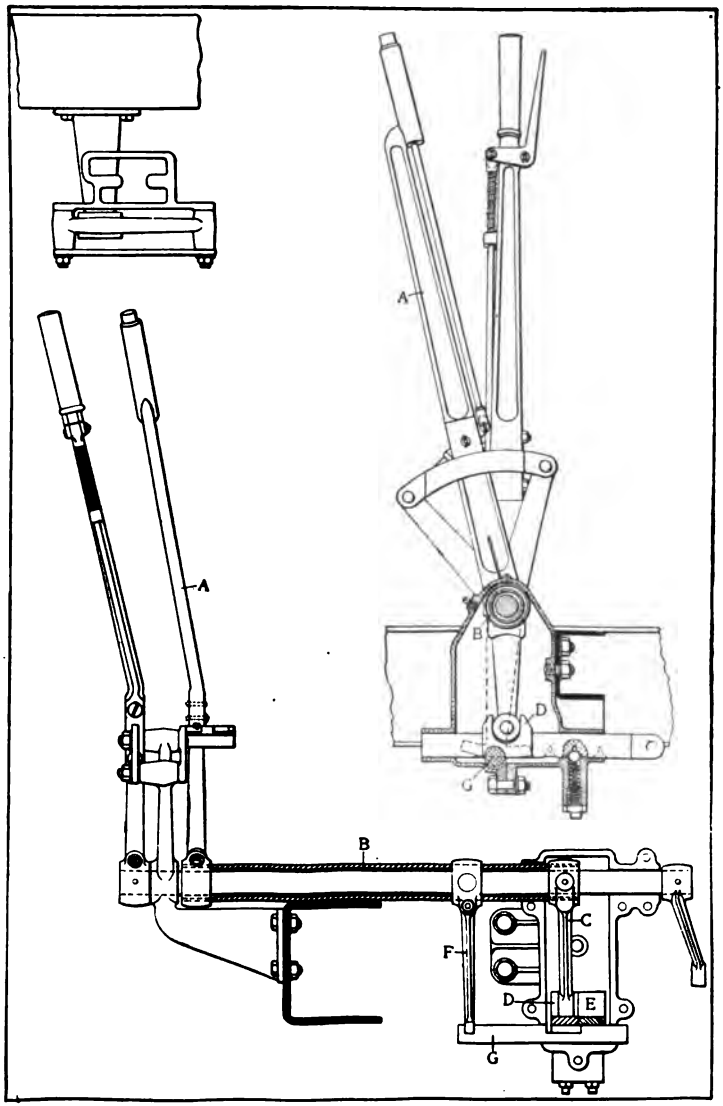

FIG. 312.—SLIDING LEVER SELECTIVE GEAR CONTROL

slot through which passes the ratchet sector. Ball ended change gear levers are now used to quite an extent. In England balls of hardwood are sometimes forced over the top ends of the levers and held in place by screws. The levers are often bent laterally because of the bulging form of the body and in order that there may be plenty of clearance between the grips of the two. It is also a good plan to make the brake lever of such length that its grip comes somewhat higher than that of the gear lever.

Selective Control.—There are three general systems of selective control. The first of these comprises a sliding shaft to which the control lever is rigidly secured and which at its inner end carries a downwardly extending arm which is adapted to engage into a slot on one or the other of the sliding bars. A typical control of this type is illustrated in Fig. 312. The gear control lever *A* is clamped to the hollow shaft *B* which at its opposite end carries the arm *C*, whose free end is adapted to engage into slots on the slider bars *DE*. Lever *A* moves in the sector. When it is in the slot nearest the car frame, arm *C* connects with slider bar *E* which controls the first speed and reverse gears. Moving the hand lever to the rear gives the first forward speed, and moving it to the front the reverse. When the hand lever is in the slot farthest from the car frame, arm *C* connects with slider bar *D*, and moving the lever forward gives the intermediate speed, while moving it backward gives the high speed or direct drive. Arm *F* controls the locking bar *G*, shifting it in the direction of its axis the same distance as the tubular shaft *B* is shifted by means of levers *A*. The slider bars are provided with a slot on their under side which allows the locking bar to pass when they are in the neutral position. The locking bar has a slot on its upper side, and when this slot is underneath a slider bar it allows that bar to be moved in the direction of its length, while the other bar is locked in position. A spring-pressed ball engages with conical holes in the slider bars, to help the driver find the position of correct mesh.

The second type of selective gear control, known as the swinging lever control, is illustrated in Fig. 313. The control lever is pivoted to a hub which is free to turn on the control shafts. At the sides of the control lever there are two short levers, which are fast upon concentric control shafts. Each of the control shafts carries an operating arm inside the frame member, each operating arm being connected to one of the slider bars. The upwardly extending arms are provided at their upper

end with lugs bent at right angles, between which lugs the control lever engages when it is pressed in the direction of the particular short lever. The control lever is normally held in the neutral position by two flat springs secured to the two short levers, respectively. Thus, when the control lever moves in one of the slots of the quadrant it is connected to one of the short levers and turns the control shaft to which that short lever is secured. Vice versa, when the control lever moves in the other slot of the quadrant, it operates the other short lever, and, consequently the control shaft to which that lever is secured. The slotted ends of the short lever arms may extend right into the H quadrant.

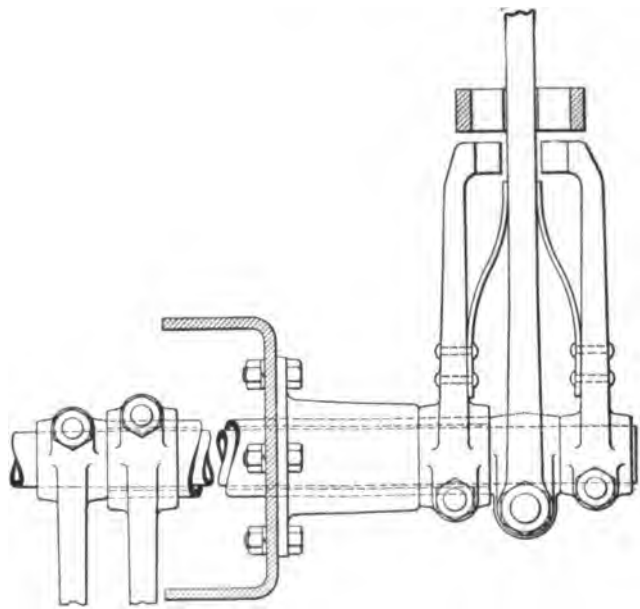

FIG. 313.—ROCKING LEVER SELECTIVE GEAR CONTROL.

The third type of gear control is represented by the ball-supported lever class of which the Reo, illustrated in Fig. 314, was the prototype. This is used exclusively for centre control as the gear level is mounted in a tubular projection cast on the cover plate of the gear housing. The lever has a ball support on two rings of bearing metal of which the lower is fitted against a shoulder in the tubular projection and the

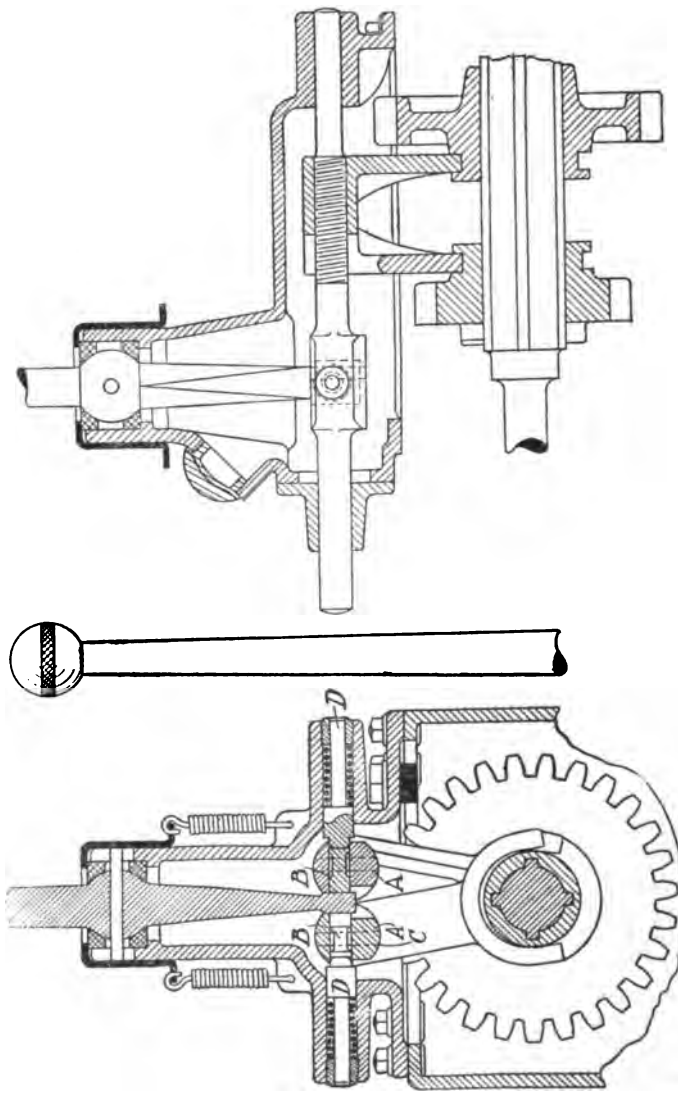

FIG. 314.—BALL MOUNTED CONTROL LEVER (REO).

upper is held in place by a sheet metal cap drawn down by coiled springs anchored to the cover plate.

The lower end of the lever is of flat cylindrical shape and is adapted to engage into slots in the sliding bars *A A*. Transverse holes are drilled through these sliding bars at that part where the slots are, and each hole contains a steel plug *B*. This plug is reduced in diameter at the middle of its length and a pin *C*, shown in dotted lines, is put through the sliding bar in such a position that it passes through the depression of plug *B* and prevents the latter from falling out when the sliding bar is handled separately, as in the repair shop. Locking bolts *D D* are located in bosses cast on the cover plate and are forced by coiled springs toward the sliding bars. The reduced inner end of these locking bolts is of the same diameter as the hole in which the plug *B* is located. With the gear lever in the central position, as shown, both sliding bars are locked and the lever, therefore, cannot be moved in a fore-and-aft plane. If the ball handle of the lever is swung to the right the lower end of the lever will force the plug *B* entirely into the left sliding bar, forcing the locking bolt out of it, whereupon the sliding bar may be slid forward or backward to engage the gears. Meanwhile the right sliding bar is securely locked against endwise motion. It will be noticed that the shipper levers are screwed over the sliding bars for purposes of adjustment.

While all the different designs of selective control may be classed under one of the above heads, there are numerous variations in detail. Thus, the swinging lever, instead of being pivoted at its end, may have the pivot at some distance from the end, and the end may be connected to a sliding shaft adapted to engage with one or the other of the slider bars. In some designs a control lever is pulled by a spring in the direction of the outer slot in the quadrant, one advantage of which is that there is little danger of inadvertently engaging the reverse gear when changing from low to second, or from high to second.

In the past considerable trouble has been experienced in the operation of cars because of the lack of uniformity in the arrangement of selective gear quadrants, that is, the relative arrangement of the different gear positions. This made it awkward for a driver accustomed to one make of car to drive another with the gear positions differently arranged, and even involved an element of danger. In order to do away with this state of affairs the Society of Automobile Engineers undertook

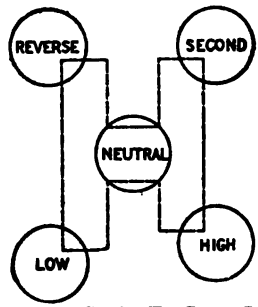

FIG. 315.—S. A. E. GEAR LEVER POSITIONS.

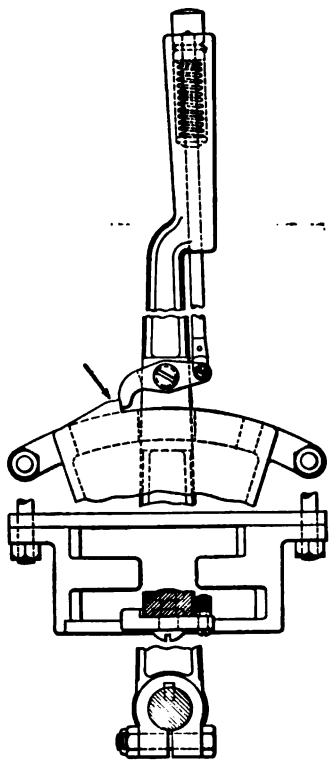

FIG. 316.—REVERSE SLOT BLOCK.

the work of selective gear quadrant standardization and evolved the preferred arrangement shown in Fig. 315. The brake lever is usually pulled to the rear in order to apply the brake, although there is also some variation from this practice.

In selecting this quadrant one point that was kept in mind was that it is desirable to have the gear lever in the high speed position far removed from the brake lever in the off position, so that there is no danger of accidentally getting hold of the gear lever when wishing to stop quickly in an emergency. Further, with control levers inside the body, it is desirable to have them close together in the lateral direction when the gear lever is in the high gear position (which it is most of the time) so there will be the least interference with lap robes, etc.

Reverse Lock-Out.—In order to obviate the possibility of accidentally engaging the reverse gear, a block is provided which blocks the slot corresponding to the reverse until after a latch bolt has been drawn out of place. Such a block is illustrated in Fig. 316. The change gear lever is provided with the usual thumb button, which, however, is not pressed as long as the driver wants to drive in the forward direction. This thumb button

connects with a short double armed lever pivoted on the side of the gear lever, with a down turned forward end which abuts against a raised portion on the H quadrant as the gear lever is about to enter the reverse slot. The operator must then press on the thumb button before the reverse gear can be engaged.

Clutch and Change Gear Interlock—In order to prevent shifting of the gears while the clutch is engaged, some designers provide an interlock between the gear sliding and clutch operating mechanism. This may be so arranged that the gear cannot be shifted unless the clutch is out, and the clutch cannot be engaged unless the gears are in full mesh. Of course the former function is the most important and some interlocks

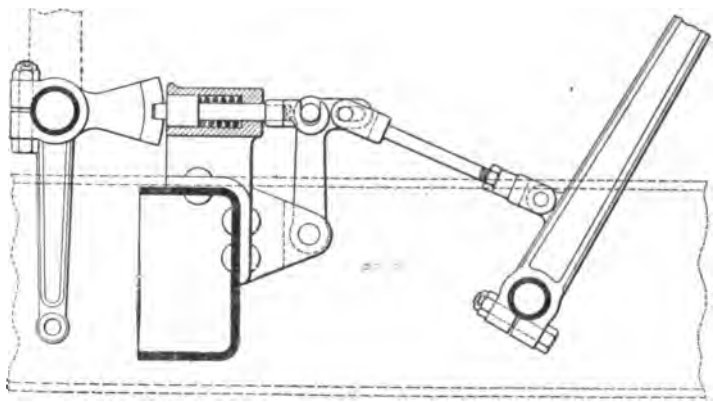

FIG. 317.—CLUTCH AND GEAR INTERLOCK.

are designed for it alone. A diagram of one arrangement is illustrated in Fig. 317. A sector is secured to the gear lever shaft and has a slot across its face parallel with the shaft into which a latch bolt engages when the gear lever is in the neutral position. This latch bolt is operated by means of a linkage from the clutch pedal shaft. It will be seen that with the latch bolt in the slot on the sector the gear lever cannot be moved into any of the slots of the gate.

In pleasure cars the range of motion of the brake lever handle should not exceed 16 inches, and the gear lever motion should be less for the sake of convenience in operation. Selective gear control levers generally move only about 8 inches. Control shafts and other parts of a large car should be designed to have a resisting moment of 2,000 pounds-inches, with a stress of about

15,000 pounds per square inch for low carbon steel. English designs generally make their gear quadrants in the form of a box, the object being to protect the selector mechanism and its bearing from mud, etc.

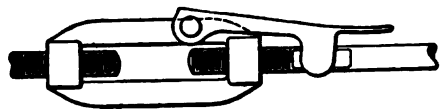

FIG. 318.—TURNBUCKLE ADJUSTMENT FOR BRAKE ROD.

Brake and gear control shafts are generally arranged concentrically, though occasionally they are carried in separate bearings parallel and close together. When arranged concentrically the brake control shaft is mostly the inner one, though the reverse arrangement is also met with.

Brake Rod Adjustment.—Fig. 318 shows a turnbuckle adjustment for brake rods which is provided with a handy locking device. The ends of the two rods connected are threaded right and left respectively. A clamp made of sheet brass is hinged

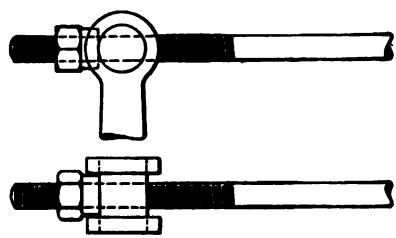

FIG. 319.—SCREW ADJUSTMENT FOR BRAKE ROD.

to the buckle and its opposite end is forced over a flattened portion of one of the rods, thus preventing unscrewing of the turnbuckle. Another form of adjustment, seen particularly on French cars, is shown in Fig. 319. The rod is shown screwed through the pivot pin, but it may also be held between two nuts on opposite sides of the pin. It is customary to make the diameter of the trunnion equal to twice the diameter of the rod.

CHAPTER XVII.

THE FRAME AND ITS BRACKETS.

Automobile frames are almost exclusively made of pressings from sheet steel. Laminated wood and armored wood frames are used by a few manufacturers of pleasure cars, and rolled section steel frames by some makers of commercial cars.

Materials.—Originally pressed steel frame members were made of cold rolled Bessemer steel, with a carbon content of about 0.10 per cent. Bessemer steel has since been discarded in favor of open hearth steel, and while cold rolled sheets are still used in most cases, hot rolled stock has also come into use. Frames are also made of chrome-nickel steel. Alloy steel frames are now always heat treated, it having been found that without heat treatment the gain in elastic limit hardly warrants the additional cost of the special steel.

The most widely used frame material at the present time is open hearth carbon steel of about 0.20 per cent. carbon content. In the annealed condition such steel has an elastic limit of about 35,000 pounds per square inch. Steel with a somewhat higher carbon content, about 0.25 per cent., is also used, and has a somewhat higher elastic limit, but is not as malleable as the low carbon product. The chief reason for using cold rolled steel is because of the natural bright finish of this steel as it comes from the mill.

On page 473 are given the physical properties of three steels recommended for use in pressed steel frames by the Society of Automobile Engineers. Two of these are carbon steels and the third is an alloy steel.

Sheet steel for frames is measured by the United States sheet metal gauge, and is furnished in thicknesses of 0.125, 0.156, 0.187 and 0.250 inch.

Frame Sections.—The side rails of automobile pressed steel frames are invariably made of channel section, with the open

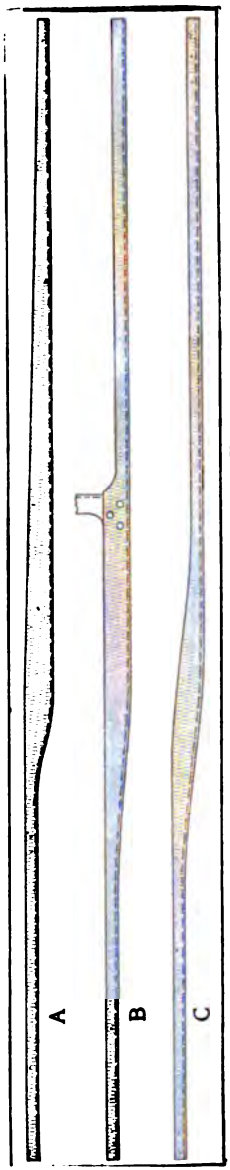

FIG. 319A.—DESIGNS OF INSWEPT FRAMES.

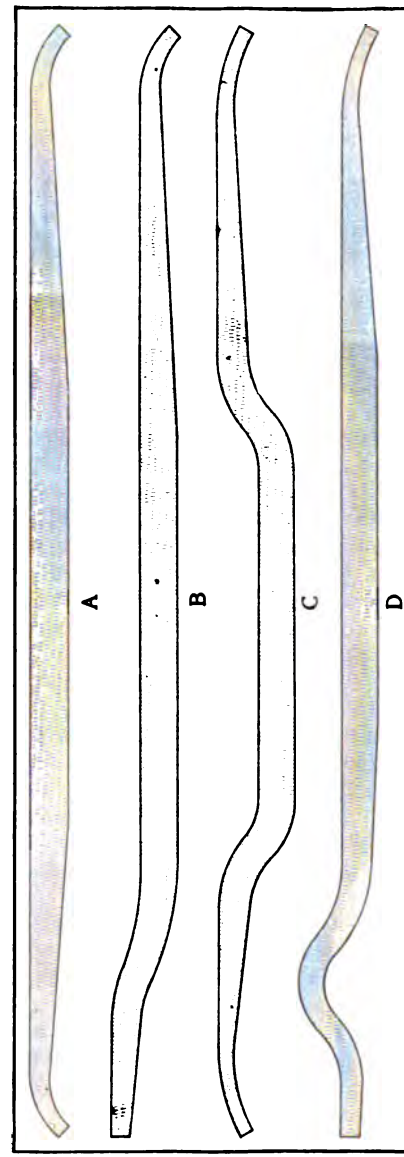

FIG. 320.—SIDE VIEWS OF FRAME RAILS.

side turned inward. Most of the cross members employed are also of channel section. The side rails are the most important parts, they being subjected to the greatest unit stress and constituting the bulk of the weight. The height of the section is constant over a certain portion at the middle of the rails, generally about one-third the whole length, and decreases uniformly toward both ends. Straight side rails are by far the cheapest to produce, and are generally used for low priced cars, but in the larger size vehicles it is necessary to narrow the frame in front in order to enable the car to turn in a circle of reasonably small radius, and to give it a single or double drop, or a "kick up" over the rear axle, in order to bring the centre of gravity down low without inordinately reducing the clearance between the frame and axles required for proper spring action.

S. A. E. FRAME STEELS.

Chemical and physical properties recommended as embodying current practice minima:

Chemical		Elastic Limit, Lbs. Per Sq. In.	Reduction of Area, per cent.	Elongation in 2" per cent.
S. A. E. Steel 1020 Carbon Steel (.15-.25 Carbon)	Natural	35,000	45	25
S. A. E. Steel 1025 Carbon Steel (.20.30 Carbon)	Natural	40,000	45	20
	Heat Treated	60,000	50	20
S. A. E. Steel 3230 Nickel Chromium (.25-.35 Carbon)	Heat Treated	85,000	50	18

Insweep and Drop.—The insweep of the frame at the front, to reduce the turning radius, confronts designers with a difficult problem, as it imposes a twisting moment on the frame bar at the bend, and a light channel section has very little resistance to twisting strains.

When pressed steel frames narrowed in front were first used the "insweep" was generally in the form of a compound curve of very short radius. This greatly weakened the frame and often led to trouble. At present it is customary to extend the insweep over a great length and to increase the width of the flanges at the frame. Several designs of frame bars inswept in front are shown in Fig. 319A. In design *A* the inner edge of the flange runs parallel with the longitudinal axis of the car up to the end of the offset, whence it runs in a straight line to the rear end, where the flange is made as wide as at the front end. In design *B* the inner edge of the flange runs parallel with the car axis to a point just beyond the intermediate cross member, beyond which the flange is of the same width as in front. In design *C* the flanges are widened only at the offset.

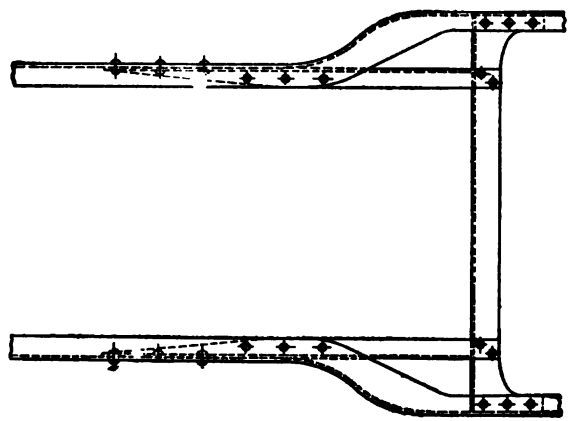

FIG. 321.—INSWEPT FRAME REINFORCED.

Fig. 320 shows side views of four types of side rails, *A* being the ordinary straight rail; *B*, a rail with a single drop; *C*, a rail with double drop, and *D*, a rail with a kick-up over the back axle.

The greatest offset in the front part of the frame side rails is probably required in taxicabs, whose frame must be very narrow in front in order to admit of turning around in an ordinary city street without backing, and comparatively wide in the rear so the rear seat will accommodate three passengers without crowding. This problem is sometimes solved by

using channel section reinforcements in the side bars at the front end, which extend to a cross member somewhat to the rear of the bend in the frame, as shown in Fig. 321.

To obviate the weakening effect of offset rails and still have the frame narrow in front the side rails may be made straight and set so as to approach each other toward the front.

Calculation of Side Rail Section—Each frame side rail constitutes a beam which is supported at four points, the points of spring attachment, as shown in Fig. 322. The reactions R at opposite ends of each spring will be equal, and the resultant of these two reactions acts on the frame midway between spring eyes or directly above the axle. In a pleasure car of standard design the weight on the frame is distributed more or less uniformly from a point substantially above the front axle to a point a little behind the rear axle, and, therefore, we will not be far wrong in considering the frame side bar a beam supported at two points, directly above the axles,

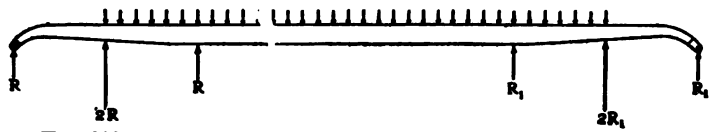

FIG. 322.—DIAGRAM OF LOAD AND REACTIONS ON FRAME RAIL.

and carrying a uniformly distributed load between points of support.

Let l = the distance beween supports (wheelbase), and W the weight carried by each frame rail, then the maximum bending moment, which occurs midway between supports, is $\frac{Wl}{8}$. It is evident that the modulus of the section at the point of maximum bending moment should be proportional to this moment. Calling the necessary factor of safety f, then

$$\frac{Wl}{8} = \frac{ZL}{f},$$

where Z is the section modulus and L the elastic limit of the material. Just what value should be given to f cannot well be determined from first principles. The above equation may be transposed to read

$$Z = \frac{Wlf}{8L}$$

The weight W on one frame rail is proportional to the total

weight of the car with load (W_1). Hence we may write

$$Z = \frac{a\,W_1 l f}{8\,L} = \left(\frac{af}{8}\right)\frac{W_1 l}{L}$$

Denoting the expression $\left(\frac{af}{8}\right)$ by c we have

$$Z = c\,\frac{W_1 l}{L}$$

In frames for pleasure cars built up to 1910 the average value of c was 0.12. However, when the fore-door type of body came into use considerable trouble was experienced from cramping of the front doors. These are located not far from midway between the points of support of the frame, where the deflection is the maximum. To obviate this cramping, the constant c is now made equal to about 0.16 for carbon steel and as high as 0.20 for alloy steel, in the case of high powered cars. For low powered cars, especially those of short wheelbase, like 20-25 horse power runabouts, a frame rail whose section modulus gives a value of 0.10-0.12 to the constant c is amply strong. Therefore, to sum up for pleasure cars:

$$Z = C\,\frac{W_1 l}{L} \qquad (74)$$

$c = 0.10$-0.12 for low powered small cars;
$c = 0.16$ for high powered cars with carbon steel frames;
$c = 0.20$ for high powered cars with alloy steel frames.

The fore-door body has made stiffness of the frame an important factor, and from this point of view the use of alloy steel offers little advantage.

In the above the frame rails have been considered as simple beams subjected to bending stresses and shear only. As a matter of fact, the rear springs usually are located outside the frame and the reaction at their points of attachment imposes a torsional stress on the side rails. However, very little torsion occurs, because the cross members take up these stresses. With the usual three-quarter elliptic rear springs the quarter elliptic members are often bolted directly to extensions of the rear cross member, and only the reaction at the forward spring shackle can produce trosion in the side rail. It, therefore, is not essential to consider the torsional moment of outside springs in the calculation of the frame section, but cross members should preferably be placed as close to the point of spring attachment to the frame as possible.

In motor trucks the bending moment on the frame rails follows a somewhat different curve, for the reason that usually the

load considerably overhangs the rear axle. C. F. Cleaver in the *Automobile Engineer* of August, 1912, published a diagram of bending moments and shear in the frame of a 4 ton truck of standard design, which diagram is herewith reproduced (Fig. 323). Of course, the weights of the individual parts of the mechanism are generally not accurately known when the frame is designed, and sufficiently close results will be obtained by assuming the total weight of truck and load and using a formula of the same form as (74) but with a different coefficient, because of the different weight distribution, speed and type of tires. as compared with pleasure vehicles. Commercial vehicle data

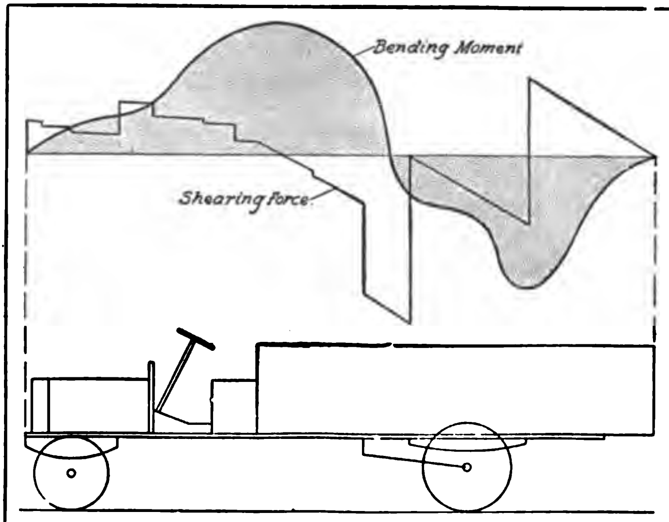

FIG. 323.—DIAGRAM OF BENDING MOMENTS AND SHEARING FORCE ON MOTOR TRUCK FRAME RAIL.

in the author's possession shows that in average modern practice

$$Z = 0.09 \frac{W_1 l}{L} \quad \ldots\ldots (75)$$

This equation is to be used only if the load overhangs the rear axle as much as in Fig. 323. If the overhang is much less a somewhat greater coefficient should be used.

The Society of Automobile Engineers has been endeavoring to standardize pleasure car frames and recommends the following practice:

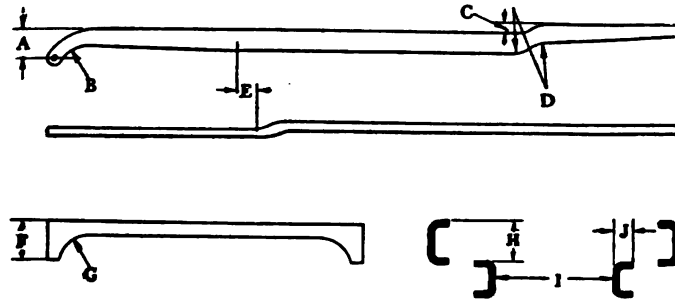

FIG. 324.—FRAME MEMBERS.

A—Amount of drop between top of side rail and front spring bolt:

4″	or 4½″	drop for	3″	side rail
4½″	or 5″	drop for	3½″	side rail
5″	or 5½″	drop for	4″	side rail
5½″	or 6″	drop for	4½″	side rail
6″	or 6½″	drop for	5″	side rail
6½″	or 7″	drop for	5½″	side rail
7″	or 7½″	drop for	6″	side rail

B—Represents radius of curve of bottom flange of side rail at front end:

8″, 12″, 16″, 20″ and 24″

C—Rear-end rise—amount of difference between level of frame at rear and top flange of side member:

2″, 3″, 4″ and 5″

D—Radii of combined curve in bottom flange of side member to make rise at C:

10″, 20″ and 30″

E—Side rail offset to commence at least 10″ back of rear end of front end taper.

CROSS MEMBERS

F—Recommended widths of gusset plate ends—4″, 5″ and 6″.

G—Radii of curved gusset plates to be 3″ and 4″. Straight gusset plates to be cut at angle of 45°.

Members with straight drops could be made to have drops vary in multiples of ½″, adopting a constant angle for the dropped portion.

H—Top of subframe to be on line with inner side of lower flange of side rail.

I—Width between bars for flywheel clearance to be 17″, 17½″ and 18″.

J—Recommended width of all engine bar flanges to be 1½″.

WIDTH OF FRAME

30" for front end of frame, the width in rear to vary with side rail offset.

Diameter of Rivet	Hot Riveting Diameter Drilled Hole	Spacing Distance Between Centres
5/16"	11/32"	1½"
3/8"	13/32"	1⅝"

RADIUS OF FILLETS

3/16" for sections below 5"
¼ for sections 5" and above.

MISCELLANEOUS

Length of straight centre sections of side rails to be designed in multiples of 2".

Taper of side rail ends to be 1/16" to 1". This taper coincident with centre sections in multiples of 2", will produce a depth of section at extreme ends of side rails varying in multiples of ⅛".

TABLE IX—SIDE RAIL SECTIONS.

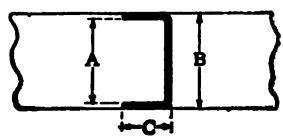

Designation.	C. Flange Width. In.	A. Punch Size. In.	B. Using 0.125 In.	Variable Outside Dimension, Using 0.156 In.	Using 0.187 In.	Using 0.250 In.
3	1½	2¾	3	3 1-16		
3½	1½	3¼	3½	3 9-16	3⅝	
4	1½	3 11-16	3 15-16	4	4 1-16	4 3-16
4½	1½	4⅛	4⅜	4 7-16	4½	4⅝
5	1¾	4⅝	4⅞	4 15-16	5	5⅛
5½	1¾	5⅛	5⅜	5 7-16	5½	5⅝
6	1¾	5⅝	5⅞	5 15-16	6	6⅛

This completes the specifications of side rails. It will be observed that standardization of this part has been carried farther than that of almost any other automobile part. Makers of automobile frames took an active interest in this work of standardization, as it enables them to turn out a great range of frames with a minimum investment in dies.

Following are the section moduli of these sections:

TABLE X—SECTION MODULI OF FRAME SECTIONS.

B.	C.	t.	Z.
3.000	1.5	0.125	0.66
3.500	1.5	0.125	0.81
3.062	1.5	0.156	0.86
3.9375	1.5	0.125	0.98
3.562	1.5	0.156	1.08
4.375	1.5	0.125	1.13
3.625	1.5	0.187	1.18
4.000	1.5	0.156	1.26
4.062	1.5	0.187	1.40
4.437	1.5	0.156	1.47
4.875	1.75	0.125	1.53
4.500	1.5	0.187	1.56
5.375	1.75	0.125	1.67
4.937	1.75	0.156	1.84
4.187	1.5	0.250	1.87
5.875	1.75	0.125	1.90
5.437	1.75	0.156	2.06
4.625	1.5	0.250	2.16
5.000	1.75	0.187	2.17
5.937	1.75	0.156	2.19
5.500	1.75	0.187	2.45
6.000	1.75	0.187	2.78
5.125	1.75	0.250	2.86
5.625	1.75	0.250	3.26
6.125	1.75	0.250	3.70

Following are the dimensions and constants of standard rolled steel channels sometimes used for truck frames:

TABLE XI—PROPERTIES OF ROLLED CHANNELS.

Depth.	Thickness of Web.	Width of Flange.	Weight Per Foot (Pounds).	Moment of Inertia.	Section Modulus.
5	0.19	1.75	6.5	7.4	3
5	0.33	1.89	9	8.9	3.5
6	0.20	1.92	8	13.0	4.3
6	0.32	2.04	10.5	15.1	5
6	0.44	2.16	13	17.3	5.8
7	0.21	2.09	9.75	21.1	6.0
7	0.32	2.20	12.25	24.2	6.9
7	0.44	2.30	14.75	27.2	7.8
8	0.22	2.26	11.25	32.3	8.1
8	0.31	2.35	13.75	36.0	9.0
8	0.40	2.44	16.25	39.9	10.0

The moment of inertia and section modulus as given in the above table apply to a neutral axis perpendicular to the web at the centre.

Cross Members.—Cross members are made of widely different forms, according to the parts they have to support, etc. At the ends they are made of an outside height equal to the inside height of the side rail section at that particular point, so as to fit into the side rail channel. In pleasure car frames there are usually

four cross members, one in front, one at the rear and two intermediate ones, though if a sub-frame is used there is generally only one intermediate cross member, back of the change gear box. The front cross member usually comes underneath the radiator, being dropped to accommodate the latter, and also carries the bracket for the starting crank. The two intermediate cross members generally support the change gear and they often have to be dropped to pass underneath the gear box or the drive shaft, arched to pass over the top of the box or shaft or made of

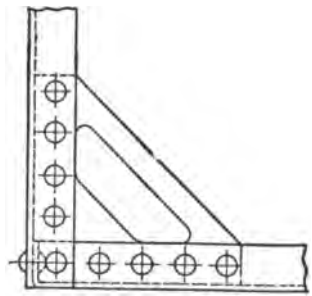

FIG. 325.—REAR GUSSET.

comparatively large height at the middle and with a hole through which the drive shaft passes. The rear cross member can generally be made straight, and it is customary to use a specially large gusset at the rear corner of the frame in order to prevent any tendency to distortion. A popular design of rear corner gusset is shown in Fig. 325. In England tubular cross members are used to quite an extent, and cross members of cast steel and manganese bronze are also in use.

Sub-frames—Sub-frames on which the engine and change gear are supported are still used to a considerable extent, although not as much as formerly. These, too, are generally made of channel section pressed steel, and are riveted to the forward and an intermediate cross member, being so placed that the top of the sub-frame comes flush with the inner side of the lower flange of the main frame rail. A typical sub-frame construction is shown in Fig. 326.

In designing drop bars, the radii of the outlines should be made as large as possible, as short curves are hard to draw. The width of the flanges should be made equal, or at least nearly so, and the ends of the bar should preferably be so designed that the flanges

are trimmed to the same length. Stock will be economized if an integral gusset is provided for on the lower flange.

Frame Joints—The individual parts of pressed steel frames are joined by riveting, either separate or integral gussets being used (*A* and *B*, Fig. 327). Two methods of riveting are in use, viz., cold riveting and hot riveting. In testing a hot riveted joint under tension in the plane of contact, as the tension assumes a certain definite value, there is a sudden increase in extension. This is due to the fact that up to this point the tension is resisted by the contact friction which in a hot riveted joint is very

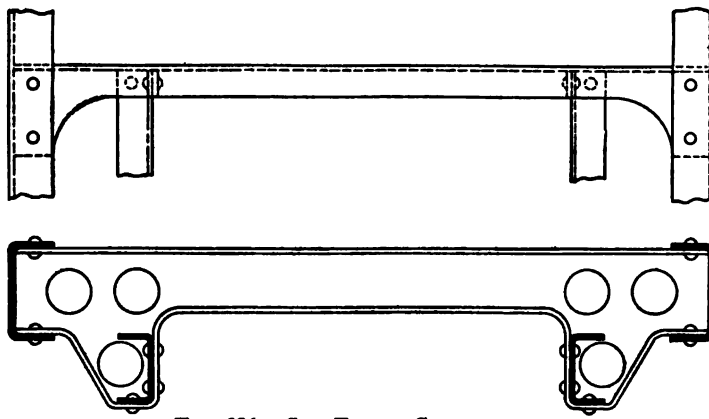

FIG. 326.—SUB-FRAME CONSTRUCTION.

considerable, because the rivet in cooling draws the two parts together with great force, and to the further fact that the rivet, also because of its contraction in cooling, does not entirely fill up the hole. With cold riveting the hole is completely filled by the rivet, but, on the other hand, the surfaces are not applied to each other with as great force. It seems that hot riveting, on the whole, has proven the most satisfactory and is now in general use. Two sizes of rivets are used, $\frac{5}{16}$ and $\frac{3}{8}$ inch. The holes for hot riveting for these two sizes are made $\frac{11}{32}$ and $\frac{13}{32}$ inch, respectively, and are spaced about 1½ inches. In riveting brackets to frame members, three rivets are often used. All rivet holes weaken the frame, but the weakening effect varies greatly with the location of the holes. A hole at the middle of the web has but little effect, but the opposite is true of a hole in one of the flanges. In this connection it is well to remember that the lower flange is under tension and the upper under com-

pression, the unit stress being the same in both, and since the compressive strength of frame materials is somewhat greater than their tensile strength, it is advisable to put rivet holes in the upper rather than in the lower flange, where this can be done just as well.

At the New York automobile show in 1906 the Darracq Automobile Company of France exhibited a complete sheet metal frame in one piece which aroused a great deal of curiosity at the time. It was undoubtedly made from separate stampings by means of the oxy-acetylene welding process which was then

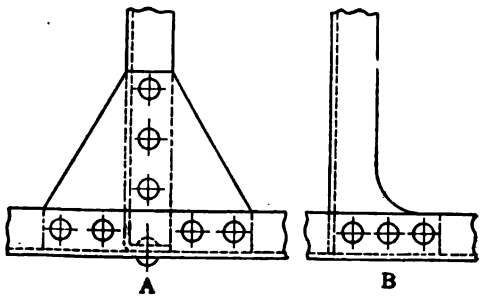

FIG. 327.—TYPES OF GUSSET PLATES.

in its infancy. The frame was highly polished and showed absolutely no evidences of joints. While it is quite possible to make rivetless frames in this way the advantages secured do not warrant the cost. In fact, a well made riveted pressed steel frame, of ample section for the load to be carried lasts well and generally gives very little trouble.

Underslung Frames—An underslung frame—that is, a frame located underneath the axles—is sometimes used because of the low centre of gravity it gives. By means of a raised sub-frame the engine and gear box are placed at about the same distance from the ground as ordinarily, because to lower them would mean reducing the ground clearance; but the frame, body and passengers are materially lowered, which lowers the centre of gravity of the whole car and increases its stability. Specially large wheels are employed in connection with underslung frames, which increases the ground clearance and incidentally tends to give a straight line drive. The frame is usually the lowest part of the car and has a ground clearance of 9 to 10 inches.

FIG. 328.—UNDERSLUNG FRAME RAIL.

Fig. 328 shows the general form of the side rail of an underslung frame.

Wood Sill Frame.—The H. H. Franklin Manufacturing Company uses a frame made of wood sills. Each sill is made of three laminæ of second growth white ash, which has been air seasoned and kiln dried in the plank, the laminæ being glued and screwed together, and so arranged that the grain in adjacent ones runs at a slightly different angle. The built-up sill is kiln dried at a somewhat lower temperature than the lumber, and is then shaped to the exact size required. Thin strips are then glued along the top and bottom edges to cover the joints in the main portion of the sills, so as to keep out moisture. Next, two side sills are placed in their proper relation to each other and connected by cross-pieces. The rear corners are metal bound and provided with 4 inch gusset blocks. The attachment of brackets, painting and varnishing complete the frame.

FIG. 329.—SECTION OF FRANKLIN WOOD SILL.

A wood sill of selected material and properly proportioned is stronger in a vertical plane than a steel frame rail of the usual proportions and of equal weight. Thus, according to tests made by the engineers of the Franklin Company, a pressed steel side rail having a section of 4½x1¾x⅛ inch, and a weight per linear inch of 0.408 pound, has a resisting moment of 114,830 pounds-inches, whereas an ash sill measuring 1¾x6 inches and weighing 0.266 pound per linear inch has a resisting moment of 142,275 pounds-inches. That wood sill frames are not more generally used is probably due to the difficulty of securing really faultless wood and to the very careful handling the wood requires in the process of manufacture, which makes the frame rather expensive. Besides lightness, it is claimed for the wood sill frame that it absorbs shocks and muffles noise.

Wood sills reinforced with steel flitch plates and square tubes filled with wood have also been used, especially abroad, but have been practically entirely discarded in favor of pressed steel.

Frame Trusses—Frame trusses in the past frequently were used as last resorts in cases where the frame was found to be too light for the load after the car had been built. It may be that this brought them into disrepute, for at present they are practically never used on pleasure cars and only on a few motor trucks. The use of trusses in railway cars is universal, and their use on motor trucks should permit of a considerable saving on the weight of the frame. The only objection that can be raised to a properly designed truss is, that if it should be improperly adjusted by an incompetent driver it would give trouble. Trusses are known as two panel or three panel, according to whether one or two struts are used. With a two panel truss the strut is preferably located midway between anchorages, and with a three panel truss the distance between anchorages should be divided into three equal parts by the struts. Probably the chief reason that trusses are now seldom used on motor trucks is that the bodies of these trucks usually overhang the rear axles to such an extent that the bending stress in the frame directly over the rear axle is as great as at the point of maximum bending moment between axles. Trusses, of course, are of particular value in vehicles of very long wheel base and with comparatively little overhang. The best anchorage points are the points at which there is no bending moment, which is some distance inside the axles.

The tension in the truss rod and the compression in the strut can be easily calculated. Suppose that the load on the frame between the points of anchorage is evenly distributed and that the truss is so adjusted that it relieves the frame at the point where the strut is secured to it of all bending stress. Then (Fig. 330) calling the total weight on the frame between truss anchorage W, the compression on the strut is $W/2$ and the tension in each truss rod is $W/(4 \sin \alpha)$. Since the load on the truss is a dynamic one,

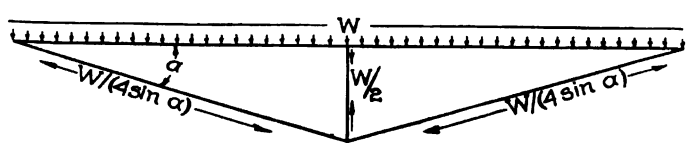

FIG. 330.—DIAGRAM OF FRAME TRUSS.

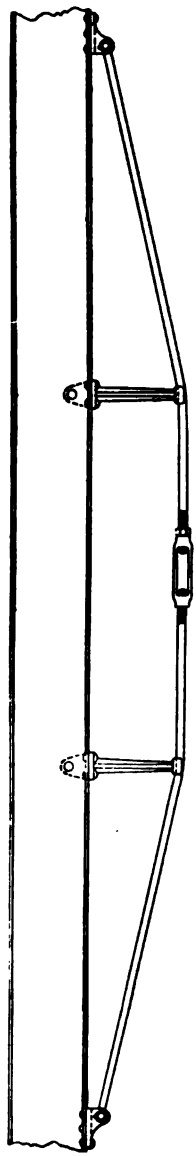

FIG. 331.—TRUSSED TRUCK FRAME.

a safety factor of at least 4 should be allowed in both the truss rod and the strut. The stress on the strut depends merely upon the weight carried by the frame, but the tension in the rods is less the greater the height of the strut or struts and the shorter the length of the end panels.

Some means of adjustment must be provided. Either the ends of the truss rods may be threaded and provided with nuts; a turnbuckle may be inserted in one-half of the truss rod, or the strut may be so arranged that it can be lengthened or shortened. Fig. 331 illustrates a design of trussed frame for a motor truck.

Spring Brackets—The chassis frame is carried on the springs through the intermediary of spring brackets. At the front semi-elliptic springs are used, as a rule, which require a bracket at either end. The forward bracket is generally made in the form shown in Fig. 332. It fits into the downwardly curved forward end of the frame channel to which it is secured by one rivet in the vertical plane at the extreme forward end of the channel, and three or more horizontal rivets. In the cheaper cars and in commercial vehicles this bracket is usually made in the form of a plain forked connector, but in the design illustrated the spring eye is surrounded by a shroud which extends a little below the axis of the spring bolt and completely encloses the spring eye. This makes for a neater appearance than an open forked bracket. The eye bolt can be held from rotating in the bracket either by a small pin extending into its head from underneath and into the prong of the fork, or by a small key.

The rear ends of semi-elliptic front springs are connected to the frame brackets by shackles, and these shackles may work

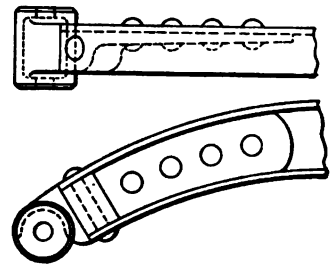

FIG. 332.—FRONT SPRING FRONT BRACKET.

either under compression or under tension, the brackets being designed accordingly. Simplicity of construction is in favor of shackles under compression, and these are now generally used, even on the most expensive cars. Fig. 333 shows two forms of front spring rear brackets for shackles working under compression. That shown at *A* does not require any rivets through the flange of the frame rail, and therefore may be considered the better construction, although at this point of the frame rail the strain on the material usually is not very great.

The rear springs at their front end are either pivoted or shackled to their brackets. Two designs of brackets for this part of the car are illustrated in Fig. 334. The one shown at *A* is a plain fork and is secured to the frame by three rivets, one of which passes through the lower flange. The design shown at *B* is of the shrouded type, which gives a somewhat neater appearance if the front end of the rear spring is exposed to view.

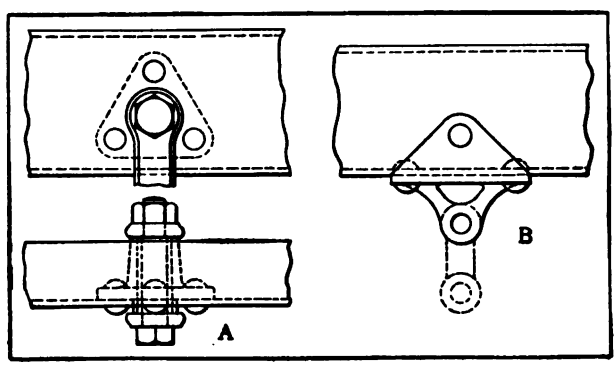

FIG. 333.—FRONT SPRING REAR BRACKETS.

Generally, however, it is covered with a shield, and an open type of bracket is used.

The bracket for the rear spring front end is sometimes combined with a bearing for the brake shaft and also with a bracket for the forward end of the radius rod. For instance, the bracket may be made with a hollow stud surrounded by the hub part of a shackle forging, and the brake shaft extend through the hollow stud.

If semi-elliptic springs are used at the rear the frame rail may be curved downwardly, the same as in front, and provided

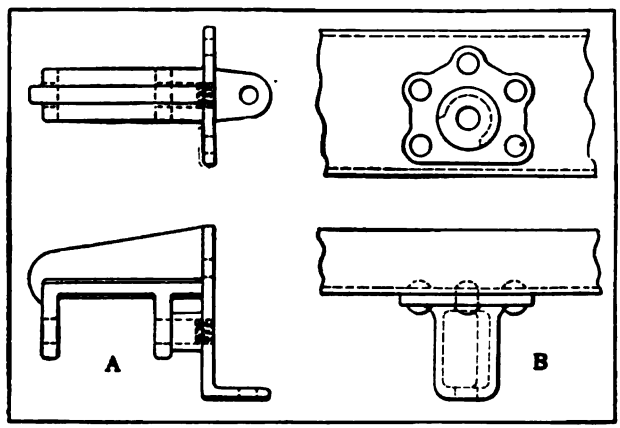

FIG. 334.—REAR SPRING FRONT BRACKETS.

with a bracket similar to that shown in Fig. 332. A bar is then run through the eyes of the bracket on opposite sides of the frame, whose ends, somewhat reduced in diameter, serve as the spring shackle bolts. This practice is more or less prevalent in Europe. An alternate construction consists in the use of long spring brackets of the general form shown in Fig. 335 at *A*. Brackets of this type are riveted to the bottom flanges of the side rail and rear cross member and also to the web of the latter.

The short members of three-quarter elliptic springs may be secured by bolts or clips to brackets riveted to the side rails near their rear ends, or may be clamped between extensions of the flanges of the rear cross member, as illustrated in Fig. 335 at *B*. In the design shown the spring plate has three holes drilled through it, the forward one of which is for the usual spring

centre bolt, which holds the leaves together, and the outer two of which are for clamp bolts. Five bolts are used by some designers. At *C* in Fig. 335 is shown a bracket for the cross member of platform springs which is riveted to the rear cross member

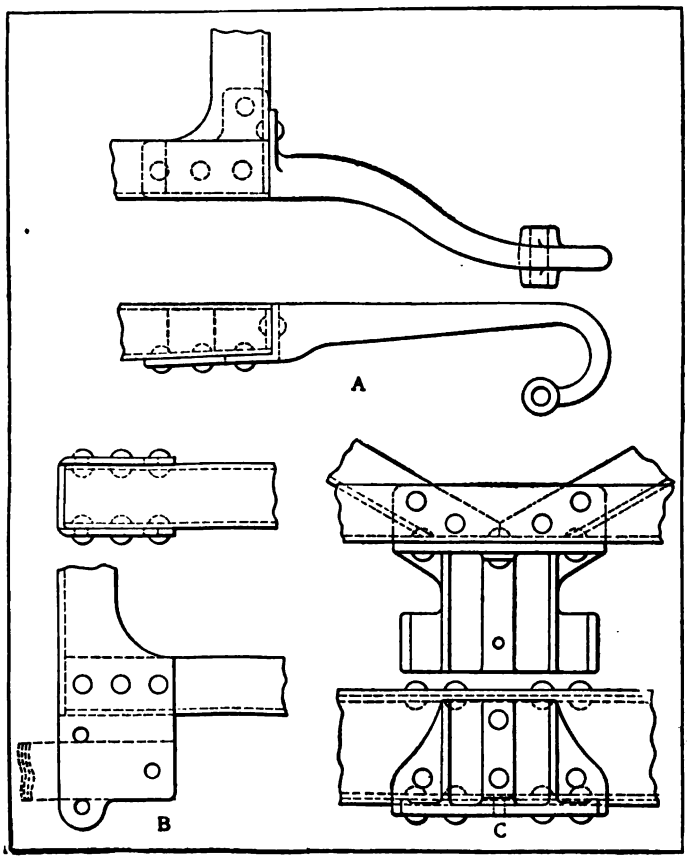

FIG. 335.—REAR SPRING REAR BRACKETS.

of the frame. In order to prevent twisting of this frame member it is well to run diagonal braces from the side rails to the middle of the rear cross members, as shown. French designers usually make this bracket of an inverted box shape, which gives it a neater form but interferes with riveting at the centre of

the base. Sometimes this bracket is of considerably greater length than here illustrated, while one designer dispenses with it by giving the frame rear cross member a rearward curve at the middle and clips the spring to it directly.

Spring brackets for motor trucks differ from those for pleasure cars on account of the difference in frame construction and because neat appearance is not such an important factor. Fig. 336 illustrates two designs of truck spring brackets. That shown at *A* is a front bracket and is riveted to the front corner of the frame. However, the tendency in American design is to have the frame overhang the springs in front, so the bracket comes

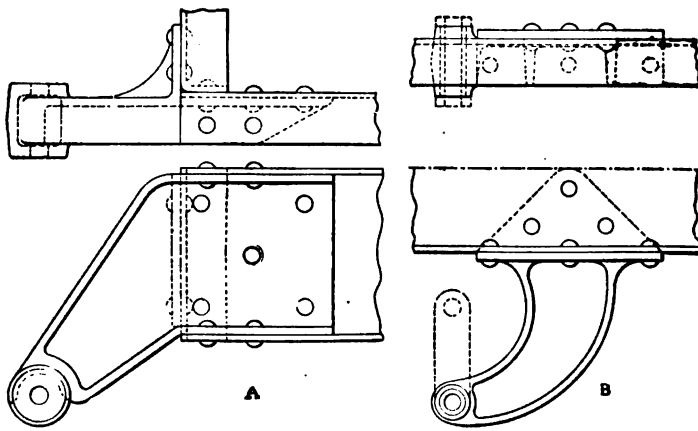

FIG. 336.—MOTOR TRUCK SPRING BRACKETS.

underneath the frame. A bracket of the type shown at *B* is used at the rear end of the front springs and also at the shackled end or ends of the rear springs.

Radiator Brackets.—Radiators may be secured either to the front cross member or to the side rails. Owing to their relatively frail construction it is desirable that they be so supported that distortion of the frame will not strain them seriously. The simplest arrangement consists in securing brackets to the sides of the radiator which are bolted down to the top flange of the side rails (*A*, Fig. 337). This, of course, does not protect the radiator against frame distortion. A better plan consists in providing the radiator with trunnions which are supported in bearings secured to the frame rail (*B*, Fig. 337). The top then is

braced or steadied by the water return pipe to the top of the engine and sometimes by a rod connecting to the dashboard. Still greater protection against frame distortion can be secured by slipping bushings with spherical seats over the trunnions.

In the case of commercial vehicles special precautions have to be taken in designing the support for the radiator. It must be protected from both road vibration and strains due to distortion of the frame. The radiator is insulated against road vibration by supporting it from the frame through the intermediary of springs, coiled compression springs being generally employed and flat springs in some instances. Strains due to distortion of the frame are guarded against by flexibly supporting the radiator at three points. It is carried upon springs on opposite sides, and either

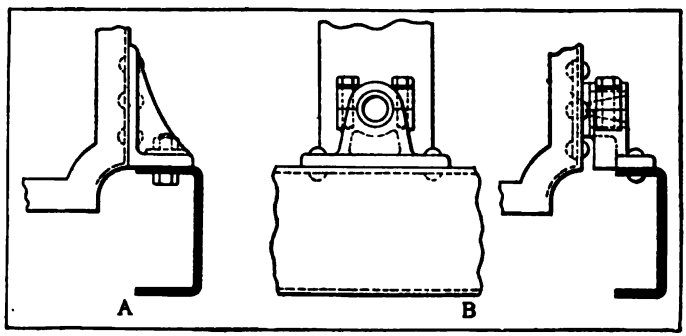

FIG. 337.—RADIATOR BRACKETS.

the top or the bottom is braced by a rod to some part of the frame or body. Sometimes this brace is also spring cushioned. Fig. 338 illustrates the Dayton truck radiator support which protects the radiator against both frame distortion and road vibration, the radiator being hung on coiled springs by brackets secured to the front of the engine housing.

Fig. 339 illustrates a bracket used for flexibly supporting the gear box, engine or unit power plant at three points. It is secured to a frame member by three bolts and is provided with a forked connection which joins by a pivot bolt to a lug on the part to be supported. This arrangement affords a universal support, which protects the supported part against any distortion of the frame.

Truck Bumpers—Motor truck frames generally are provided with a bumper in front which will receive the shock of a collision

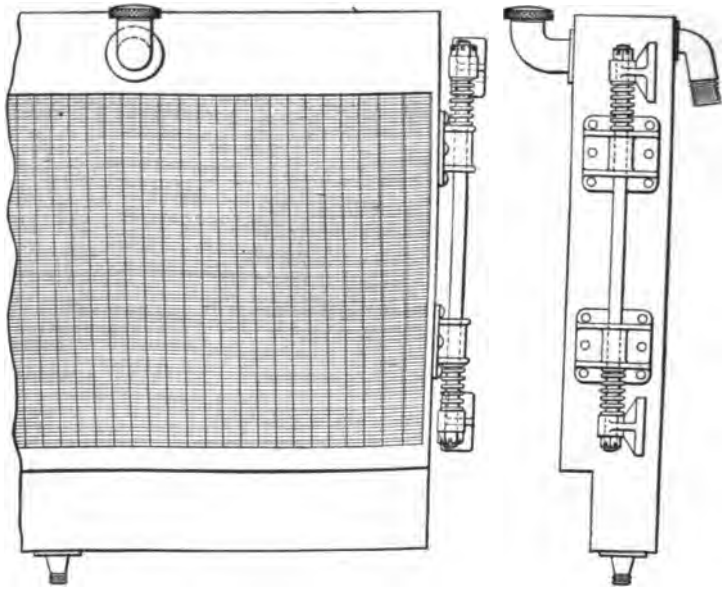

FIG. 338.—TRUCK RADIATOR SUPPORT.

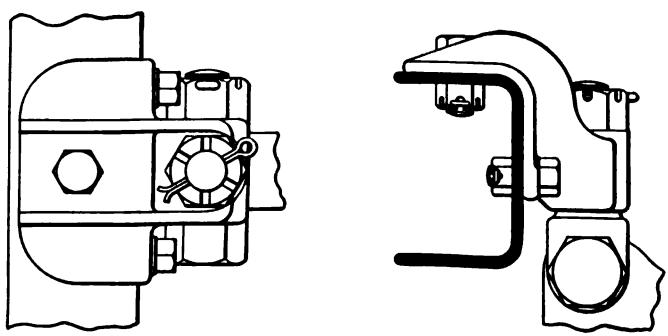

Top View. Side View.

FIG. 339.—UNIVERSAL BRACKET FOR THREE POINT SUSPENSION.

and transfer it directly to the frame, thus protecting frail parts at the front of the car, such as lamps, radiator, etc. These bumpers are made in many different forms. One manufacturer bends the frame side rails inward in a curve so they meet at the middle of the car where they are joined together by a plate riveted to them. Another uses a sort of arch formed of angle iron which is riveted to the side frame rails. In Fig. 340 is shown a tubular bumper carried by brackets extending forward from the frame

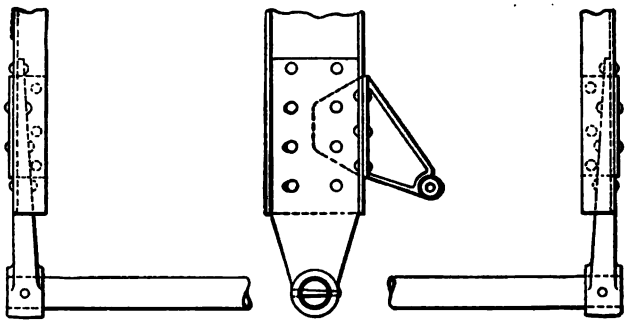

FIG. 340.—TRUCK BUMPER.

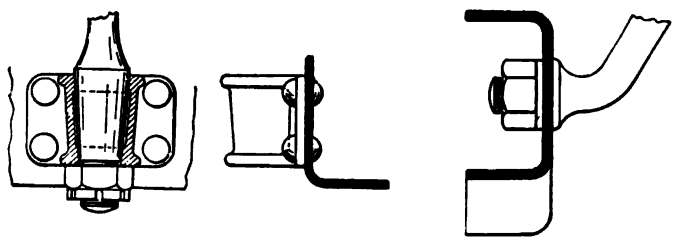

FIG. 341.—FENDER BRACKETS.

side rails. It is desirable that no part of the truck project ahead of the bumper, and for this reason the engine starting crank is often hinged so it can be swung out of the way.

The brackets supporting the front fenders should preferably be secured to the frame in such a manner that the fenders can be quickly removed, for the reason that the latter generally interfere considerably with any important work on the engine. A method of securing the brackets which insures this quick removal is illustrated in Fig. 341. A small bracket is reamed with a taper hole to receive the fender hanger. It is apparent that

with a bracket of this kind the fender can be quickly taken off. The same type of bracket may be used for the searchlight, and, in an inverted position for the running board hangers. Rear fender brackets are generally riveted to the frame, but can be made detachable at very little extra expense. The design for such a detachable bracket is also shown in Fig. 341. Fender irons often are bolted to lugs formed on radiator or spring brackets.

Fig. 315 illustrates a design of step or running board hanger of which it is customary to use three on each side in pleasure cars and two in trucks. This hanger is made of pressed steel and has a channel section which varies with the load. The one

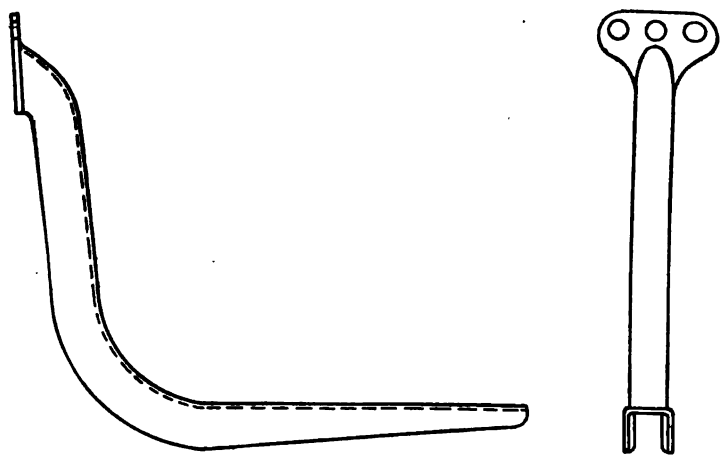

FIG. 342.—STEP HANGER.

here shown is secured to the frame by three rivets all in a line. Another plan consists in making the base flaps of substantially rectangular section and using four rivets.

Starting Crank Bracket—In many cars the bracket for the engine starting crank is secured to the frame front cross member, as illustrated in Fig. 343. Instead of the hub of the bracket being on the under side of the cross member it may be so located that the shank of the starting crank has to pass through a hole

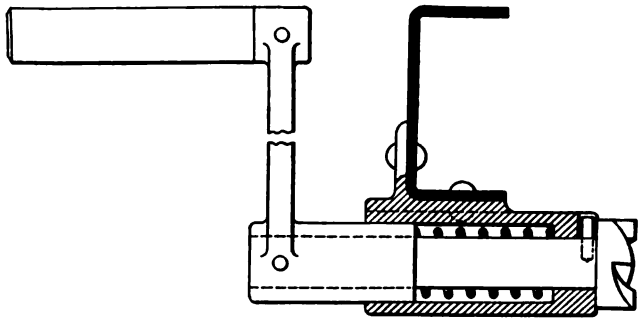

FIG. 343.—STARTING CRANK BRACKET.

in the cross member, the bracket being riveted to the web of the channel either in front or in the back. The crank and bracket show provisions made for automatically holding the former in the upright position when disengaged.

Lamp Brackets—Of the different lamps carried on an automobile the head and tail lights are usually supported by brackets secured to the frame. Fig. 344 shows two designs of head light brackets and one tail light bracket. At *A* is shown a drop forged bracket which fits with a taper joint into a bracket riveted

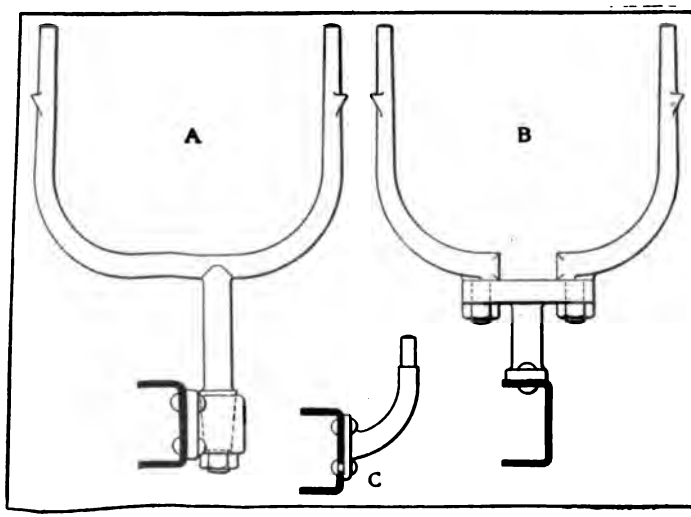

FIG. 344.—LAMP BRACKETS.

to the frame side rail. One designer places the frame bracket inside the channel, passing the shank of the lamp bracket through a hole in the top flange, which makes for neat appearance. In the headlight bracket design shown at *B* the prongs are bolted to the shank, which makes the distance between prongs adjustable. Headlamp brackets have been standardized by the Society of Automobile Engineers. Three standard sizes are recommended for the forked type of head-lamp support, the forks having centre-to-centre widths of 7¼, 8¼ and 9¼ in. The upper ends of the supports are to be ½ in. diameter, with ½ in. S. A. E. threads and machined shoulders not less than ¾ in. diameter. The distance from the upper face of the shoulder to the last full thread on the end of the support should not be less than 1½ in. where no tie-rod is used, or 1½ in. plus thickness of rod where a rod is used. The use of nuts and lock washers for locking the lamp to the fork is standard practice.

An adjustment should be provided for the support to allow a change of the vertical angle of the lamp without bending any part of the support. The lugs attached to the lamp shells should have bores of 17/32 in., the bores being 1½ in. long. The center-
f the hole in the lug should be not less than 9/16 in. from
arest point of the shell. The clearance between the lower
f the bracket and the lamp should not be less than 9/16 in.

CHAPTER XVIII.

SPRINGS.

Automobile frames are supported on the axles through the intermediary of steel springs. Leaf springs, built up of a number of leaves or plates of different lengths, are used almost exclusively, though coiled springs have been used on low priced cars.

Classification of Springs—The simplest form of automobile spring is the half elliptic spring illustrated in Fig. 345 at *A*. It is made up of one master leaf whose ends are formed into an eye for connection to the spring brackets or shackles, and a number of shorter leaves, the lengths of the leaves decreasing uniformly with their distance from the master leaf, except that in springs for heavy loads the leaf or leaves nearest the master leaf sometimes extend to the ends of the latter and even enwrap the spring eyes. The various leaves of a spring are held together by a centre bolt.

All other types of springs are made up wholly or in part of half elliptic springs. At *B*, Fig. 345, is shown the three-quarter elliptic spring, which consists of a quarter elliptic top member and a half elliptic bottom member, the two members being joined by a bolt at one end. At *C* is shown the elliptic spring, consisting of half elliptic top and bottom members which are joined by bolts at both ends. *D* shows the three-quarter scroll elliptic, consisting of a quarter elliptic scroll top member and a half elliptic bottom member, joined by shackles at one end. *E* shows the scroll elliptic (one end) spring, consisting of a half elliptic top member with a scroll at one end and a half elliptic bottom member, joined at one end by a bolt and at the other by shackles. The spring shown at *F* is known as the scroll elliptic (both ends); it consists of a half elliptic top member with scrolls at both ends and a half elliptic bottom member, the two being joined by shackles at both ends. At *G*, Fig. 346, is shown a platform spring (three point suspension), which consists of two half elliptic side members and one half elliptic cross member, the side members being

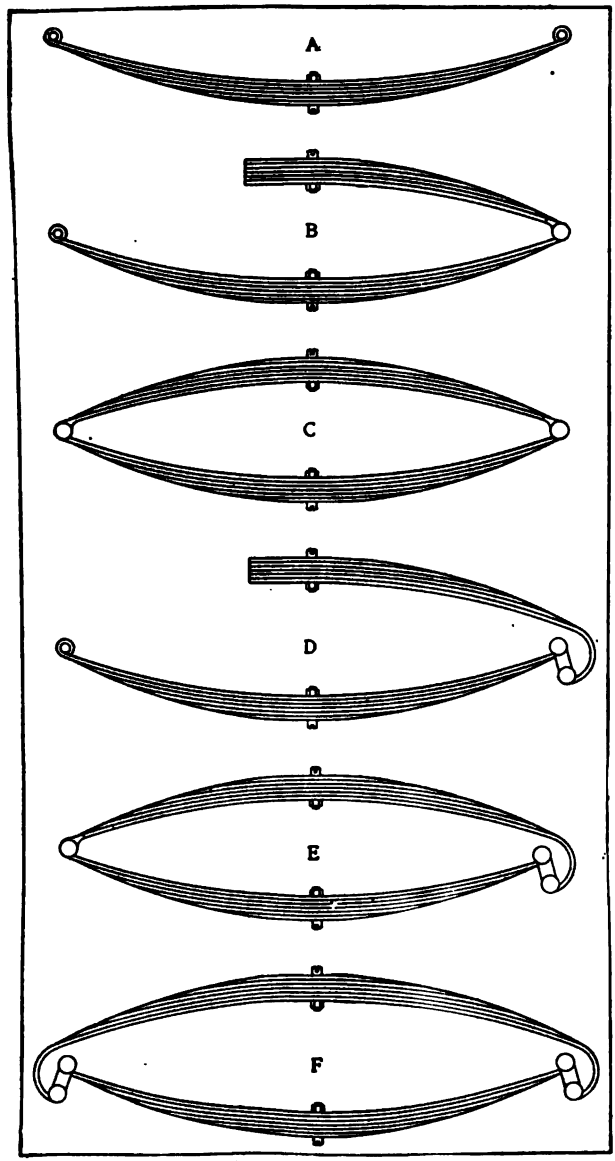

FIG. 345.—BODY SPRING TYPES.

joined to the cross member by shackles. At *H* is shown a three-quarter elliptic platform spring consisting of two three-quarter elliptic side members and one half-elliptic cross member, the side members being joined to the cross members by shackles. *I* shows an auxiliary spring consisting of a half elliptic spring with plain ends.

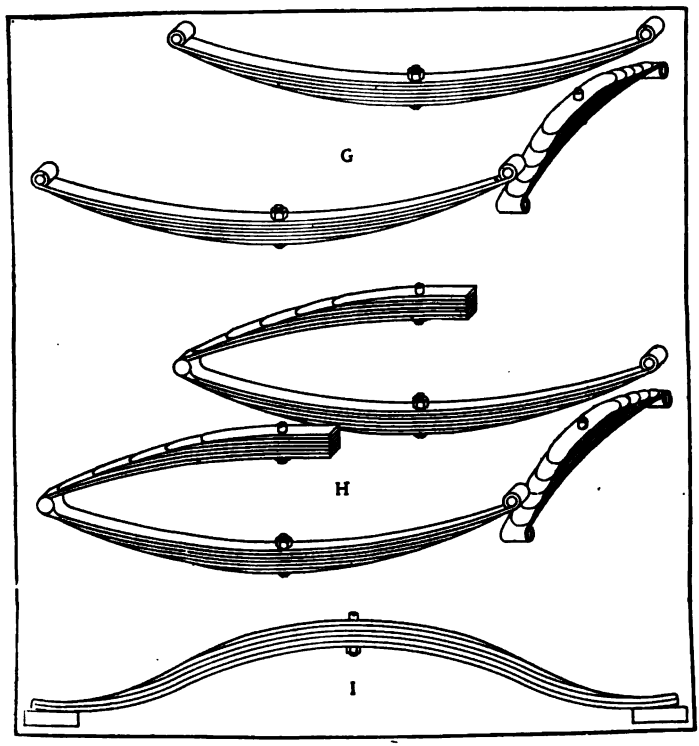

FIG. 346.—BODY SPRING TYPES.

In Fig. 347 is shown a half elliptic cantilever or floating cantilever type of spring. This is mainly used for rear suspension of pleasure cars. It is a half elliptic spring which swivels on the car frame at its middle, is shackled to the frame at the forward end and connects to the axle at its rear end. Quarter elliptic springs, which are also classed as cantilever springs, are used for both front and rear suspension on light cars. The heavy end of these is secured to the frame and the light end to the axle.

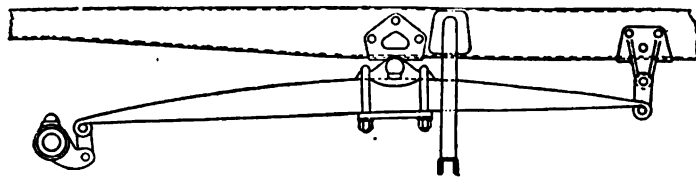

FIG. 347.—GRANT CANTILEVER SPRING.

Spring Material.—The common spring material which has long been used for carriage and railway springs is a carbon steel containing about 1 per cent. of carbon. The S. A. E. specifications for this carbon spring steel are as follows:

0.95 CARBON STEEL.

Carbon	0.90 to 1.05% (0.95% desired)
Manganese	0.25 to 0.50% (0.35% desired)
Silicon	0.10 to 0.30%
Phosphorus, not over	0.035%
Sulphur, not over	0.035%

The natural sources of the above steel are the basic open hearth, crucible and electric furnace. This grade of spring steel is suited for the most important springs, as with proper heat treatment it will give very good results. The heat treatment of the spring plates after they are worked to shape consists in quenching in oil at a temperature of about 1,400 degrees Fahr., reheating to about 500 degrees Fahr. and cooling slowly. The temperatures are given for purposes of illustration only. The physical qualities of the completed spring will greatly depend upon them, and the best quenching and reheating temperatures are usually worked out by experiment in each shop.

The carbon steel above specified when tempered will have the following physical properties, according to the heat treatment:

Tensile strength	120,000 to 180,000 lbs. per sq. in.
Elastic limit	70,000 to 95,000 lbs. per sq. in.
Elongation in 2 inches	9 to 10%
Reduction of area	14 to 16%

Besides carbon steel, chrome-nickel steel, chrome-vanadium steel and silico manganese steel are used in the manufacture of springs. The S. A. E. specifications of silico manganese spring steel are as follows:

SILICO-MANGANESE STEEL.

Carbon	0.45 to 0.55%	(0.50% desired)
Manganese	0.60 to 0.80%	(0.70% desired)
Silicon	1.90 to 2.20%	(2% desired)
Phosphorus, not over	0.04%	
Sulphur, not over	0.04%	

The following heat treatment will probably give good results: Heat to 1,600-1,750 degrees Fahr., quench, reheat to about 800 degrees Fahr. and cool slowly. The best reheating temperature should be carefully determined by experiment. The elastic limit will be about 150,000 pounds per square inch.

Krupp's silico manganese spring steel is claimed to have the following physical properties when spring tempered:

Tensile strength	250,000 to 255,000 lbs. per sq. in.
Elastic limit	206,000 lbs. per sq. in.
Elongation	3.5%

Chrome nickel and chrome vanadium steels vary in composition and different heat treatments result in different physical

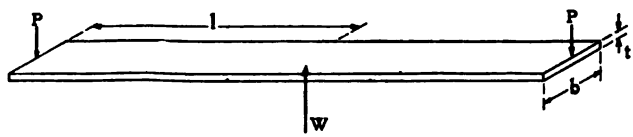

FIG. 348.

qualities, but either steel properly spring tempered should have an elastic limit upward of 150,000 pounds per square inch.

Theory of Leaf Springs—The simplest form of leaf spring is that containing only a single leaf. Such a spring may be considered either as two cantilever beams loaded at their ends or as a simple beam loaded at the middle. Fig. 348 represents such a spring in diagram. If we consider each half of the spring as a cantilever and denote the load on one end of the spring by P, the half length of the spring by l, the width by b, the thickness by t and the coefficient of elasticity by E, we have for the deflection of the end of the spring

$$d = \frac{1}{3}\frac{Pl^3}{EI} = \frac{4}{E}\frac{Pl^3}{bt^3}$$

(See cantilever beams in any textbook on mechanics.) The bending moment at any distance x from the end of the spring is Px and the stress in the material at that point is

$$\frac{6Px}{bd^2}$$

Hence, with a single leaf of uniform section over its whole length the stress due to the bending moment varies from nothing at the end to a maximum at the middle of the spring. Therefore, if a single uniform section leaf were used the material would be very poorly utilized, and one of the objects in using a multiple leaf spring is to make the stress substantially uniform in all parts of the spring. Now suppose we took a number of equal leaves and assembled them as shown in Fig. 349. Then, if loads were applied to the top leaf, all of the leaves would be deflected the same amount. If there are n leaves the deflection would be the same as in the case of a single leaf subjected to a load $\frac{P}{n}$. Therefore the deflection of a spring like that shown in Fig. 321 should be

$$d = \frac{4 P l^3}{E n b t^3}$$

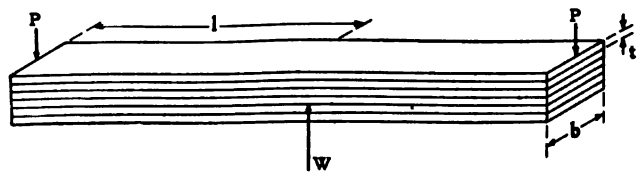

FIG. 349.

However, in a multiple leaf spring there can be no deflection without one leaf sliding over another, which introduces the factor of friction. As a leaf of the spring deflects there are two forces at work, viz., the force due to the load P carried, and the force due to the internal strains. The former force is constant, but the latter increase from nothing at the moment the deflection begins to the value of the former when it attains its maximum (in a single leaf spring). In a multiple leaf spring the friction between leaves is opposed to the deflection and, therefore, assists the internal forces or those due to the strains in the material. While the spring is deflecting the difference between the force due to the load on the spring and that due to the internal strain is available for overcoming the frictional resistance, and it is obvious that when this difference becomes equal to the frictional force the deflection ceases. Hence the deflection will be reduced and an allowance must be made for leaf friction. This reduction varies with the number of leaves, but the allowance may be placed at 15 per cent. for practical cases.

In an actual vehicle spring the leaves are of gradually decreasing lengths, and since the outer end of any leaf is not supported by leaves below it, the deflection will be greater than in a spring of the form shown in Fig. 349. Reuleaux has calculated that if the lengths of springs decrease uniformly, as in Fig. 350, the multiplying factor will be 1.5. That is, a spring of the type shown in Fig. 350 will deflect 50 per cent. more for a given load than a spring of the type shown in Fig. 349, both being of the same dimensions. However, in automobile springs the second leaf often extends out as far as the centre of the spring eye, and in heavy motor truck springs even two or three leaves support the main leaf at the eyes, in which case the multiplying factor is smaller. From the value of this factor for the extreme cases, Figs. 349 and 350, viz., 1 and 1.5, its value for any intermediate case can be closely approximated. For commercial springs it probably never drops below 1.25. Hence, taking 1.25 and 1.5 as

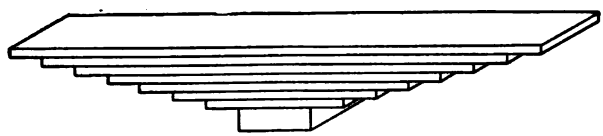

FIG. 350.

the extreme values of this factor in actual practice, and taking into account the effects of both shortening of the leaves and of friction between them, we have for the deflection of vehicle leaf springs

$$d = \frac{(1.25 \text{ to } 1.5)\ (1 - 0.15)\ 4 P l^3}{E n b t^3}$$

which may be simplified to read

$$d = \frac{(4.25 \text{ to } 5.1) P l^3}{E n b t^3} \qquad (76)$$

The larger coefficient is to be used when the length of any leaf is less than that of the preceding one by $\frac{l}{n}$; the smaller if several of the longer leaves are substantially equal in effective length.

Equation (76) covers the case of a spring with leaves of equal thickness. If the thickness t differs we may substitute for $n t^3$ in the denominator, $t_1^3 + t_2^3 + t_3^3 \ldots\ldots\ldots\ldots t_n^3$, *or* Σt^3, which gives

$$d = \frac{4.25 \text{ to } 5.1 P l^3}{E b \Sigma t^3} \qquad (77)$$

The bending moment at the middle of the spring is equal to $P\,l$. In a spring having n leaves of equal thickness t, this bending moment is equally divided and that on each leaf is $\frac{P\,l}{n}$. Since the section modulus of the leaf is $\frac{b\,t^2}{6}$, the unit stress is

$$S = \frac{\frac{P\,l}{n}}{\frac{b\,t^2}{6}} = \frac{6\,P\,l}{n\,b\,t^2}$$

If we divide the elastic limit of the material by this stress we obtain the factor of safety, which in well designed springs is usually between 2.5 and 2.75. Therefore, calling the elastic limit of the spring material L, the maximum safe load on the spring with a safety factor of 2.5,

$$W = \frac{L\,n\,b\,t^2}{7{\cdot}5\,l} \qquad \ldots\ldots(78)$$

In case the leaves are of unequal thickness we can calculate the strain in each from the fact that the elastic curves of all leaves at the middle must be alike. Under these conditions the moment coming on each leaf is proportional to its moment of inertia. The bending moment on the heaviest leaf (of moment of inertia I) then will be

$$M_1 = \frac{P\,l\,I_1}{\Sigma\,I} = \frac{P\,l\,t_1^3}{\Sigma\,t^3},$$

and the unit stress in this leaf will be

$$S = \frac{\frac{P\,l\,t_1^3}{\Sigma\,t^3}}{\frac{b\,t_1^2}{6}} = \frac{6\,P\,l\,t_1}{b\,\Sigma\,t^3} \qquad \ldots\ldots(79)$$

In the design of the springs the designer has to deal with a considerable number of variable factors, viz., the length, width, thickness and number of leaves, and the elastic limit of the material. Of these the first two are generally determined by empirical rules based upon experience. Longer springs make for an easier riding car, because with a greater length a greater deflection can be obtained for a given change in load without increasing the stress in the material. Thus, the stress will remain the same if

$$l \sim t^2$$

and under these conditions

$$\frac{l^2}{t} \sim l^{1{\cdot}5}$$

The usual lengths of different kinds of front and rear springs in pleasure cars are given in the following table taken from a book on Leaf Springs, compiled by David Landau, and published by the Sheldon Spring and Axle Co. The loads referred to in the table are those which the springs will carry when the car is loaded with its rated number of passengers, and the lengths are those which the springs will have when so loaded.

TABLE XI—PLEASURE CAR SPRINGS.

FRONT SPRING, SEMI-ELLIPTIC.

Load on One Spring, Pounds.	Length, Inches.	Width, Inches.
350 to 400	33 to 34	1½
400 to 500	35 to 36	1¾
500 to 550	36 to 37½	1¾
600 to 800	37½ to 40	2
800 to 1,100	40 to 42	2¼

REAR HALF ELLIPTIC SPRINGS.

Load on One Spring, Pounds.	Length, Inches.	Width, Inches.
450 to 550	46 to 48	1¾
550 to 650	49 to 50	2
700 to 850	51 to 52	2
900 to 1,000	52 to 55	2¼
1,000 to 1,350	55 to 57	2¼
1,350 to 1,550	57 to 60	2¼ to 2½

REAR SPRINGS, THREE-QUARTER ELLIPTIC.

Load on One Spring, Pounds.	Semi-Elliptic Element, Inches.	Length of Scroll (Link to Bolt), Inches.	Width, Inches.
450 to 500	45 to 47	18 to 19	1½
500 to 650	47 to 49	18 to 19	1¾
650 to 775	47½ to 51½	19½ to 22	2
775 to 900	51½ to 52	22½ to 23	2 to 2¼
900 to 1,000	52½ to 53½	23 to 24	2 to 2¼
1,000 to 1,150	53½ to 54	24 to 25	2 to 2¼
1,150 to 1,250	54 to 54½	25 to 25½	2 to 2¼
1,250 to 1,350	54½ to 55	25½ to 26	2 to 2¼
1,350 to 1,450	55 to 56	26 to 26½	2¼ to 2½
1,450 to 1,550	56 to 58	26½ to 27	2¼ to 2½
1,550 to 1,650	58 to 60	27 to 27½	2¼ to 2½

FULL ELLIPTIC SPRINGS.

Load on One Spring, Pounds.	Length, Inches.	Width, Inches.
500 to 700	35	1¾
800	36	2
1,000	37	2¼
1,100	39	2¼
1,200	41	2¼
1 300	43	2¼
1,400	44	2½
1,500	45	2½
1,600	46	2½

THREE-QUARTER PLATFORM SPRINGS.

Load on One Side Spring, Pounds.	Length of Side Spring, Inches.	Length of Cross Spring, Inches.	Width, Inches.
500 to 550	45 to 47	39½	1¾
600 to 700	47 to 49	39½	1¾
900	51 to 53	39½ to 40	2 to 2¼
1,000	53 to 55	39½ to 40	2¼
1,100	55 to 57	39½ to 40	2¼
1,200	57	40	2¼
1,300	57½	40	2¼
1,400	58	40	2¼
1,500	58½	40	2¼

The author has compiled the following figures on the average lengths and widths of springs used on motor trucks:

TABLE XII—MOTOR TRUCK SPRINGS.

FRONT SPRINGS, HALF ELLIPTIC.

Load Capacity, Tons.	Length, Inches.	Width, Inches.
¾	38 to 40	2
1	38 to 40	2¼
1½	40 to 42	2½
2	42 to 44	2½
3	44 to 46	2½ to 3
4	46 to 48	3
5	48 to 50	3

REAR SPRINGS, HALF ELLIPTIC.

Load Capacity, Tons.	Length, Inches.	Width, Inches.
¾	48 to 52	2
1	48 to 52	2¼
1½	50 to 53	2½
2	50 to 53	2½
3	52 to 54	3
4	52 to 55	3
5	54 to 56	3½

PLATFORM SPRINGS, SIDE MEMBERS.

Load Capacity, Tons.	Length, Inches.	Width, Inches.
¾	44 to 48	2
1	44 to 48	2¼
1½	46 to 48	2¼
2	46 to 49	2½
3	48 to 50	3
4	48 to 51	3
5	50 to	3½

Width and Thickness of Leaves.—It has long been customary to make spring plates according to the Birmingham or Stubb's

gauge, and the following table gives the sizes employed, together with the cubes of the thickness, for convenience in calculating deflections and maximum safe loads:

No.	Thickness (Inch).	t^3
00	0.380	0.0549
0	0.340	0.0393
1	0.300	0.0270
2	0.284	0.0229
3	0.259	0.0174
4	0.238	0.0135
5	0.220	0.0106
6	0.203	0.0084

Owing to the non-uniform variations in thickness in the Stubb's gauge some manufacturers are having plates rolled varying in thirty-seconds of an inch.

Thickness (Inch).	t^3
0.375	0.0527
0.344	0.0407
0.312	0.0304
0.281	0.0222
0.250	0.0156
0.219	0.0105
0.187	0.0065

Spring plates are made in the following standard widths: For pleasure cars: 1½, 1¾, 2, 2¼ and 2½ inches. For commercial: 2, 2¼, 2½, 3, 3½, 4 and 4½ inches.

Flexibility—The flexibility is a most important quality, as an insufficiently flexible spring makes the car hard riding, while a spring too flexible will cause the chassis frame to strike the axles and is liable to break. Spring makers rate or gauge springs by the load required to deflect them one inch. From the automobile designer's standpoint the most important factor is the deflection caused by the maximum dead load the springs will have to bear. This total deflection should increase with the length of the spring, because, on the one hand, long springs are used on high powered, luxurious vehicles which are naturally expected to be easier riding than small cars, and, on the other hand, a greater deflection can be obtained with the larger springs without increasing the stress in the material. Since the length, width, etc., of the springs are empirically chosen, it is obvious that there can be no rational relation between the length of the springs and their deflection under their maximum dead load, but data on hand shows that in practice the two factors mentioned vary substantially in direct proportion.

The deflection should also increase somewhat with the elastic limit of the material. Of course, if we make two springs of exactly the same dimensions, the one of ordinary carbon spring steel and the other of alloy spring steel, they will deflect equally under equal loads, because both steels have substantially the same coefficient of elasticity. But that is not the proper way to use alloy steel. Wherever alloy steel is substituted for carbon steel—except in cases where the original design proved far too weak—the weight of the part is reduced. Therefore, with alloy steel in place of carbon steel we would use thinner leaves, which would deflect more. The higher elastic limit of the alloy steel enables it to withstand this higher deflection. Viewing the subject from another standpoint, if it were not possible to secure better riding qualities there would be little object in using alloy steels for springs. A spring can be made adequately strong of carbon steel, but designed mainly with a view to strength, such a spring is apt to be rather hard riding.

As spring steel is a rather expensive material the weight of steel required for the springs is an important item. It will be shown further on that for a given deflection and a given stress in the steel the same weight of steel is required whatever the type of spring used. However, the more complicated types, like three-quarter and full elliptic, are more likely to be used when large deflections are wanted, and vice versa, the simplest type, the quarter elliptic, is most likely to be selected when it is desired to keep down the cost of the springs.

The following table shows the deflection ranges with the different types of springs.

TABLE XIII. RANGE OF DEFLECTION UNDER DEAD LOAD

Half Elliptic front	1¼—2	inches
Half Elliptic rear	3½—5½	inches
Three Quarter Elliptic rear	4 —6½	inches
	4¼—6½	inches
Truck Half Elliptic front	2¼—3¼	inches
Truck Half Elliptic rear	2¾—3¾	inches
Truck platform	3¼—4¾	inches

It will be seen that the half elliptic front springs of pleasure cars deflect less than half as much as rear springs of the same type. One reason for thus limiting the play of the front springs is the desire to minimize its effect on steering. Another is that it permits of lowering the frame, since not so much clearance between frame and axle is required. As regards the various types of rear springs, it is obvious that the greater the relative length of the spring the greater the deflection under full load can be made; that is, a three quarter elliptic or platform spring will deflect more than a half elliptic, and an elliptic spring most of all.

As far as pleasure car rear springs are concerned, the initial deflection under load to be allowed for is chiefly a commercial question. The greater the initial deflection—load and quality of spring steel being the same—the greater the weight of the springs required, and the higher their cost. The greater deflections given in the tabulation are therefore found on the higher priced cars.

Eccentrated Springs—The formulæ for deflection and maximum safe load developed in the foregoing apply directly only to half elliptic springs. It is obvious that the deflection of an elliptic spring under a given load is twice that of one of its half elliptic members under the same load. In three quarter elliptic and platform springs the case is slightly more complicated. If the axle were secured to the middle of the length of the half elliptic or side member, the ends of the spring would deflect unequally, which would cause the axle housing to constantly rock around its axis under the play of the springs, or the spring saddle to rock

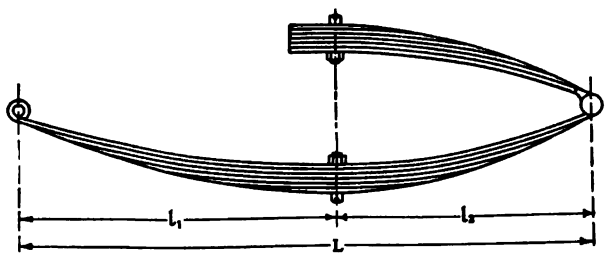

FIG. 351.—ECCENTRATED THREE-QUARTER ELLIPTIC SPRING.

on the axle housing, both of which are objectionable. In the above case there are two quarter elliptic springs in series on one side of the axle, while there is only a single quarter elliptic on the other side, and the combined deflection of the two quarter elliptics would be twice that of the single elliptic. In order to overcome this defect, the half elliptic or side spring is usually "eccentrated;" that is, the centre of its support on the axle is at unequal distances from the spring eyes. That end of the half elliptic or side member which is shackled to the frame must be so much longer than the other end that under a given load it will deflect as much as the other two quarter elliptics together. The proper amount of eccentration can easily be calculated for a three quarter elliptic, provided the two rear quarter elliptics are of equal length. Since the width, thickness and number of leaves of each of the three-quarter elliptics in Fig. 351 are the same we have by equation (76).

$$l = c\,l_1^3 = 2\,c\,l_2^3$$

$$l_1^3 = 2\,l_2^3$$

$$l_1 = \sqrt[3]{2}\,l_2 = 1.26\,l_2$$

For practical purposes a coefficient of 1.25 would be sufficiently close, which makes the two lengths as 4 to 5. If the springs are thus arranged the deflection can be calculated by assuming that the longer end of the half elliptic member carries one-half the total load and calculating its deflection under this load, which will be equal to the deflection of the whole spring. In a platform spring the length of the cross member is independent of that of the side member. In order to find the proper eccentration for the side member of a platform spring proceed as follows: Assume one-quarter of the total load on the rear springs to be supported by one-half of the cross member, and by means of equation (76) calculate its deflection. Denote this by d_3. Now, denoting the deflection of the long end of the side member by d_1 and that of the short end by d_2, we have

$$d_1 = d_2 + d_3$$

According to equation (76).

$$\frac{5.1\ P\ l_1^3}{E\ n\ b\ t^3} = \frac{5.1\ P\ l_2^3}{E\ n\ b\ t^3} + d_3$$

$$l_1^3 - l_2^3 = \frac{E\ n\ b\ t^3\ d_3}{5.1\ P}$$

We also have $$l_1 + l_2 = L$$

These two simultaneous equations can readily be solved after the arithmetic values are inserted in the right hand terms.

Front half elliptic springs also are sometimes eccentrated, the object being to increase the wheelbase without increasing the length of the car.

Number and Thickness of Plates—The deflection of a cantilever loaded at the end is given by the equation

$$d = \frac{W l^3}{2\,E\,I}$$

and the maximum stress in the material of such a lever is

$$S = \frac{W l c}{I} = \frac{W l t}{2\,I}$$

Hence

$$S = d \times \frac{3\,t\,E}{2\,l^2}$$

and

$$t = \frac{2\,S\,l^2}{3\,d\,E}$$

Placing the coefficient of elasticity E at 28,000,000 this reduces to

$$t = \frac{S l^2}{42{,}000{,}000\, d} \qquad (81)$$

The gauge thickness closest to the result obtained should then be chosen, and if the result should come midway between the thicknesses of two gauge sizes, the length of the spring could be varied slightly and the calculation made over. After t has been determined the necessary number of leaves may be determined by a transformation of equation (76) as follows:

$$n = \frac{4.25\,(to5.1)\,P l^3}{E\, d\, b\, t^3} \qquad (82)$$

Sample Calculation—To illustrate the use of the formulæ derived in the foregoing, we will calculate the springs for a five passenger touring car in which each of the half elliptic front springs has to carry 650 pounds and each of the three quarter elliptic rear springs 850 pounds. From Table XI we find the proper size of front springs to be 38x2 inches and the proper size of the rear springs, $52 \times 2 + 23 \times 2$ inches.

We will assume that carbon spring steel, with an elastic limit of about 135,000 pounds per square inch, is to be used for the front springs, so that a stress of 50,000 pounds per square inch can be figured on. The deflection of the springs under full load would be about 1½ inches. Then, inserting values in equation (81) we find for the necessary thickness of plates.

$$t = \frac{50{,}000 \times 10^2}{42{,}000{,}000 \times 1.5} = 0.286 \text{ say } 0.284 \text{ inch}$$

Inserting values in equation (82) we get for the number of leaves required

$$n = \frac{5.1 \times 325 \times 19^3}{28{,}000{,}000 \times 1.5 \times 2 \times 0.284^3} = 5.92$$

Therefore, six leaves would be chosen. The actual deflection then would be equation (76)

$$d = \frac{5.1 \times 325 \times 19^3}{28{,}000{,}000 \times 6 \times 2 \times 0.284^3} = 1.48 \text{ inches}$$

and the actual stress

$$S = \frac{42{,}000{,}000 \times 1.48 \times 0.284}{19^2} = 48{,}900 \text{ lbs. p. sq. in.}$$

The rear springs, we will assume, are to be made of alloy spring steel, which will sustain a stress of 75,000 lbs. per

square inch. The deflection of the rear springs under load may be chosen at 5 inches. The long end of the half elliptic member will be 52 — 23 29 inches long. Inserting values in equation (81)

$$t = \frac{75{,}000 \times 29^2}{42{,}000{,}000 \times 5} = 0.300$$

Inserting in equation (82) the number of leaves figures out to

$$n = \frac{5.1 \times 425 \times 29^3}{28{,}000{,}000 \times 5 \times 2 \times 0.300^3} = 7.05$$

Therefore seven leaves would be used.

Comparison of Spring Types.—The load on each end of a half elliptic spring is generally denoted by P and the half length by l. The total load on the spring then is

$$W = 2P$$

and this is the reaction on the support, if we neglect the weight of the spring itself. Now suppose the same spring to be used as a floating cantilever. The reaction on the support is the same as before, viz., $2P$, but in this case the whole load comes on one end of the spring. The reactions at the middle and the forward end of the spring can then be easily found by taking moments (Fig. 352); they are $4P$ and $2P$ respectively. Hence, since the load

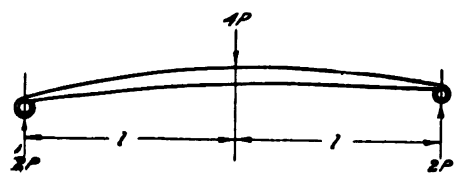

FIG. 352.

at each free end is twice as great as in the case of the half elliptic, each end will deflect twice as much with relation to the center and the stress in the spring will be twice as great.

Stress in and Deflection of Cantilever Springs.—The expression for the unit stress in a half elliptic spring is

$$S = \frac{6\,P\,l}{n\,b\,t^2} = \frac{3\,W\,l}{n\,b\,t^2}$$

and since the stress in a cantilever spring is twice as great we have for it

$$S = \frac{6\ W\ l}{n\ b\ t^2}$$

With the half elliptic spring the reduction in the opening of the spring is the same as the lowering of the frame, but this is not the case with a cantilever spring. Since the forward end is constrained to maintain the same level relative to the middle, the deflection of the forward half will result in a slight rotation of the spring around its center support and the rear half will deflect twice as much with relation to the frame as it does with relation to the middle section. Since each half of the spring deflects twice as much as a corresponding half elliptic, it is obvious that the lowering of the frame is four times as great as with a half elliptic spring. The equation for the deflection of a half elliptic spring is

$$d = \frac{(4.25\ to\ 5.1)\ P\ l^3}{E\ n\ b\ t^3} = \frac{(4.25\ to\ 5.1)\ W\ l^3}{2E\ n\ b\ t^3},$$

where W is the weight supported by the spring, and since a cantilever spring deflects four times as much under a given load as the same spring used as a half elliptic, the deflection of a cantilever spring is evidently given by the equation

$$d = \frac{(8.5\ to\ 10.2)\ W\ l^3}{E\ n\ b\ t^3}$$

It is obvious that since a certain spring gives a deflection four times as great when used as a cantilever as when used as a half elliptic the same spring could not satisfactorily be used in both ways for a certain definite spring load. For a given load the cantilever spring would have fewer and thicker leaves and be shorter than the half elliptic. We will now assume springs of the two types respectively, designed for the same load. The stresses in the material should be the same in each case, as should the deflection under load, as this latter factor determines the riding qualities. We will designate the dimensions of the cantilever spring by means of primes. The weight of a vehicle spring is closely proportional to the product of its length, width, number of leaves and thickness of leaves. It is then to be determined what is the relation of this product for the cantilever spring to that for the half elliptic spring.

Since the stresses in the material of both springs must be equal

$$\frac{3\ W\ l}{n\ b\ t^2} = \frac{6\ W\ l'}{n'\ b'\ t'^2}$$

and since the deflections are the same

$$\frac{4.25\ W\ l^3}{2E\ n\ b\ t^3} = \frac{8.5\ W\ l'^3}{E\ n'\ b'\ t'^3}$$

From this we get

$$\frac{l^3}{n\ b\ t^3} = \frac{4l'^3}{n'\ b'\ t'^3} \quad \ldots\ldots (83)$$

We may similarly simplify the equation of the expression for the stress and get

$$\frac{l}{n\ b\ t^2} = \frac{2l'}{n'\ b'\ t'^2}$$

Squaring

$$\frac{l^2}{n^2\ b^2\ t^4} = \frac{4l'^2}{n'^2\ b'^2\ t'^2} \quad \ldots\ldots (84)$$

Dividing equation (83) by equation (84) we get

$$\frac{\dfrac{l^3}{n\ b\ t^3}}{\dfrac{l^2}{n^2\ b^2\ t^4}} = \frac{\dfrac{4l'^3}{n'\ b'\ t'^3}}{\dfrac{4l'^2}{n'^2\ b'^2\ t'^4}}$$

which when reduced gives

$$n\ b\ l\ t = n'\ b'\ l'\ t'$$

Hence the weight of a cantilever spring will be the same as that of a half elliptic if the deflections under load and the stresses in the material are the same, respectively.

The same relation holds between any other classes of springs. With the same weight of spring material stressed to the same degree the deflection per 100 lbs. is the same, and consequently the riding qualities should be the same. The choice of spring types, therefore, is not so much a question of riding qualities desired as of convenience in mounting and of the use of springs for purposes other than body suspension, such as the transmission of the driving thrust from the axle to the frame and taking up the torque reaction.

Mountings of Cantilever Springs.—As originally designed the cantilever spring took neither the driving thrust nor the torque of the rear axle, a pair of links from each side of the frame to the axle serving this purpose. The rear end of the spring rested on a roller mounted underneath the axle housing. Thus the axle was securely tied to the frame, and breakage of the springs would not cause it to come adrift. Floating cantilever springs in several instances are used to take the driving thrust. In one con-

struction the rear end of the spring is secured to the spring perch by means of a pressure block of special design, as illustrated in Fig. 353, and clips. In another design a bolt is passed through the end of the master leaf and the rear flange of the spring perch, and a clip over two or more leaves and through the front flange of the perch.

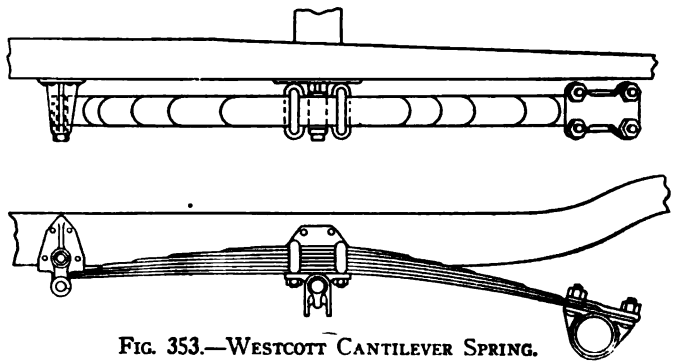

FIG. 353.—WESTCOTT CANTILEVER SPRING.

The Hotchkiss drive is also being used on commercial vehicles and in this application of necessity requires particularly rugged construction. In Fig. 354 is shown the construction of the Perfection Spring Company, which embodies what is referred to as a three point shackle. The shackles are mounted on a spindle extending from a bracket.

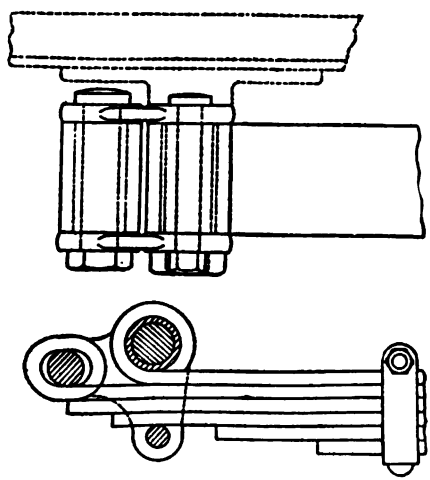

FIG. 354.—PERFECTION THREE POINT SHACKLE.

The master leaf of the spring is formed with an eye surrounding a bolt extending from this bracket. The second leaf is formed with an oblong eye through which passes a bolt carried in the shackles and another bolt carried by the shackles ties the four longest leaves together as it were.

In order that the springs may be able to protect the car frame and body from road shock, adequate clearance must be allowed between the frame and axles. This clearance should be slightly greater than the total deflection of the spring under dead load. If the clearance is thus limited the spring can never be stressed to more than a little over twice its normal stress, so that danger of breakage is almost eliminated if the elastic limit is from 2.5 to three times the normal stress. A rubber bumper is usually attached to the spring at the centre which eliminates shock if the spring closes up completely.

Centre Bolts and Centre Bands—The separate leaves of leaf springs are held together by means of a centre bolt and nut. An objectionable feature of the centre bolt is that it materially weakens the spring, and breakages through the centre bolt holes are not rare. Some spring makers have attempted to overcome this defect by using in place of the centre bolt a pair of beads formed on the spring leaf at its centre, nesting in depressions in the leaf below. While this does not hold the leaves together, it keeps them in their proper relative positions longitudinally as well as transversely. However, the use of centre bolts is well nigh universal and the S. A. E. Standards Committee on Springs has recommended the following sizes for these:

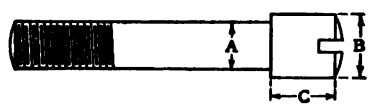

FIG. 355.—CENTRE BOLT.

Pleasure cars— Inches.	A. Inches.	B. Inches	C. Inches.
1¼ to 2	5-16	½	½
2¼ to 2½	⅜	½	½
Commercial cars—			
2	5-16	⅝	½
2¼ to 2½	⅜	⅝	½
3 to 3½	7-16	¾	½
4 to 4½	½	¾	½

The bolts are to have S. A. E. standard threads, and hexagonal nuts are usually employed. Where two beads or nibs are used

the committee recommends that they be made of ⅜ inch diameter and spaced at ¾ inch centre distances.

Heavy truck springs are held together by shrunk centre bands, as shown in Fig. 356. These are made of very soft iron and of the following dimensions (according to the Springs Division of the S. A. E. Standards Committee):

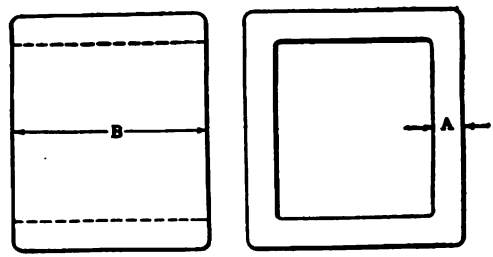

FIG. 356.—CENTRE BAND.

Load Capacity of Truck, Tons.	A, Inches.	B, Inches.
1½	⅛	2½
2	⅛	2¾
3	⅛	3
5	¼	3

Spring Arch.—Spring leaves are made from rolled stock, and after they have been cut to the right length are tapered and bent to form an arc of a circle. That is to say, the majority of springs, which are said to have a true sweep, are thus bent; truck springs are occasionally given a double sweep, the ends curving in the opposite direction to the middle portion. The difference between true sweep and double sweep springs is largely one of appearance. In a half elliptic spring the distance between a line joining the centres of the eyes and the bottom of the shortest leaf (or the top of the main leaf) is known as the arch. It is apparent that the necessary arch is dependent upon the clearance required under full dead load and on the design of the spring brackets and frame. A relatively small arch is preferable, because with it a certain increase in load will give a greater deflection. This can easily be seen by reference to Fig. 357. The bending moment at a distance l from the spring eye is equal to $P\ l\ cos\ \alpha$, and this is a maximum when $\alpha = O$, that is, when the spring is straight. However, some arch is generally necessary in order to insure the required clearance when the spring is under load. As the value of the cosine does not drop much

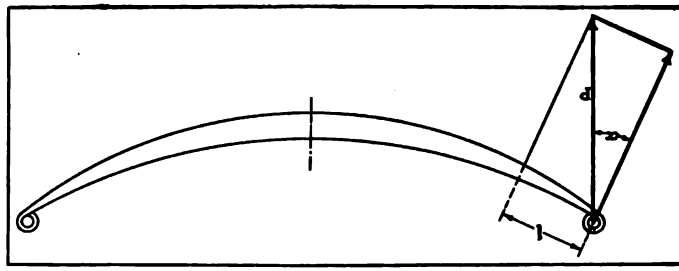

FIG. 357.—DIAGRAM SHOWING EFFECT OF ARCH ON DEFLECTION.

below unity for the first 10 degrees, this does not have much effect on the deflection. Foreign pleasure cars are sometimes provided with nearly flat springs.

Clips and Spring Perches.—Half elliptic and quarter elliptic spring members are secured to the spring seats or perches by means of box clips. These are made of very low carbon steel, which will not easily become brittle under vibration, or preferably of nickel steel. The shank is made of a diameter equal to one-quarter the spring width and is cut with an S. A. E. standard screw thread. Hexagonal head nuts are used on these clips, which can be locked by means of spring washers, check n..ts or cotter pins. Generally the ends of the shanks are slightly upset, so the nuts cannot be lost. The distance between the two clips is made as small as the design of the spring saddle permits, because that part of the spring between clips is inactive; it is generally about 1.5 times the width of the spring. A pad of some soft material has to be placed between the spring and its seat. Leather and

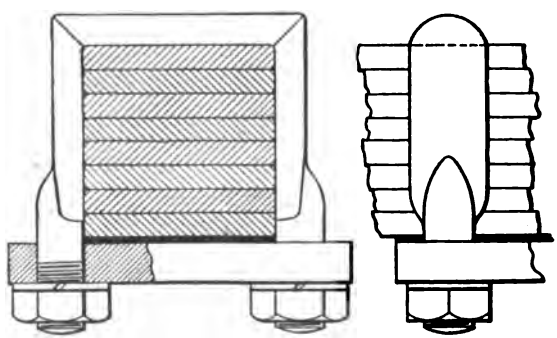

FIG. 358.—BOX CLIP.

wood have been used, but the best results are obtained with two layers of 8 ounce duck soaked in white lead. Fig. 358 shows a box clip fitted in place. However, heavy washers are now used and the units are made two diameters high.

If the rear springs take up the torque or brake reaction their perches must be securely fastened to the axle housings by riveting or otherwise. Else the perches swivel on the axle tube between shoulders, as shown in Fig. 359 at *A*. The perch is made in two parts, joined in a horizontal plane and held together by two square head bolts whose heads are sunk into the spring seats.

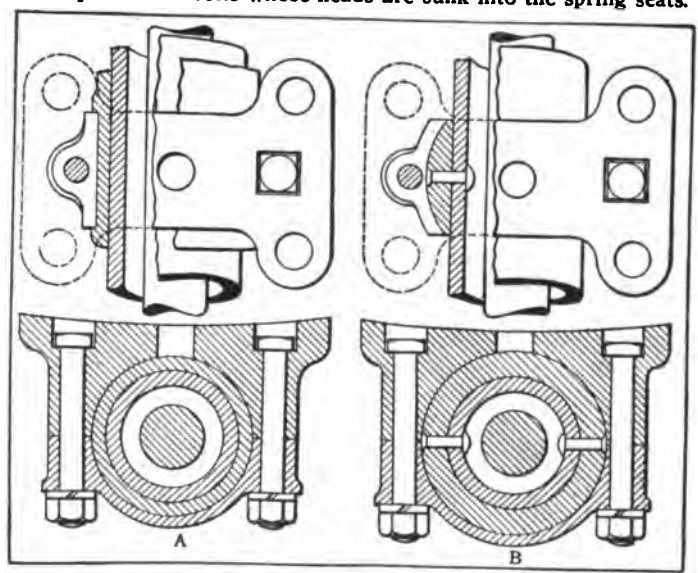

FIG. 359.—SPRING PERCHES.

Some designers form the upper part of the spring perch with lugs to which the radius rod connects.

Undoubtedly the best mounting for a spring perch is that illustrated in Fig. 359 at *B*. A sleeve with a spherical outside surface is riveted to the axle tube, and the perch, which is made in two parts, is bored out to fit this sphere, so as to give a universal connection. With the ordinary form of spring mounting, if one rear wheel, say, rises over an obstruction, both rear springs are subjected to torsional strains, which they are ill adapted to withstand, and this is avoided by using spring perches with spherical seats.

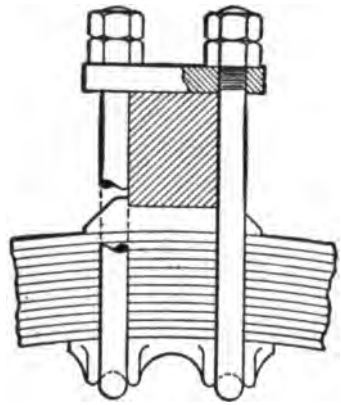

FIG. 360.—TIMKEN ADJUSTABLE SPRING PERCH.

Front and rear solid axles usually have the spring seats forged integral with them. However, a great many motor truck axles are manufactured by parts makers, and it is then practically impossible to provide in the dies for integral spring seats, because of variations in the width of the frame in different designs of trucks of substantially the same capacity. Fig. 360 illustrates the manner in which the Timken-Detroit Axle Company get around this difficulty. A spring block is placed on top of the axle and the spring secured in place by means of two clips or four bolts whose lower ends pass through cleats on the under side of the axle.

Instead of having the box clips bear directly upon the spring leaves, a pressure block is sometimes inserted between them. As

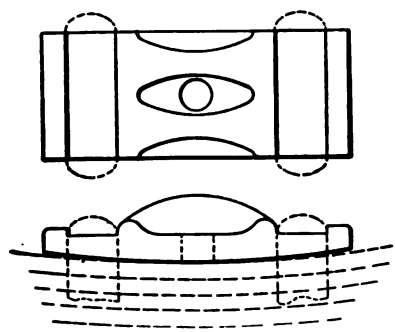

FIG. 361.—SPRING PRESSURE BLOCK.

shown in Fig. 361, this is made with grooves for the clips, with a hole or socket for the head of the centre bolt and with a curved under surface. This curved under surface obviates localization of the stress at the end of the spring seat and renders the whole length of the spring available for elastic deflection.

Rebound Clips and Reverse Leaves.—When the wheel strikes an obstacle in the road the spring near it is compressed, whereby energy is stored up. Immediately after the compression has ceased the spring distends again, and if the blow to the wheel was a heavy one the rebound will carry the body far beyond its original position of rest relative to the axle. The main leaf of the spring will thereby be curved in the reverse direction, and as it is not supported by the other leaves in this direction, it is apt to be stressed beyond the elastic limit by the rebound.

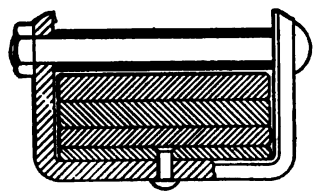

FIG. 362.—REBOUND CLIP.

There are several methods of preventing such injury to the main leaf. The most common consists in the use of rebound clips by which part of the load will be transferred during sharp rebounds from the main leaf to the second and third leaves. As shown in Fig. 362 the rebound clip is preferably riveted to the end of the shortest leaf which it surrounds, and a tubular spacer is slipped over the bolt to prevent the leaves being clamped between the ends of the U-shaped clip, whereby their free play under ordinary running conditions would be hampered. There is also another simpler form of clip, known as the clinch clip, which is simply a piece of flat steel bent into rectangular form, with the joint at the middle of one of the long sides. This form of clip is used mainly near the spring eyes, which hold it in position.

Another method of limiting the rebound consists in placing a couple of reversely curved leaves on top of the main leaf, as illustrated in Fig. 363. These reinforce the main leaf during the rebound and prevent its breakage. Finally, quite a number of makers now connect the frame at the rear with the axle tube by rebound straps, one on each side, which limit the rebound motion.

Alignment—Although the clips at the centre of a spring tend to hold the leaves in alignment, they alone are not sufficient, and some means of preventing lateral motion of the leaves must be

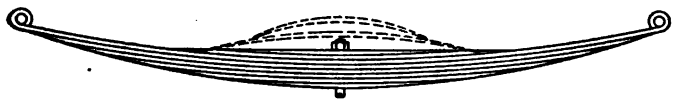

FIG. 363.—REVERSE LEAVES.

provided at their ends. One of the most common plans is to raise a central longitudinal rib on the leaves for a certain distance from the end, the rib on one leaf entering a corresponding gutter on the next. This method is quite successful, but unfortunately it does not permit of the use of clips on the leaves. Another widely followed plan consists in providing the ends of the leaves with lips, by drawing out the leaf stock laterally in the forge and bending the lips at right angles, as shown in Fig. 364. A third method consists in slotting the end of the leaf longitudinally and raising a nib on the leaf below it. The first and third methods are illustrated in Fig. 365, which figure shows all of the different spring points in use. The most common forms of points are the egg-shaped; round, short French; round end; slot and bead; ribbed and square, and tapered points.

Spring Eyes, Bolts and Shackles—The eyes are either turned in or out, or are in line with the main leaf, as illustrated in Fig. 366 at *A*, *B* and *C*, respectively. In-turned eyes are the most advantageous, as they are easier to make than the central eyes, and there is less danger of their opening up under the pressure of road shocks than with out-turned eyes. According to S. A. E. specifications, the width of the leaves at the eyes must be within 0.005 inch of the nominal size. In

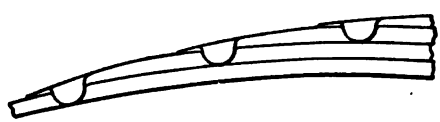

FIG. 364.—SPRING LIPS.

all high grade work the spring eyes are bushed with either phosphor bronze or steel. In case the latter material is used a seamless steel tube cut to the right length is forced into the eye and reamed out. With phosphor bronze bushings the bolt

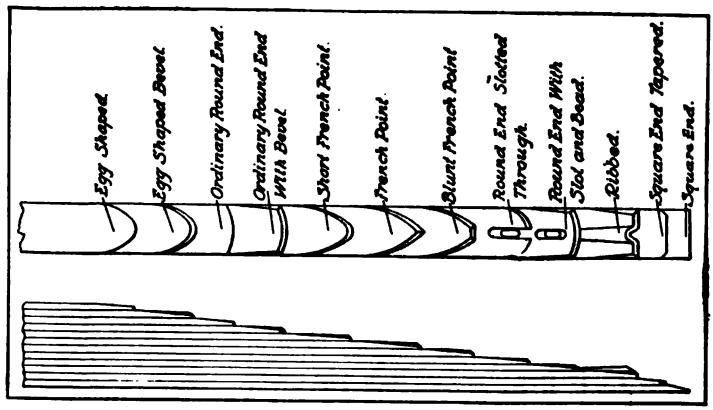

FIG. 365.—SPRING LEAF POINTS.

preferably should be case hardened and ground. The object of bushing, of course, is to provide means for readily renewing the wearing surface when that becomes necessary. The S. A. E. committee recommends bushings of one-eighth-inch wall thickness.

Truck springs occasionally are provided with elongated eyes, known as box eyes, which slide on rollers over the spring bolts; they are also made without eyes at either one or both ends, the ends sliding in combined wear plates and guides.

Some means must be provided for effectively lubricating the shackle bolts, as they are working continuously and will quickly wear out if they are allowed to remain dry. Small grease cups, with one-eighth inch pipe threaded stems, are

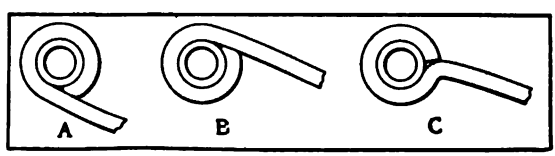

FIG. 366.—SPRING EYES.

screwed into the heads of these bolts, or the bolts are made with integral grease cups. Both methods are illustrated in Fig. 367. In the cheaper cars oil cups are provided instead of grease cups, or even only oil holes. In platform springs

the side springs are connected to the cross springs by means of double or universal shackles, as illustrated in Fig. 368. These should be made as short as possible, especially in the case of pleasure cars, as there is always an unpleasant swaying of cars fitted with platform springs when driven at speed, which is one of the chief reasons why platform springs were largely given up for three-quarter elliptic on pleasure cars. These springs are now used to quite an extent on motor trucks of the speedier class. In this class of work the double shackle usually consists of two substantially U-shaped members which are hooked together, the same as used on horse trucks, so there are only two pivot joints to each double shackle.

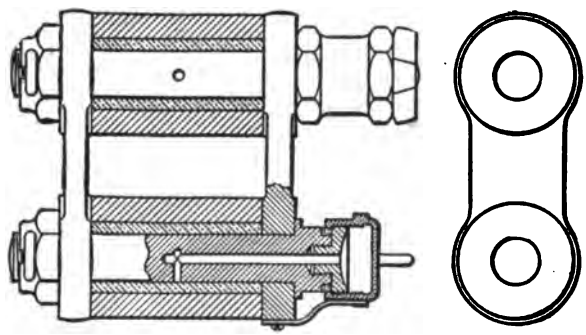

FIG. 367.—SPRING SHACKLES AND SHACKLE BOLTS.

The distance apart of the spring brackets should be fixed so that when the spring carries its normal load the shackles stand vertically, whether they be in tension or compression. This arrangement gives the greatest assurance that the shackles will never come into a position parallel to the ends of the main leaf in which the spring is locked. To prevent the reversal of shackles due to excessive rebound they are now often made of substantially U-shape, as shown in Fig. 369, which limits their angular motion. These are known as non-reversible shackles.

Inclined Springs.—Front half elliptic and full elliptic springs occasionally are set so that the line connecting the two spring eyes is not horizontal, but slants upward in the forward direction. The reason for this is that the direction of the worst shocks on the spring is not vertical but slightly inclined to the rear, and it is, of course, advantageous to have the direction of heavy shocks coincide with the direction of spring

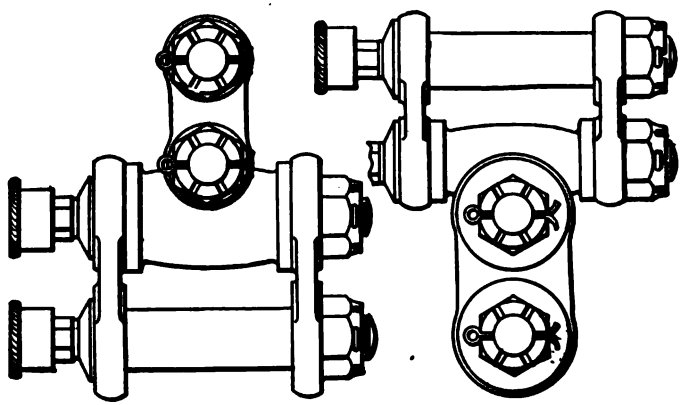

FIG. 368.—DOUBLE SHACKLES FOR PLATFORM SPRINGS.

play. This inclination can be obtained with semi-elliptic springs by placing the eye of the rear bracket slightly lower than the eye of the front bracket, and with full elliptic springs by suitably inclining the seat of the spring bracket on the frame. Full elliptic and three-quarter elliptic springs are sometimes clipped to the under side of the axle in order to lower the frame, and are then said to be underslung.

Torsion and Thrust on Spring—In a few cars the torsion due to the rear axle drive, the driving thrust of the rear wheels, and the torsion and thrust due to the action of the

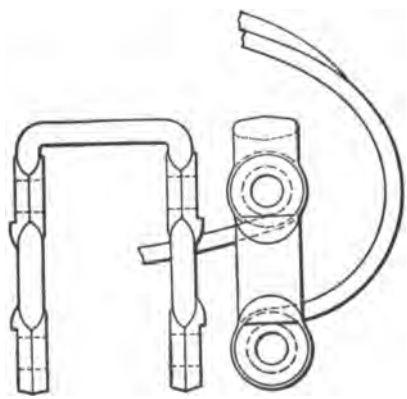

FIG. 369.—NON-REVERSIBLE SHACKLE.

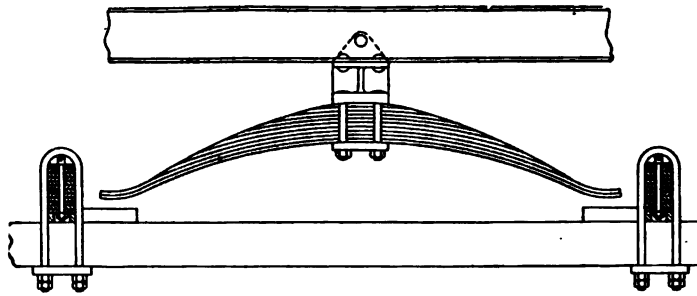

FIG. 370.—AUXILIARY TRUCK SPRING.

brakes are taken up by the springs. Since only the main leaf connects the axle to the frame it is on this leaf that most of the extra strain due to these forces comes. This makes it necessary to use leaves of comparatively little arch and to provide spring clips. Engineering opinion regarding this practice is divided; some regard it as crude and unsatisfactory, while others claim to be highly advantageous.

Auxiliary Springs—Auxiliary or jack springs are used on motor trucks to take up part of the load when the truck is heavily loaded. They are generally secured to the top of the half elliptic springs, and their ends come in contact with wear plates on the under side of the frame side rails after the main leaves have compressed a certain amount. Another plan is to secure the jack spring to the under side of a frame cross member and let its ends bear against wear plates on the rear axle. (Fig. 370.)

Lubrication—Although friction between leaves is desirable to an extent, because it dampens the rebound, yet it is necessary to keep the leaves lubricated where they bear one against another. The common plan is to pry the leaves apart in some manner and introduce lubricant between them with a table knife. To enable the leaves to hold the lubricant they are now rolled of the section shown in Fig. 371, so as to form a grease retaining space between them. Lubrication of

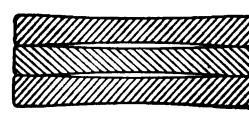

FIG. 371.

the leaves is necessary mainly because without it there is an objectionable squeak, though, of course, it also results in reducing frictional losses.

Some makers in designing their springs take account of the fact that the torque reaction of the motor increases the load on the springs on the right side of the car and decreases that on the springs on the left side (for a motor rotating right handedly) by making the right hand springs slightly stiffer, but this effect is usually neglected.

CHAPTER XIX.

ROAD WHEELS.

There are essentially three types of wheels used on motor cars, viz., artillery wood wheels, which are used on the great majority of all vehicles; steel wire wheels, which are used on some pleasure cars, and cast steel wheels, which are used on heavy trucks. Disc wheels made from pressed steel are also being used, but only in rare instances.

Artillery Wheels.—Wood artillery wheels consist of a set of spokes turned from some very tough wood, generally hickory, which are clamped at their inner end between flanges on a metal hub and at their outer end are tenoned into a wooden felloe, which later is surrounded by a steel band or ring. The spokes are turned to an elliptic section, and great pains must be taken to get the fibre to run exactly in the direction of the spoke length. The spoke billets must be split and not sawed.

Spoke and Felloe Material.—The spokes and felloes of artillery wheels are made from well seasoned or kiln dried hickory, which is used because it combines strength, toughness and elasticity in the highest degree. Hickory grows in many parts of the United States, but the best qualities are said to come from the Ohio Valley and from the northern portions of the country. Second growth stock and stock from the lower portion of small trees yield the best parts. The wood should preferably be cut when all the sap is out of the tree, which makes the cutting season in the southern part of the country exceedingly short. Hickory is mostly cut by mill men operating portable saw mills, who, when the supply in a certain district is exhausted, move their plant to another part. These mill men sell their stock to the wheel makers.

Wheel Diameters.—It is now the universal custom in pleasure car design to use wheels of the same diameter in front and rear, because with equal sized front and rear tires only a single spare need be carried. The most common wheel diameters for pleasure

cars are 32, 34 and 36 inches. Wheel diameters vary with the wheelbase substantially as follows:

	Inches.
Less than 100 inch wheelbase	30
100 to 110 inch wheelbase	32
110 to 120 inch wheelbase	34
115 to 135 inch wheelbase	36

It will be noticed that the wheelbase ranges for 34 inch and 36 inch wheels overlap. For wheelbases between 110 and 120

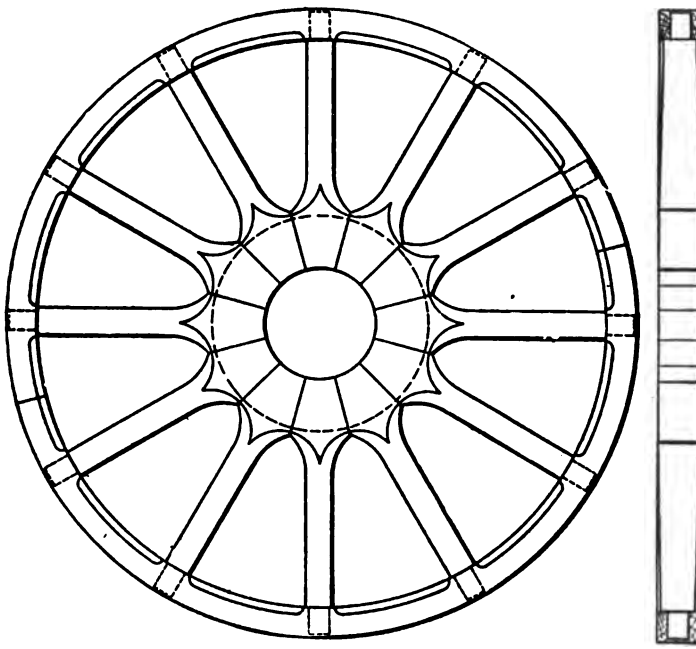

FIG. 372.—SPOKE AND FELLOE ASSEMBLY OF PLEASURE CAR WHEEL.

inches 36 inch tires are used on the more expensive cars and 34 inch on the lower priced. Outside wheel diameters are always expressed in even numbers of inches, except when the so-called mongrel tires are used; that is, a tire of a given width on a rim designed for a tire one-half inch narrower. A few makers have used wheels of 40 and 42 inches diameter, but such cases are rare. One reason for using such large wheels is the desire

to secure ample ground clearance in underslung cars. Large wheels, of course, improve the riding qualities of the car and add to the life of the tires, but these advantages are at least partly

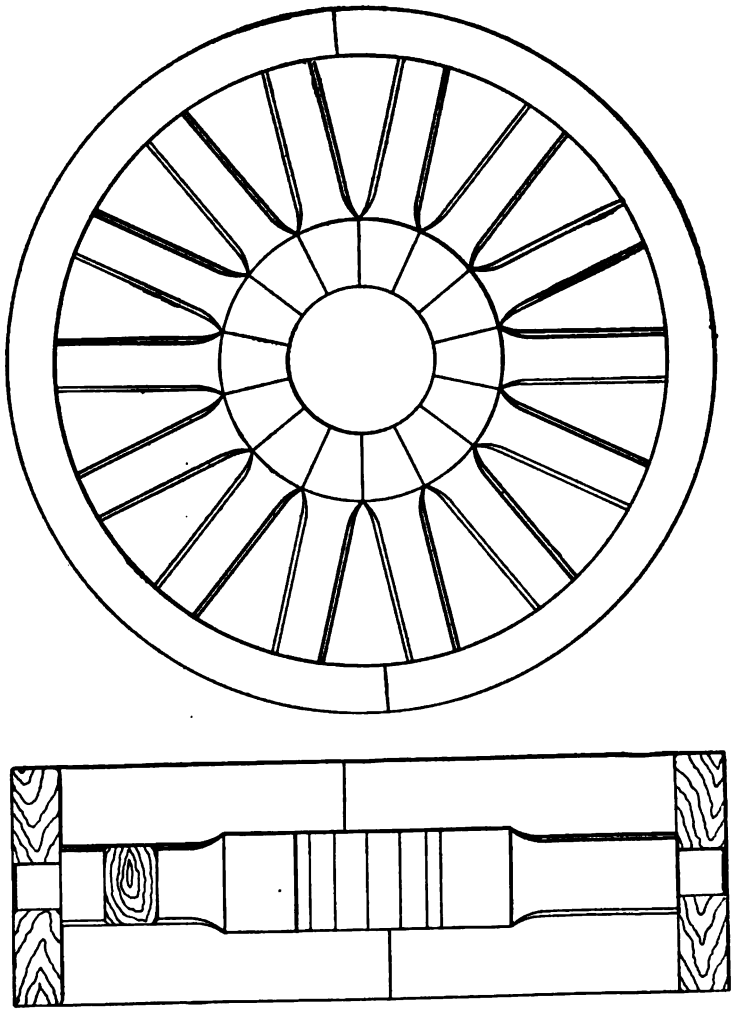

FIG. 373.—SPOKE AND FELLOE ASSEMBLY OF TRUCK WHEEL.

offset by their increased cost. They also greatly increase the stress in the axles, as the leverage of a lateral shock to the wheel is proportional to the wheel diameter.

In motor truck work 34 and 36 inch wheels are used almost exclusively, irrespective of size, except that the rear wheels of 5-ton and over trucks sometimes are made as large as 42 inches in diameter. In this connection it may be pointed out that in motor trucks the front wheels are frequently made of somewhat smaller diameter, since, until recently, solid rubber tires were not made so they could be interchanged by the driver, and, therefore, there was no advantage in interchangeable front and rear tires.

The diameter of the wood wheel is less than the nominal wheel diameter by twice the height of the tire and rim. For solid tired wheels the dimensions have been standardized by the S. A. E. and the standard specifications will be found in the appendix to this volume. Standardization of pneumatically tired wheels along similar lines is now under way.

Number of Spokes—Front wheels of pleasure cars are made with either 10 or 12 spokes, rear wheels of pleasure cars with 12 spokes. For motor trucks the numbers of spokes are made substantially as follows:

Load Capacity.	Front.	Rear.
One ton or less	12	12
1½ to 2½ tons	12	14
2½ to 4½ tons	14	14
Over 4½ tons	14	16

Proportions of Spokes—Until quite recently it was the universal practice to make spokes of an elliptic section, the width of the spoke averaging three-fourths its depth in the direction of the wheel axis. Lately, however, spokes of square or rectangular section have come into extensive use for truck wheels and bid fair to oust the elliptic spoke entirely for that purpose, since the rectangular spoke is stronger in proportion to weight than the elliptic spoke. The width of the spoke is generally made constant from end to end, but the depth or thickness (dimension in the direction of the wheel axis) tapers about ⅛ inch from hub to felloe. However, in heavy truck wheels, which, on account of their dual and even triple tires, require very wide felloes, the thickness of the spoke is sometimes made increasing from the hub toward the felloe. Improved turning lathes have recently been introduced in wheel manufacture which allow of obtaining two opposite tapers in one operation.

The tenons, which are forced into holes drilled in the felloes, are made equal in diameter to about one-half the depth of the spoke. One wheel maker says that they should be made of such length that they extend entirely through the felloe and bear up

machined cylindrical surface so as to be accurately guided. Some manufacturers round the inner inside edge of the movable flange, but wheel makers say that this practice is to be condemned. If the flange has a fairly sharp corner and meets the hub barrel at 90 degrees the clamped surface of the spoke mitre is considerably longer and the spoke is held so much more securely. Nearly all trouble with artillery wood wheels is due to shrinkage of the spokes, causing looseness in the hubs.

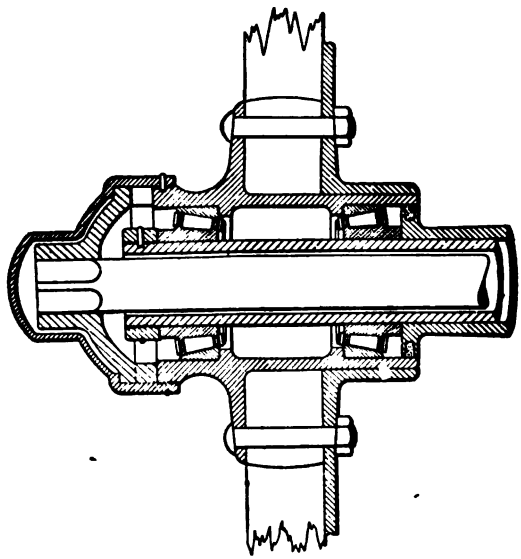

FIG. 375.—TRUCK REAR HUB.

There is much variety in respect to the number of flange bolts used, and the manner of locating them. The most extensive practice is to use one bolt for every two spokes and to place it between the mitres of adjacent spokes. However, some manufacturers use a bolt for each spoke, placing it between adjacent spokes, while still others pass it right through the centre of the mitre.

Securing Sprockets and Brake Drums—Where a brake drum is secured to the rear wheel it is sometimes fastened only by the regular hub flange bolts, the pressed steel drums serving also as the loose flange of the hub. In this case, naturally, the

integral flange is made of considerable diameter and the flange bolts are placed as far out as possible. Other designers, however, use two circles of bolts, one passing through the integral flange, spoke and brake drum, and the other, outer one, through the spoke and brake drum only. In the latter case the spokes are generally enlarged where the bolts pass through them, as shown in Fig. 376 at *A*. Instead of securing the brake drum by means of bolts, some designers provide clips, as shown in the same figure at *B*. Where brake drums are directly secured to wheel spokes it is desirable that the flat of the spokes at the joint with the drum be equal to the greatest width of the spoke, as otherwise a sharp angle is formed at the joint, in which dirt collects.

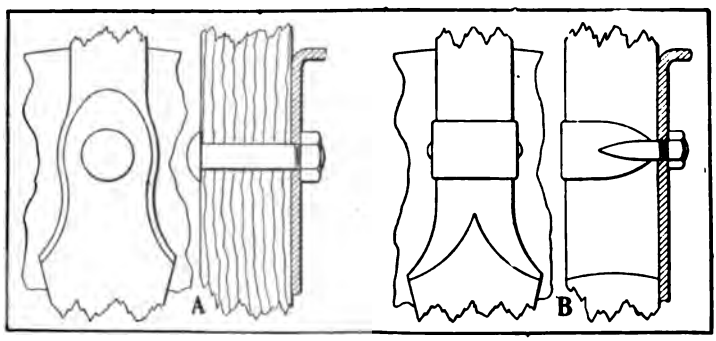

FIG. 376.—BRAKE DRUM FASTENINGS.

In order to strengthen the spoke assembly at the centre the Schwarz Wheel Company makes the mitre of the spokes interlocking, as illustrated in Fig. 377, and some other manufacturers provide keys between the mitres of adjacent spokes.

Hub Caps.—Wheels are held in place on the axle spindles by nuts on the ends of the latter, which bear against the inner race of the outermost anti-friction bearing and which are locked against unscrewing by split pins or similarly effective means. However, the hubs are provided at their outer ends with screw caps, in order to retain the lubricant in the bearing and exclude dust and grit, as well as for the sake of appearance. These hub caps are provided with a comparatively fine thread, and screw up against a shoulder formed on the hub barrel, the thread being either on the inside or outside of the barrel. As loss of hub caps is a very annoying thing, they are often locked by the

familiar spring wire ring locking device, while the hub caps of motor trucks, which, on account of the greater vibration on solid tired vehicles, are particularly apt to shake loose, are sometimes made with a small drilled lug and wired to one of the spokes to prevent their loss. In order to make it possible to conveniently remove them, the hub caps of pleasure cars are generally provided with a hexagonal outer portion to which a monkey wrench can be applied, or with a slotted flange taking a special wrench. A good scheme in connection with large truck hub caps is to cast them with four square lugs on their outer plane surface, between which a pry bar can be inserted.

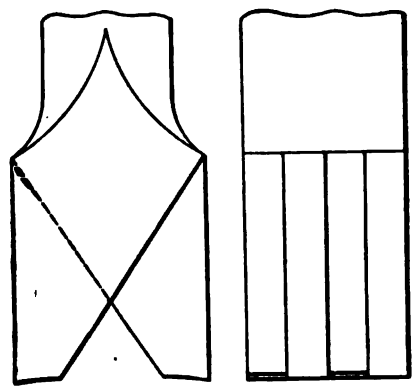

FIG. 377.—SCHWARZ INTERLOCKING SPOKE.

Owing to the difficulty of unscrewing a cap with a thread 3 to 4 inches in diameter, some makers secure the hub caps by means of cap screw bolts. It is a common practice to cast the name of the manufacturer or his trade mark on the hub cap. For light cars the caps are sometimes made of sheet metal.

Dished Wheels—Front wheels, as well as rear wheels of those shaft driven cars which have an arched rear axle are generally dished; that is, the spokes are set at an angle with a plane perpendicular to the axis of the wheel. In standard American practice the dish is made 2 degrees. This must be provided for in turning the hub flanges. Dishing greatly adds to the lateral strength of the wheel, because it distributes the stress due to any lateral shocks over a considerable number of spokes. Wheel makers who have been accustomed to dished wheels all their lives—these wheels being used exclusively for horse vehicles—

also maintain that dishing adds to the beauty of a wheel. The dish of the spokes and the set or camber of the axle should preferably be alike, as then the bottom spokes, which carry the load, will stand vertical.

Manufacture of Wheels—At the wheel manufacturing plants the spoke billets and felloe strips arrive in the green state, and the first operation consists in kiln drying them. They are packed in the kiln, which is now generally heated by steam, and the best results are said to be obtained by starting with a low heat, gradually increasing it to a maximum and then decreasing it again. After this process has been completed the billets for the spokes are placed in eccentric turning machines and the barrel portion of the spokes is turned substantially to size, while the head end is left in the rough state. The spokes then go back for another drying treatment in the kiln, after which the head ends are mitred and faced, and the spokes are equalized and sanded.

The felloe stock as it arrives from the saw mill is steamed in both exhaust and live steam, and is then bent to the proper curvature, after which it is placed in the kiln and dried for from 20 to 30 days. Upon the completion of the drying treatment, the felloes are planed, bored, rounded and sanded. The felloe of a wheel is always made in halves, and the next operation consists in assembling each half felloe with its spokes, the tenons of the spokes being forced into the felloe. Next, the two halves of the wheel are inserted in a screw press and forced on to a dummy hub. They are then equalized; that is, reduced to the same height, and the wheel is then reduced to the proper diameter for the steel band. The latter is heated before being applied to the felloe, and after being put in place is compressed on it by means of an hydraulic press. The dummy hub is then taken off and the wheel is sanded and primed or oiled, and the hub and other metal parts are fitted to it. The two halves of the felloe are joined together by means of steel plates extending across the joint and secured to the felloes by bolts.

Wire Wheels—Wire wheels were used in this country to a considerable extent in the early days of the automobile, but, probably on account of too light construction, gave a great deal of trouble and were soon discarded. They were reintroduced by an English manufacturer about 1908, and are now widely used abroad, and also being taken up again in this country. The chief advantage of the wire wheel is that, as compared with a wood artillery wheel, it has a much greater lateral strength in pro-

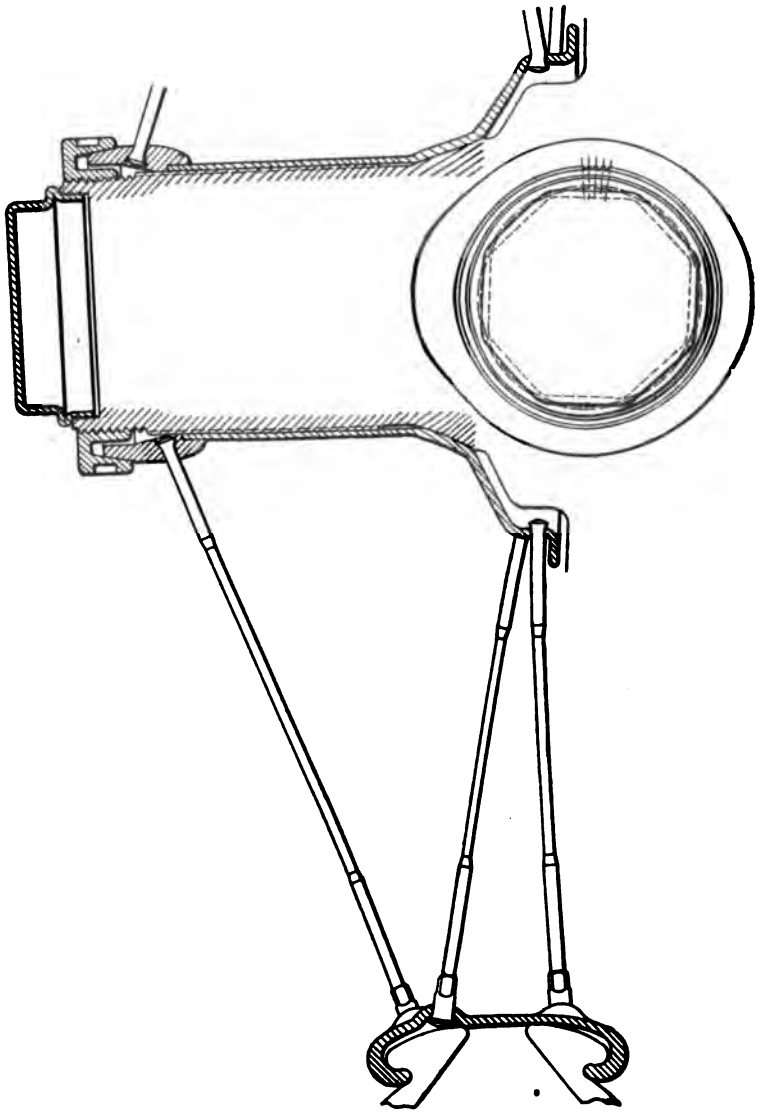

FIG. 378.—SECTIONAL VIEW OF RUDGE-WHITWORTH WIRE SPOKE

portion to its weight. This makes it possible to use wheels of smaller weight, which are easier on tires, and some comparative tests made by the London Taxicab Company are said to have shown a remarkable tire economy in favor of the wire wheel. An objection to the wire wheel is that it is not as easily kept clean as an artillery wood wheel.

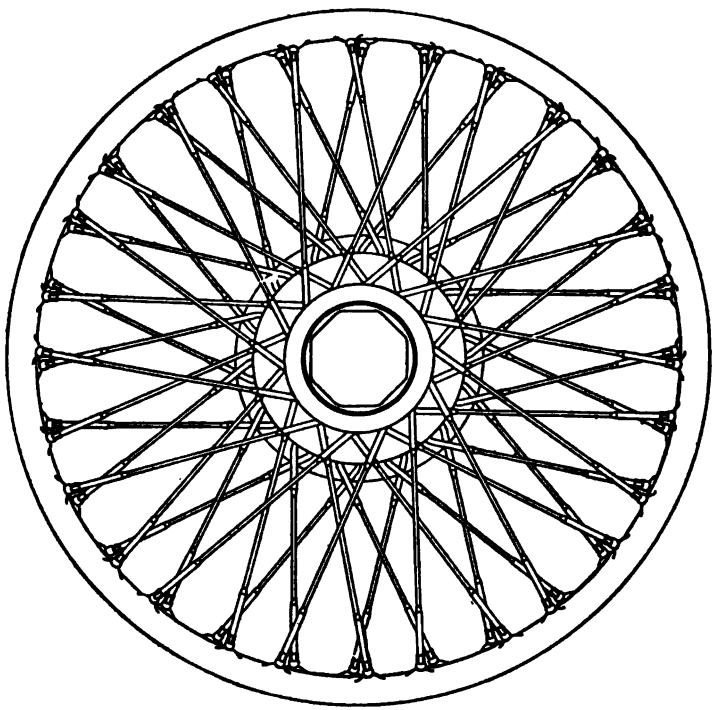

FIG. 379.—SIDE VIEW OF WIRE WHEEL.

At present wire wheels are generally made of the demountable type, these wheels abroad being provided with a hub in the form of a comparatively thin steel shell formed with serrations on its inner circumference, which is slipped over the regular hub on the axle and secured in place by means of a clamping nut. The Rudge-Whitworth wheel, illustrated in Fig. 378, is of this type. Such a wheel serves the same purpose as the demountable rim generally used in this country, one or more complete

extra wheels being carried on the car, and in case a tire puncture or other tire defect is suffered, the wheel carrying the damaged tire is removed and one of the spare wheels with its tire already inflated is substituted therefor. In the McCue, a wire wheel made in this country, the hub of the wheel is driven by a number of pins secured into a flange of the inner hub and extending through holes in the outer hub.

The so-called triple spoke construction, illustrated in Fig. 378, is generally employed for automobile wire wheels. One-half of the spokes in the outer row extend tangentially in one direction and the other half in the opposite direction. The inner row of spokes and the intermediate row also extend in opposite directions, respectively. Owing to the fact that the thread at the outer end of the spokes reduces their effective cross section and that that portion of the spoke near the head is subjected to bending stresses in addition to the tension on it, it is customary to swage down the middle portion of the spoke so as to make it substantially equal in strength to the threaded portion, thus eliminating unnecessary weight. In order to secure the necessary lateral strength the hubs must be made of considerable length and the spoke flanges placed as far apart as possible.

As regards the necessary size of spokes, it may be said that a touring car of recent design, weighing with load approximately 5,000 pounds, has 36 inch wire wheels with 56 spokes each, swaged down at their middle portion to $\frac{7}{16}$ inch diameter.

Cast Steel Wheels—Probably the greatest amount of trouble with artillery wood wheels has been experienced with those used on heavy trucks. Owing to the very thick spokes required in these wheels, a comparatively slight proportional shrinkage of the spokes causes them to loosen in their hubs, and the rather severe jarring of the wheels due to the use of solid tires then has a very destructive action. For this reason cast steel wheels are latterly being used to an increased extent in motor truck practice. These wheels were first used in Germany, and the greatest amount of experience with them has been gained in that country. We show herewith (Fig. 380) a sectional view of the cast steel rear wheel, as specified for German military trucks. These trucks are designed for a maximum total load of 5½ metric tons on the rear axle, and the rear driving wheels are to be fitted with dual solid tires of 41 inches outside diameter, 5.6 inches width and 3.6 inches depth, the cast steel portion of the wheel being 34 inches in outside diameter. It will be seen that the wheel is provided with a hollow spoke of about 3 inches

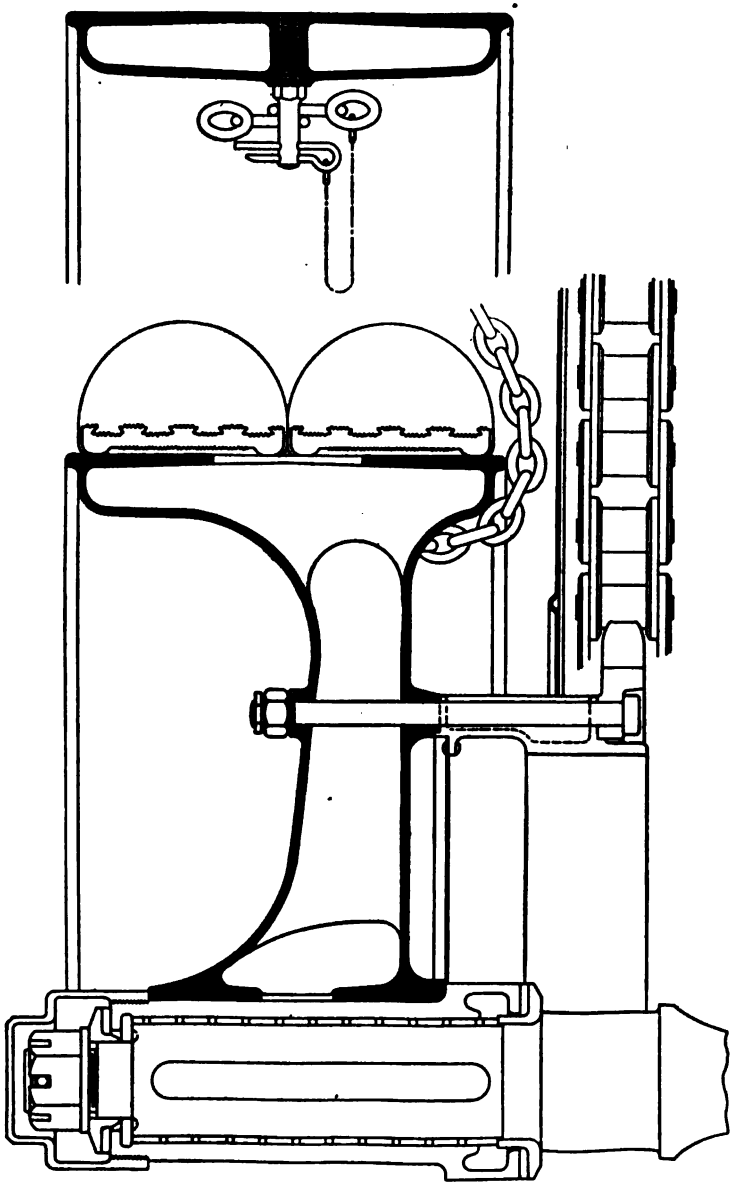

FIG. 380.—CAST STEEL REAR WHEEL OF GERMAN MILITARY TRUCK.

minimum depth, the wall of the spokes as well as the inner wall of the rim being a shade below ¼ inch in thickness. These wheels are provided with plain parallel bearings, in which respect they differ from cast steel wheels used in this country, as it is customary here to use anti-friction bearings. In the majority of cases the spokes are made cross shaped, which makes the molding a good deal easier, but the hollow round spoke is neater in appearance and also has the advantage with respect to lateral strength, at least in the case of trucks of large capacity.

Floating Bushings—Abroad the road wheels of motor trucks are frequently fitted with floating bushings instead of with antifriction bearings and the Government specifications for military subsidy vehicles of some countries specify these bushings. One of the advantages of this construction is that with it the wheel can be quickly removed and replaced in case of tire trouble. Except when starting from rest, a plain bearing with floating bushing offers not very much more resistance than an antifriction bearing.

In order to ensure satisfactory lubrication, the clearance on both the inside and outside of the bushing should be from 0.008 to 0.012 inch, for diameters of 3 to 4 inches. If the clearance is too small the lubrication is not so dependable. The bushings are drilled with numerous oil holes and it is recommended that these be spaced on helical lines. The bearing surfaces of both the axle and the hub must be carefully ground and polished, and unless the hub is of a metal showing a fine texture, it is best to bore it out and force in a steel liner under hydraulic pressure, which is then either ground or reamed. The wheel bearings should be so proportioned that the unit pressure due to the weight and traction effort combined, does not exceed 400 lbs. per square inch. If this load is not exceeded and if the lubricating system is carefully worked out the bushings will give a very satisfactory life.

APPENDIX

Clutch Spring Table.

The following table permits of readily determining the size of wire required for clutch springs of certain lengths and diameters of coil, to exert a certain pressure. *D* denotes the mean diameter of the coil (from centre to centre of wire), which is equal to the outside diameter minus the diameter of the wire; *d*, the diameter of the wire; *W*, the maximum safe pressure a spring of the particular diameter of coil and diameter of wire will sustain, and *F*, the deflection of one coil under a pressure of 100 pounds. It will be noticed that three different values are given for *F* for each size of wire and diameter of coil; these correspond to coefficients of torsional elasticity of 10,000,000, 12,000,000 and 14,000,000, respectively. The maximum safe pressure is calculated on the basis of a stress of 50,000 pounds per square inch.

	D =	1½"	1⅝"	1¾"	1⅞"	2"	2⅛"	2¼"	2⅜"
d = ¼"	*W* =	204.5	188.5	175.0	163.4	153.1	144.1	136.1	129.0
	F	.0697	.0882	.1108	.1335	.1643	.1967	.2390	.2751
		.0581	.0735	.0924	.1109	.1367	.1639	.1949	.2293
		.0498	.0629	.0791	.0953	.1172	.1406	.1671	.1965
	W =	389.9	367.3	341.1	318.3	298.4	280.9	265.3	251.3
5/16"	*F*	.0283	.0358	.0450	.0541	.0667	.0800	.0951	.1102
		.0236	.0299	.0375	.0452	.0555	.0667	.0793	.0931
		.0201	.0256	.0321	.0387	.0476	.0571	.0679	.0799
	W =	663.1	636.8	591.3	551.9	517.4	486.9	459.9	435.7
⅜"	*F*	.0137	.0174	.0218	.0263	.0323	.0388	.0472	.0542
		.0114	.0145	.0182	.0219	.0269	.0323	.0384	.0451
		.0098	.0124	.0156	.0188	.0230	.0277	.0329	.0387
	W =	1041.	1009.	936.9	874.4	819.8	771.5	728.7	690.3
7/16"	*F*	.0062	.0079	.0099	.0119	.0146	.0176	.0209	.0246
		.0052	.0066	.0082	.0099	.0122	.0146	.0174	.0202
		.0045	.0056	.0071	.0085	.0105	.0126	.0149	.0175
	W =	1636.	1510.	1402.	1309.	1227.	1155.	1091.	1033.
½"	*F*	.0044	.0055	.0069	.0083	.0102	.0123	.0146	.0172
		.0036	.0046	.0058	.0069	.0084	.0102	.0122	.0134
		.0031	.0041	.0054	.0060	.0074	.0089	.0105	.0124

Moments of Inertia of S. A. E. Standard Tubes.

Outside Diameter—In. Wall Thickness. (In Decimals).	½	⅝	¾	⅞	1	1⅛	1¼	1⅜	1½	1¾	2	2¼	2½	2¾	3	3¼	3½
B. W. G. 20	.035	.0014	.0028	.0050	.0082	.0124	.0178	.0247	.0331	.0432	....	....	....	....	....	....	....	....
B. W. G. 18	.049	.0018	.0037	.0067	.0109	.0166	.0240	.0334	.0449	.0589	....	....	....	....	....	....	....	....
B. W. G. 16	.065	.0021	.0045	.0083	.0136	.0211	.0304	.0476	.0624	.0755	.1274	.1838	.2647	.3724	.4925	....	....	....
B. W. G. 13	.095	.0026	.0057	.0107	.0179	.0279	.0409	.0582	.0846	.1042	.1692	.2559	.3725	.5253	.6976	.9087	1.168	1.541
B. W. G. 11	.120	.0027	.0064	.0124	.0208	.0326	.0484	.0692	.0991	.1279	.2048	.3125	.4515	.6375	.8587	1.043	1.482	1.865
B. W. G. 10	.134	.0029	.0072	.0130	.0226	.0348	.0519	.0745	.1058	.1349	.2232	.3435	.5009	.7063	.9349	1.178	1.715	2.037
5/32 in.	.156	....	....	.0137	.0239	.0381	.0572	.0819	.1129	.1509	.2508	.3873	.5663	.7935	1.075	1.415	1.822	2.299
3/16 in.	.188	....	....	.0146	.0257	.0416	.0631	.0911	.1264	.1699	.2849	.4431	.6514	.9165	1.246	1.645	2.123	2.685
¼ in.	.250	....	....	....	....	.0460	.0711	.1043	.1467	.1994	.3405	.5369	.7978	1.132	1.549	2.059	2.669	3.390
5/16 in.	.313	....	....	....	....	....	....	.1124	.1597	.2197	.3818	.6099	.9158	1.311	1.806	2.414	3.146	4.013
⅜ in.	.375	....	....	....	....	....	....	.1168	.1680	.2330	.4113	.6656	1.010	1.457	2.022	2.718	3.559	4.559
½ in.	.500	....	....	....	....	....	....	....	....	.2454	.4449	.7363	1.138	1.669	2.347	3.191	4.218	5.449
⅝ in.	.625	....	....	....	....	....	....	....	....	....	....	.7699	1.209	1.798	2.559	3.516	4.691	6.108

The polar moments of inertia of the tubes are equal to twice the above values.

Section Moduli of S. A. E. Standard Tubes

Outside Diameter—In. Wall Thickness. (In Decimals).	½	⅝	¾	⅞	1	1⅛	1¼	1⅜	1½	1¾	2	2¼	2½	2¾	3	3¼	3½
B. W. G. 20	.035	.0056	.0091	.0134	.0187	.0247	.0317	.0395	.0481	.0577	....	....	....	....	....	....	....	....
B. W. G. 18	.049	.0072	.0119	.0178	.0249	.0332	.0427	.0534	.0653	.0785	....	....	....	....	....	....	....	....
B. W. G. 16	.065	.0084	.0144	.0221	.0312	.0423	.0541	.0762	.0906	.0975	.1457	.1838	.2352	.2981	.3580	....	....	....
B. W. G. 13	.095	.0096	.0182	.0285	.0409	.0558	.0728	.0932	.1229	.1388	.1934	.2559	.3310	.4197	.5063	.6050	.7189	.8822
B. W. G. 11	.120	.0108	.0204	.0331	.0476	.0652	.0860	.1107	.1441	.1705	.2340	.3125	.4015	.5098	.6238	.6953	.9143	1.065
B. W. G. 10	.134	.0116	.0231	.0347	.0517	.0697	.0923	.1191	.1538	.1799	.2549	.3435	.4452	.5650	.6797	.7848	1.055	1.162
5/32 in.	.156	....	....	.0366	.0545	.0762	.1018	.1311	.1642	.2012	.2866	.3873	.5034	.6348	.7815	.9436	1.121	1.314
3/16 in.	.188	....	....	.0388	.0588	.0832	.1122	.1457	.1838	.2265	.3256	.4431	.5790	.7332	.9059	1.097	1.306	1.534
¼ in.	.250	....	....	....	....	.0920	.1265	.1669	.2134	.2659	.3892	.5369	.7090	.9057	1.127	1.372	1.643	1.937
5/16 in.	.313	....	....	....	....	....	....	.1798	.2326	.2930	.4363	.6099	.8140	1.049	1.314	1.610	1.936	2.293
⅜ in.	.375	....	....	....	....	....	....	.1869	.2443	.3106	.4701	.6656	.8974	1.166	1.471	1.812	2.190	2.605
½ in.	.500	....	....	....	....	....	....	....	....	.3272	.5084	.7363	1.012	1.335	1.707	2.127	2.596	3.114
⅝ in.	.625	....	....	....	....	....	....	....	....	....	....	.7699	1.075	1.438	1.861	2.344	2.887	3.490

Tubes of less than 2 inches outside diameter will vary from .005 inch minus to .005 inch plus on both inside and outside diameters; larger tubes, .010 inch.

S. A. E. Yoke and Rod Ends.

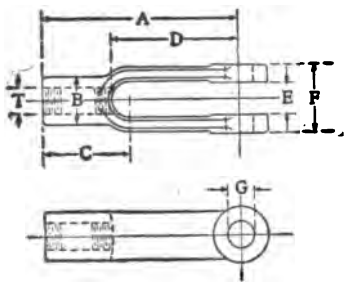

ADJUSTABLE YOKE END.

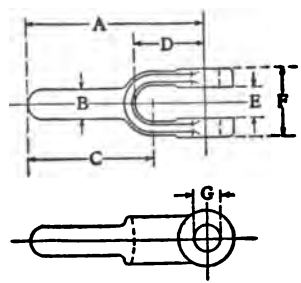

PLAIN YOKE END.

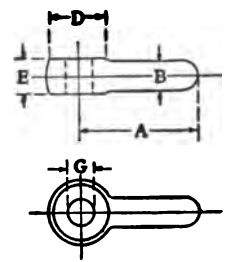

ROD END.

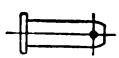

ADJUSTABLE YOKE ENDS.

A.	B.	C.	D.	E.	F.	G.	T.
1 9/16	5/16	11/16	1	3/16	7/16	3/16	3/16—32 U. S.
2	7/16	⅝	1¼	9/32	⅝	¼	¼ —28 A. L. A. M.
2¼	½	1	1 7/16	11/32	¾	5/16	5/16—24 A. L. A. M.
2½	⅝	1⅛	1⅝	7/16	⅞	⅜	⅜ —24 A. L. A. M.
2⅞	23/32	1¼	1⅞	½	1	7/16	7/16—20 A. L. A. M.
3	13/16	1 7/16	1⅞	9/16	1⅛	½	½ —20 A. L. A. M.

PLAIN YOKE ENDS.

A.	B.	C.	D.	E.	F.	G.
1¼	3/16	⅞	7/16	3/16	7/16	3/16
1¾	¼	1¼	⅝	9/32	⅝	¼
2	5/16	1⅜	¾	11/32	¾	5/16
2⅛	⅜	1 7/16	27/32	7/16	⅞	⅜
2¼	7/16	1½	1	½	1	7/16
2½	½	1⅝	1⅛	9/16	1⅛	½

ROD ENDS.

A.	B.	D.	E.	F.
1¼	3/16	⅜	3/16	3/16
1¼	¼	½	9/32	¼
1⅜	5/16	19/32	11/32	5/16
1½	⅜	11/16	7/16	⅜
1½	7/16	13/16	½	7/16
1¾	½	15/16	9/16	½

Round Taper Fittings (Taper 1:8).

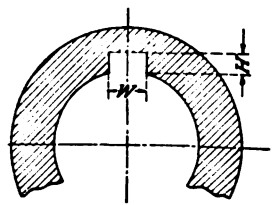

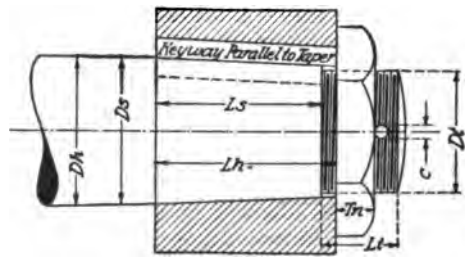

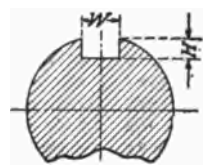

Nominal Dia.	Ds. Shaft.	Dh. Hole.	Ls.	Lh.	Lt.	Dt.	Threads Per Inch.	Tn.	Short Dia. of Nut.	W.	H.	Square Key.	C.
¼	.250—.249	.248—.247	5-16	⅜	5-16	3-16	32	5-32	9-32	.0625—.0620	.0337—.0327	.0635—.0630	1-16
⅜	.375—.374	.373—.372	7-16	½	7-16	5-16	24	17-64	½	.0937—.0932	.0494—.0484	.0947—.0942	5-64
½	.500—.499	.498—.497	11-16	¾	7-16	5-16	24	17-64	½	.1250—.1245	.0650—.0640	.1260—.1255	5-64
⅝	.625—.624	.623—.622	11-16	¾		½	20	¼	¾	.1562—.1557	.0806—.0796	.1572—.1567	3-32
¾	.750—.749	.748—.747	15-16	1		½	20	¼	¾	.1875—.1870	.0963—.0953	.1885—.1880	3-32
⅞	.875—.874	.873—.872	1 1/16	1 ¼		⅝	20	5-16	1	.2500—.2490	.1275—.1265	.2510—.2505	1/8
1	1.001—.999	.997—.995	1 1/16	1 ½		⅝	20	5-16	1	.2500—.2490	.1275—.1265	.2510—.2505	1/8
1⅛	1.126—1.124	1.122—1.120	1 1/16	1 ½		⅝	20	5-16	1	.3125—.3115	.1610—.1590	.3140—.3130	1/8
1¼	1.251—1.249	1.247—1.245	1 1/16	1 ½		⅝	20	5-16	1½	.3125—.3115	.1610—.1590	.3140—.3130	1/8
1⅜	1.376—1.374	1.372—1.370	1 7/16	2		⅝	20	5-16	1½	.3750—.3740	.1925—.1905	.3765—.3755	1/8
1½	1.501—1.499	1.497—1.495	1 7/16	2		⅝	20	5-16	1½	.3750—.3740	.1925—.1905	.3765—.3755	1/8
1¾	1.751—1.749	1.747—1.745	2 1/16	2¼		¾	18	7-16	2 1/16	.4375—.4365	.2237—.2217	.4390—.4380	1/4
2	2.001—1.999	1.997—1.995	2 7/16	3		¾	18	7-16	2 1/16	.5000—.4990	.2550—.2530	.5015—.5005	1/4
2¼	2.252—2.248	2.245—2.242	2 7/16	3		¾	18	7-16	2 1/16	.5625—.5610	.2962—.2912	.5645—.5630	1/4
2½	2.502—2.498	2.495—2.492	3 1/16	3½	1 1/16	2	16	⅝	3 1/16	.6250—.6235	.3275—.3225	.6270—.6255	3-16
2¾	2.752—2.748	2.745—2.742	3 1/16	3½	1 1/16	2	16	⅝	3 1/16	.6875—.6860	.3587—.3537	.6895—.6880	3-16
3	3.002—2.998	2.995—2.992	3 7/16	4	1 1/16	2	16	⅝	3 1/16	.7500—.7485	.3900—.3850	.7520—.7505	3-16
3½	3.502—3.498	3.495—3.492	4 1/16	4½	1¼	2½	14	¾	3 7/16	.8750—.8735	.4525—.4475	.8770—.8755	1/4
4	4.002—3.998	3.995—3.992	5 1/16	5½	1¼	2½	14	¾	3 7/16	1.0000—.9985	.5150—.5100	1.0020—1.0005	1/4

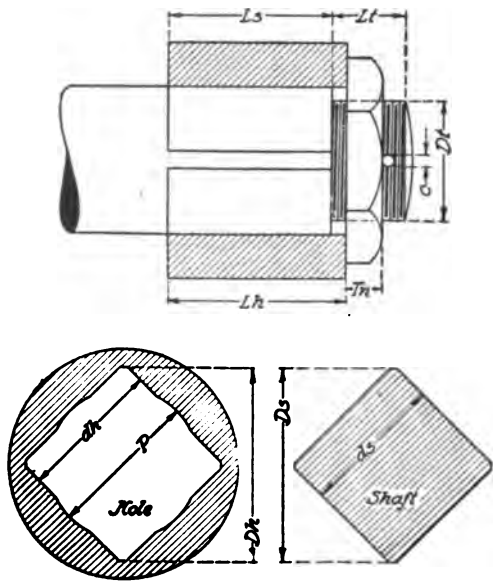

Square Broached Fittings.

SLIP FIT Ds = .73

P.	ds.	dh.	Ds.	Dh.	* Cs.
.257	.248–.247	.250–.249	.3437–.3387	.3537–.3457	2.6
.386	.373–.372	.375–.374	.5156–.5106	.5256–.5176	5.9
33-64	.498–.497	.500–.499	.6875–.6825	.6975–.6895	10.
41-64	.623–.622	.625–.624	.8437–.8387	.8537–.8457	16.
49-64	.748–.747	.750–.749	1.031–1.026	1.051–1.036	23.
29-32	.873–.872	.875–.874	1.187–1.182	1.207–1.192	32.
1 1-32	.998–.997	1.000–.999	1.375–1.370	1.395–1.380	42.
1 5-32	1.123–1.122	1.125–1.124	1.562–1.557	1.582–1.567	53.
1 9-32	1.248–1.247	1.250–1.249	1.687–1.682	1.707–1.692	66.
1 27-64	1.373–1.372	1.375–1.374	1.875–1.870	1.895–1.880	79.
1 35-64	1.498–1.497	1.500–1.499	2.062–2.057	2.082–2.067	94.
1 13-16	1.748–1.747	1.750–1.749	2.375–2.370	2.395–2.380	128.
2 1-16	1.9975–1.9965	2.0000–1.9985	2.750–2.745	2.770–2.755	168.
2 5-16	2.2475–2.2465	2.2500–2.2485	3.062–3.057	3.082–3.067	210.
2 37-64	2.4975–2.4965	2.5000–2.4985	3.437–3.432	3.457–3.442	263.
2 55-64	2.7475–2.7465	2.7500–2.7485	3.750–3.745	3.770–3.755	315.
3 3-32	2.997–2.996	3.000–2.998	4.125–4.120	4.145–4.130	379.
3 39-64	3.497–3.496	3.500–3.498	4.750–4.745	4.770–4.755	514.
4 1/16	3.997–3.996	4.000–3.998	5.500–5.495	5.520–5.505	672.

* Cs—Capacity in feet-pounds per 1 inch length at 1,000 pounds pressure per square inch.

Broached Fittings.

PERMANENT FIT Ds = .80

Nominal Dia.	P.	ds.	dh.	Ds.	Dh.	Ls.	Lh.	Lt.	Dt.	* N.	Tn.	* H.	C.	* Cp.
¼	.193	.1895–.1885	.1875–.1865	.250–.245	.260–.252	5-16	3/16	5-16	3-16	32	5-32	9-32	1-16	...
3/16	.290	.2832–.2822	.2812–.2802	.375–.370	.385–.377	7-16	1/2	7-16	¼	28	7-32	3/16	5-64	...
½	.386	.3770–.3760	.3750–.3740	.500–.495	.510–.502	11-16	3/4	7-16	5-16	24	17-64	½	5-64	49
5/16	33-64	.5020–.5010	.5000–.4990	.625–.620	.635–.627	11-16	3/4	½	½	20	¼	3/16	3-32	67
3/8	37-64	.5645–.5635	.5625–.5615	.750–.745	.760–.752	15-16	1	½	½	20	¼	3/16	3-32	105
7/16	45-64	.6895–.6885	.6875–.6865	.875–.870	.885–.877	1 3/16	1 ¼	5/8	5/8	20	5-16	1	1/8	130
1	27-32	.8155–.8145	.8125–.8115	1.000–.995	1.020–1.005	1 3/16	1 ½	5/8	3/8	20	5-16	1	1/8	175
1 1/16	29-32	.8780–.8770	.8750–.8740	1.125–1.120	1.145–1.130	1 3/16	1 ½	5/8	3/8	20	5-16	1	1/8	250
1 ¼	1 1-32	1.003–1.002	1.000–.999	1.250–1.245	1.270–1.255	1 3/16	1 ½	5/8	1	20	5-16	1 3/16	1/8	260
1 3/16	1 5-32	1.128–1.127	1.125–1.124	1.375–1.370	1.395–1.380	1 7/16	2	5/8	1	20	5-16	1 3/16	1/8	300
1 ½	1 5-32	1.128–1.127	1.125–1.124	1.500–1.495	1.520–1.505	1 7/16	2	5/8	1	20	5-16	1 3/16	1/8	450
1 ¾	1 27-64	1.378–1.377	1.375–1.374	1.750–1.745	1.770–1.755	2 1/16	2 ¼	3/4	1 ¼	18	7-16	2 1/16	1/8	540
2	1 35-64	1.504–1.503	1.5000–1.4985	2.000–1.995	2.020–2.005	2 7/16	3	3/4	1 ¼	18	7-16	2 1/16	1/8	800
2 ¼	1 13-16	1.754–1.753	1.7500–1.7485	2.250–2.245	2.270–2.255	2 7/16	3	3/4	1 ¼	18	7-16	2 1/16	1/8	940
2 ½	2 1-16	2.004–2.003	2.0000–1.9985	2.500–2.495	2.520–2.505	3 1/16	3 ½	1 1/16	2	16	9/16	3 1/16	3-16	1050
2 ¾	2 5-16	2.254–2.253	2.2500–2.2485	2.750–2.745	2.770–2.755	3 1/16	3 ½	1 1/16	2	16	9/16	3 1/16	3-16	1250
3	2 37-64	2.504–2.503	2.500–2.498	3.000–2.995	3.020–3.005	3 7/16	4	1 1/16	2	16	9/16	3 1/16	3-16	1500
3 ½	2 55-64	2.754–2.753	2.750–2.748	3.500–3.495	3.520–3.505	4 1/16	4 ½	1 ¼	2 ½	14	¾	3 7/16	¼	2200
4	3 23-64	3.254–3.253	3.250–3.248	4.000–3.995	4.020–4.005	5 1/16	5 ½	1 ¼	2 ½	14	¾	3 7/16	¼	2800

* N—Number of threads per inch. * H—Short diameter of nut. * Cp— Capacity in feet-pounds per 1 inch length at 10,000 pounds pressure per square inch.

S. A. E. Six Spline Fittings.

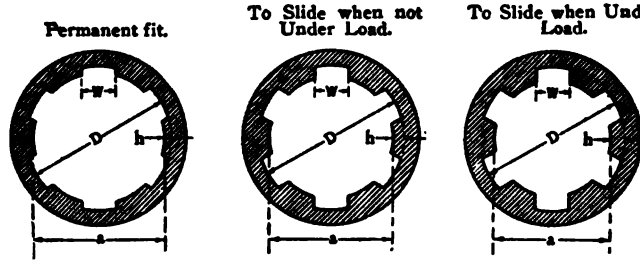

6—A.
w = .25 D
h = .05 D
a = .90 D

6—B.
w = .25 D
h = .075 D
a = .88 D

6—C.
w = .25 D
h = .10 D
a = .80 D

Nominal diameter.	D.	a.	w.	T.	D.	a.	w.	T.	D.	a.	w.	T.
	.750	.675	.188		.750	.638	.188		.750	.600	.188	
¾.....				80				117				152
	.749	.674	.187		.749	.687	.187		.749	.599	.187	
	.875	.788	.219		.875	.744	.219		.875	.700	.219	
⅞.....				109				159				207
	.874	.787	.218		.874	.743	.218		.874	.699	.218	
	1.000	.900	.250		1.000	.850	.250		1.000	.800	.250	
1				143				208				270
	.999	.899	.249		.999	.849	.249		.999	.799	.249	
	1.125	1.013	.281		1.125	.956	.281		1.125	.900	.281	
1⅛.....				180				263				342
	1.124	1.012	.280		1.124	.955	.280		1.124	.899	.280	
	1.250	1.125	.313		1.250	1.063	.313		1.250	1.000	.313	
1¼.....				223				325				421
	1.249	1.124	.312		1.249	1.062	.312		1.249	.999	.312	
	1.375	1.238	.344		1.375	1.169	.344		1.375	1.100	.344	
1⅜.....				269				393				510
	1.374	1.237	.343		1.374	1.168	.343		1.374	1.099	.343	
	1.500	1.350	.375		1.500	1.275	.375		1.500	1.200	.375	
1½.....				321				468				608
	1.499	1.349	.374		1.499	1.274	.374		1.499	1.199	.374	
	1.625	1.463	.406		1.625	1.381	.406		1.625	1.300	.406	
1⅝.....				376				550				713
	1.624	1.462	.405		1.624	1.380	.405		1.624	1.299	.405	
	1.750	1.575	.438		1.750	1.488	.438		1.750	1.400	.438	
1¾.....				436				637				827
	1.749	1.574	.437		1.749	1.487	.437		1.749	1.399	.437	
	2.000	1.800	.500		2.000	1.700	.500		2.000	1.600	.500	
2				570				833				1,080
	1.998	1.798	.498		1.998	1.698	.498		1.998	1.598	.498	
	2.250	2.025	.563		2.250	1.913	.563		2.250	1.800	.563	
2¼.....				721				1,052				1,367
	2.248	2.023	.561		2.248	1.913	.561		2.248	1.798	.561	
	2.500	2.250	.625		2.500	2.125	.625		2.500	2.000	.625	
2½.....				891				1,300				1,688
	2.498	2.248	.623		2.498	2.123	.623		2.498	1.998	.623	
	3.000	2.700	.750		3.000	2.550	.750		3.000	2.400	.750	
3				1,283				1,873				2,430
	2.998	2.698	.748		2.998	2.548	.748		2.998	2.398	.748	

$T = 1.000 \times 6 \times \text{mean } R \times h \times 1 =$ inch-pounds torque capacity per inch; bearing length at 1,000 lbs. pressure per square inch on sides of splines. No allowance is made for radii on corners nor for clearances.

S. A. E. Ten Spline Fittings.

Permanent fit.

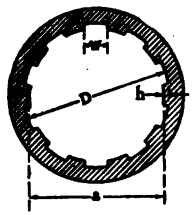

10—A
w = .156 D
h = .045 D
a = .91 D

To Slide when not Under Load.

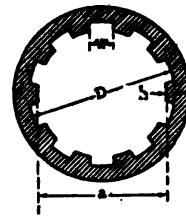

10—B.
w = .156 D
h = .07 D
a = .86 D

To Slide when Under Load.

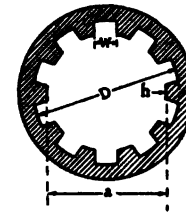

10—C.
w = .156 D
h = .095 D
a = .81 D

Nominal diameter.	D.	a.	w.	T.	D.	a.	w.	T.	D.	a.	w.	T.
	.750	.683	.117		.750	.645	.117		.750	.608	.117	
¾.....	—	—	—	120	—	—	—	183	—	—	—	241
	.749	.682	.116		.749	.644	.116		.749	.607	.116	
	.875	.796	.137		.875	.753	.137		.875	.709	.137	
⅞.....	—	—	—	165	—	—	—	248	—	—	—	339
	.874	.795	.136		.874	.752	.136		.874	.708	.136	
	1.000	.910	.156		1.000	.860	.156		1.000	.810	.156	
1	—	—	—	215	—	—	—	326	—	—	—	430
	.999	.909	.155		.999	.859	.155		.999	.809	.155	
	1.125	1.024	.176		1.125	.968	.176		1.125	.911	.176	
1⅛.....	—	—	—	271	—	—	—	412	—	—	—	545
	1.124	1.023	.175		1.124	.967	.175		1.124	.910	.175	
	1.250	1.138	.195		1.250	1.075	.195		1.250	1.013	.195	
1¼.....	—	—	—	336	—	—	—	508	—	—	—	672
	1.249	1.137	.194		1.249	1.074	.194		1.249	1.012	.194	
	1.375	1.251	.215		1.375	1.183	.215		1.375	1.114	.215	
1⅜.....	—	—	—	406	—	—	—	614	—	—	—	813
	1.374	1.250	.214		1.374	1.182	.214		1.374	1.113	.214	
	1.500	1.365	.234		1.500	1.290	.234		1.500	1.215	.234	
1½.....	—	—	—	483	—	—	—	732	—	—	—	967
	1.499	1.364	.233		1.499	1.289	.233		1.499	1.214	.233	
	1.625	1.479	.254		1.625	1.398	.254		1.625	1.316	.254	
1⅝.....	—	—	—	566	—	—	—	860	—	—	—	1,135
	1.624	1.478	.253		1.624	1.397	.253		1.624	1.315	.253	
	1.750	1.593	.273		1.750	1.505	.273		1.750	1.418	.273	
1¾.....	—	—	—	658	—	—	—	997	—	—	—	1,316
	1.749	1.592	.272		1.749	1.504	.272		1.749	1.417	.272	
	2.000	1.820	.312		2.000	1.720	.312		2.000	1.620	.312	
2	—	—	—	860	—	—	—	1,302	—	—	—	1,720
	1.998	1.818	.310		1.998	1.718	.310		1.998	1.618	.310	
	2.250	2.048	.351		2.250	1.935	.351		2.250	1.823	.351	
2¼.....	—	—	—	1,088	—	—	—	1,647	—	—	—	2,176
	2.248	2.046	.349		2.248	1.933	.349		2.248	1.821	.349	
	2.500	2.275	.390		2.500	2.150	.390		2.500	2.025	.390	
2½.....	—	—	—	1,343	—	—	—	2,034	—	—	—	2,688
	2.498	2.273	.388		2.498	2.148	.388		2.498	2.023	.388	
	3.000	2,730	.468		3.000	2.580	.468		3.000	2.430	.468	
3	—	—	—	1,934	—	—	—	2,929	—	—	—	3,869
	2.998	2.728	.466		2.998	2.578	.466		2.998	2.428	.466	

T = 1,000 × 10 × mean R × h × 1 = inch-pounds torque capacity per inch; bearing length at 1,000 lbs. pressure per square inch on sides of splines. No allowance is made for radii on corners nor for clearances.

S. A. E. Four Spline Fittings.

Permanent Fit

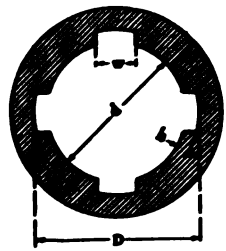

4-A
w equals .241 D
h equals .075 D
d equals .880 D

To Slide when not under Load

4-B
w equals .241 D
h equals .125 D
d equals .749 D

Nom. Dia.	D	a	w	h	T	D	a	w	h	T
¾	.750	.637	.181	.056	78	.750	.562	.181	.094	123
	.749	.636	.180	.055		.749	.561	.180	.093	
⅞	.875	.744	.211	.056	107	.875	.656	.211	109	167
	.874	.742	.210	065		.874	.655	.210	108	
1	1.000	.850	.241	075	139	1.000	.750	.241	.125	219
	.999	.849	.240	.074		.999	.749	.240	.124	
1⅛	1.125	.956	.271	084	175	1.125	.844	.271	.141	277
	1.124	.955	.270	.083		1.24	.843	.270	.140	
1¼	1.250	1.062	.301	.094	217	1.250	.937	.301	.156	341
	1.249	1.061	.300	.093		1.249	.936	.300	.155	
1⅜	1.375	1.169	.331	.103	262	1.375	1.031	.331	.172	414
	1.374	1.168	.330	.102		1.374	1.030	.330	171	
1½	1.500	1.275	.361	.112	311	1.500	1.125	.361	.187	491
	1.499	1.274	.360	.111		1.499	1.124	.300	.186	
1⅝	1.625	1.381	.391	.122	367	1.625	1.219	.391	.203	577
	1.624	1.380	.390	.121		1.624	1.218	.390	.202	
1¾	1.750	1.487	.422	.131	424	1.750	1.312	.422	.219	670
	1.749	1.486	.421	.130		1.749	1.311	.421	.218	
2	2.000	1.700	.482	150	555	2.000	1.500	.482	.250	875
	1.998	1.698	.480	.148		1.998	1.498	.480	.248	
2¼	2.250	1.912	.542	.169	703	2.250	1.687	.542	.281	1106
	2.248	1.910	.540	.167		2.248	1.685	.540	.279	
2½	2.500	2.125	.602	.187	865	2.500	1.875	.602	.312	1365
	2.498	2.123	.600	.185		2.498	1.873	.600	.310	
3	3.000	2.550	.723	.225	1249	3.000	2.250	.723	.375	1969
	2.998	2.548	.721	.223		2.998	2.248	.721	.373	

T equals 1000 x 4 x Mean R x h x 1 equals inch-pounds torque capacity per inch bearing length at 1000 lbs. pressure per square inch on sides of splines. No allowance is made for radii on corners nor for clearances.

S. A. E. Standard Lock Washers.

AUTOMOBILE HEAVY (FOR GENERAL USE).

Bolt Diameter, Inches.	Lock Washer Section, Inches.	Bolt Diameter, Inches.	Lock Washer Section, Inches.
3/16	1/16x1/16	11/16	¼x¼
¼	5/64x5/64	¾	¼x¼
5/16	⅛x⅛	⅞	17/64x17/64
⅜	⅛x⅛	1	5/16x5/16
7/16	11/64x11/64	1⅛	5/16x5/16
½	11/64x11/64	1¼	⅜x⅜
9/16	13/64x13/64	1⅜	⅜x⅜
⅝	13/64x13/64	1½	7/16x7/16

AUTOMOBILE LIGHT (FOR OPTIONAL USE AGAINST SOFT METAL).

Bolt Diameter, Inches.	Lock Washer Section, Inches.	Bolt Diameter, Inches	Lock Washer Section, Inches.
3/16	1/16x3/64	9/16	13/64x5/32
¼	5/64x1/16	⅝	13/64x5/32
5/16	⅛x3/32	11/16	¼x3/16
⅜	⅛x3/32	¾	¼x3/16
7/16	11/64x⅛	⅞	17/64x3/16
½	11/64x⅛	1	5/16x¼

The outside diameters of lock washers shall coincide practically with the long diameters of S. A. E. standard nuts, which are approximately the same as the short diameters of U. S. standard nuts. The inside diameters of the lock washers shall be from one-sixty-fourth to one-thirty-second inch larger than the bolt diameters. The lock washers shall be parallel-faced sections, and bulging or malformed ends must be avoided.

Temper Test.—After compression to flat, reaction shall be sufficient to indicate necessary spring power, and on a subsequent compression to flat, the lock washer shall manifest no appreciable loss in reaction.

Toughness Test.—Forty-five per cent. of the lock washer, including one end, shall be firmly secured in a vise, and 45 per cent., including the other end, shall be secured firmly between parallel jaws of a wrench. Movement of the wrench at right angles to the helical curve shall twist the lock washer through 45 degrees without sign of fracture, and movement of not more than 135 degrees shall twist the lock washer entirely apart.

Light Series of Radial Ball Bearings.

No. of Bearing.	—Bore.— Mm.	Inches.	Diameter. Mm.	Inches.	—Width.— Mm.	Inches.	Corner at Bore of Inner Race. Mm.	Inches.	Radial Load in Lbs.
200	10	0.39370	30	1.18110	9	0.35433	1	0.04	120
201	12	0.47244	32	1.25984	10	0.39370	1	0.04	140
202	15	0.59055	35	1.37795	11	0.43307	1	0.04	160
203	17	0.66929	40	1.57481	12	0.47244	1	0.04	250
204	20	0.78740	47	1.85040	14	0.55118	1	0.04	320
205	25	0.98425	52	2.04725	15	0.59055	1	0.04	350
206	30	1.18110	62	2.44095	16	0.62992	1	0.04	550
207	35	1.37795	72	2.83465	17	0.66929	1	0.04	600
208	40	1.57481	80	3.14962	18	0.70866	2	0.08	860
209	45	1.77166	85	3.34647	19	0.74803	2	0.08	950
210	50	1.96851	90	3.54332	20	0.78740	2	0.08	1000
211	55	2.16536	100	3.93702	21	0.82677	2	0.08	1160
212	60	2.36221	110	4.33072	22	0.86614	2	0.08	1550
213	65	2.55906	120	4.72443	23	0.90551	2	0.08	1670
214	70	2.75591	125	4.92128	24	0.94488	2	0.08	1820
215	75	2.95277	130	5.11813	25	0.98425	2	0.08	2130
216	80	3.14962	140	5.51183	26	1.02362	3	0.12	2650
217	85	3.34647	150	5.90554	28	1.10236	3	0.12	2850
218	90	3.54332	160	6.29924	30	1.18110	3	0.12	3400
219	95	3.74017	170	6.69294	32	1.25984	3	0.12	3750
220	100	3.93702	180	7.08664	34	1.33858	3	0.12	3950
221	105	4.13387	190	7.48035	36	1.41732	3	0.12	4600
222	110	4.33072	200	7.87405	38	1.49607	3	0.12	5000

Heavy Series of Radial Ball Bearings.

No. of Bearing.	—Bore.— Mm.	Inches.	Diameter. Mm.	Inches.	—Width.— Mm.	Inches.	Corner at Bore of Inner Race. Mm.	Inches.	Radial Load in Lbs.
403	17	0.66929	62	2.44095	17	0.66929	1	0.04	850
404	20	0.78740	72	2.83465	19	0.74803	2	0.08	1050
405	25	0.98425	80	3.14962	21	0.82677	2	0.08	1320
406	30	1.18110	90	3.54332	23	0.90551	2	0.08	1600
407	35	1.37799	100	3.93702	25	0.98425	2	0.08	1900
408	40	1.57481	110	4.33072	27	1.06299	2	0.08	2200
409	45	1.77166	120	4.72443	29	1.14173	2	0.08	2500
410	50	1.96851	130	5.11813	31	1.22047	2	0.08	3400
411	55	2.16536	140	5.51183	33	1.29921	3	0.12	3900
412	60	2.36221	150	5.90554	35	1.37795	3	0.12	4400
413	65	2.55906	160	6.29924	37	1.45669	3	0.12	4900
414	70	2.75591	180	7.08664	42	1.65355	3	0.12	6200
415	75	2.95277	190	7.48035	45	1.77166	3	0.12	6600
416	80	3.14962	200	7.87405	48	1.88977	3	0.12	7300
417	85	3.34647	210	8.26775	52	2.04725	3	0.12	8580
418	90	3.54332	225	8.85830	54	2.12599	3	0.12	10000
419	95	3.74017	250	9.84256	55	2.16536	3	0.12	11880
420	100	3.93702	265	10.43311	60	2.36221	3	0.12	14,000

Medium Series of Radial Ball Bearings.

No. of Bearing.	—Bore.— Mm.	Inches.	Diameter. Mm.	Inches.	—Width.— Mm	Inches.	Corner at Bore of Inner Race. Mm.	Inches.	Radial Load in lbs.
300	10	0.39370	35	1.37795	11	0.43307	1	0.04	200
301	12	0.47244	37	1.45669	12	0.47244	1	0.04	240
302	15	0.59055	42	1.65355	13	0.51181	1	0.04	280
303	17	0.66929	47	1.85040	14	0.55118	1	0.04	370
304	20	0.78740	52	2.04725	15	0.59055	1	0.04	440
305	25	0.98425	62	2.44095	17	0.66929	1	0.04	620
306	30	1.18110	72	2.83465	19	0.74803	2	0.08	860
307	35	1.37795	80	3.14962	21	0.82677	2	0.08	1100
308	40	1.57481	90	3.54332	23	0.90551	2	0.08	1450
309	45	1.77166	100	3.93702	25	0.98425	2	0.08	1750
310	50	1.96851	110	4.33072	27	1.06299	2	0.08	2100
311	55	2.16536	120	4.72443	29	1.14173	2	0.08	2400
312	60	2.36221	130	5.11813	31	1.22047	2	0.08	2800
313	65	2.55906	140	5.51183	33	1.29921	3	0.12	3300
314	70	2.75591	150	5.90554	35	1.37795	3	0.12	4000
315	75	2.95277	160	6.29924	37	1.45669	3	0.12	4400
316	80	3.14962	170	6.69294	39	1.53544	3	0.12	5000
317	85	3.34647	180	7.08664	41	1.61418	3	0.12	5700
318	90	3.54332	190	7.48035	43	1.69292	3	0.12	6400
319	95	3.74017	200	7.87405	45	1.77166	3	0.12	7000
320	100	3.93702	215	8.46460	47	1.85040	3	0.12	7700
321	105	4.13387	225	8.85830	49	1.92914	3	0.12	8400
322	110	4.33072	240	9.44886	50	1.96851	3	0.12	10000

S. A. E. Tolerances for Radial Ball Bearings.

Bearing Numbers.	Outer Race Diameter. Plus Limits.	Minus Limits.	Total Limits.	——Bore.—— Plus Limits.	Minus Limits.	Total Limits.	——Width.—— Plus Limits.	Minus Limits.	Total Limits.
200 to 204	0	.0006	.0006	.0002	.0004	.0006	0	.002	.002
300 to 303	0	.0006	.0006	.0002	.0004	.0006	0	.002	.002
205 to 215	0	.0008	.0008	.0002	.0004	.0006	0	.002	.002
304 to 316	0	.0008	.0008	.0002	.0004	.0006	0	.002	.002
403 to 411	0	.0008	.0008	.0002	.0004	.0006	0	.002	.002
217 to 222	0	.0012	.0012	.0002	.0004	.0006	0	.002	.002
314 to 319	0	.0012	.0012	.0002	.0004	.0006	0	.002	.002
412 to 416	0	.0012	.0012	.0002	.0004	.0006	0	.002	.002

S. A. E. Narrow Series Metric Roller Bearings

Bearing Number	BORE				DIAMETER				WIDTH				Chamfer C Not Less Than		Radius R		Eccentricity Tolerance in Inches	
	Mm.	Inches	Tolerance In Inches		Mm.	Inches	Tolerance In Inches		Mm.	Inches	Tolerance In Inches		Mm.	In.	Mm.	In.	Inner Race	Outer Race
			Plus	Minus			Plus	Minus			Plus	Minus						
RM 204	20	.78740	.0002	.0004	47	1.85040	0	.0006	19.05	¾	.020	.020	1	.04	1	.04	.0008	.0012
RM 205	25	.98425	.0002	.0006	52	2.04725	0	.0008	19.05	¾	.020	.020	1	.04	1	.04	.0008	.0012
RM 206	30	1.18110	.0002	.0006	62	2.44095	0	.0008	19.05	¾	.020	.020	1	.04	1	.04	.0008	.0012
RM 207	35	1.37795	.0002	.0006	72	2.83465	0	.0008	22.22	⅞	.020	.020	1	.04	1	.04	.0008	.0012
RM 208	40	1.57481	.0002	.0006	80	3.14962	0	.0008	25.40	1	.020	.020	2	.08	2	.08	.0008	.0012
RM 209	45	1.77166	.0002	.0006	85	3.34647	0	.0008	25.40	1	.020	.020	2	.08	2	.08	.0010	.0016
RM 210	50	1.96851	.0002	.0006	90	3.54332	0	.0008	25.40	1	.020	.020	2	.08	2	.08	.0010	.0016
RM 211	55	2.16536	.0002	.0006	100	3.93702	0	.0008	30.16	1 1/16	.020	.020	2	.08	2	.08	.0010	.0016
RM 212	60	2.36221	.0002	.0006	110	4.33072	0	.0008	34.92	1⅜	.020	.020	2	.08	2	.08	.0010	.0016
RM 213	65	2.55906	.0002	.0006	120	4.72443	0	.0008	34.92	1⅜	.020	.020	2	.08	2	.08	.0010	.0016
RM 214	70	2.75591	.0002	.0006	125	4.92128	0	.0008	36.51	1 7/16	.020	.020	2	.08	2	.08	.0010	.0016
RM 215	75	2.95277	.0002	.0006	130	5.11813	0	.0008	36.51	1 7/16	.020	.020	2	.08	2	.08	.0010	.0016
RM 216	80	3.14962	.0002	.0006	140	5.51183	0	.0008	41.27	1⅝	.020	.020	3	.12	3	12	.0012	.0018
RM 217	85	3.34647	.0002	.0007	150	5.90554	0	.0012	44.45	1¾	.020	.020	3	.12	3	.12	.0012	.0018
RM 218	90	3.54332	.0002	.0007	160	6.29924	0	.0012	50.80	2	.020	.020	3	.12	3	.12	.0012	.0018
RM 219	95	3.74017	.0002	.0007	170	6.69294	0	.0012	55.56	2 1/16	.020	.020	3	12	3	.12	.0012	.0018
RM 220	100	3.93702	.0002	.0007	180	7.08664	0	.0012	60.32	2⅜	.020	.020	3	.12	3	.12	.0012	.0018
RM 221	105	4.13387	.0002	.0007	190	7.48035	0	.0012	65.09	2 9/16	.020	.020	3	.12	3	.12	.0012	.0018
RM 222	110	4.33072	.0002	.0007	200	7.87405	0	.0012	69.85	2¾	.020	.020	3	.12	3	.12	.0012	.0018

S. A. E. Wide Series Metric Roller Bearings.

Bearing Number	BORE				DIAMETER				WIDTH				Chamfer C Not Less Than		Radius R		Eccentricity Tolerance in Inches	
	Mm.	Inches	Tolerance in inches		Mm.	Inches	Tolerance in inches		Mm.	Inches	Tolerance in inches		Mm.	In.	Mm.	In.	Inner Race	Outer Race
			Plus	Minus			Plus	Minus			Plus	Minus						
RM-304	20	.78740	.0002	.0006	52	2.04725	0	.0008	22.22	7/8	.020	.020	1	.04	1	.04	.0008	.0012
RM-305	25	.98425	.0002	.0006	62	2.44095	0	.0008	25.40	1	.020	.020	1	.04	1	.04	.0008	.0012
RM-306	30	1.18110	.0002	.0006	72	2.83465	0	.0008	30.16	1 1/16	.020	.020	2	.08	2	.08	.0008	.0012
RM-307	35	1.37795	.0002	.0006	80	3.14962	0	.0008	34.92	1 3/8	.020	.020	2	.08	2	.08	.0008	.0012
RM-308	40	1.57481	.0002	.0006	90	3.54332	0	.0008	36.51	1 7/16	.020	.020	2	.08	2	.08	.0008	.0012
RM-309	45	1.77166	.0002	.0006	100	3.93702	0	.0008	39.69	1 9/16	.020	.020	2	.08	2	.08	.0010	.0016
RM-310	50	1.96851	.0002	.0006	110	4.33072	0	.0008	44.45	1 3/4	.020	.020	2	.08	2	.08	.0010	.0016
RM-311	55	2.16536	.0002	.0006	120	4.72443	0	.0008	49.21	1 15/16	.020	.020	2	.08	2	.08	.0010	.0016
RM-312	60	2.36221	.0002	.0006	130	5.11813	0	.0008	53.97	2 1/8	.020	.020	2	.08	2	.08	.0010	.0016
RM-313	65	2.55906	.0002	.0006	140	5.51183	0	.0008	58.74	2 5/16	.020	.020	3	12	3	.12	.0010	.0016
RM-314	70	2.75591	.0002	.0007	150	5.90554	0	.0012	63.50	2 1/2	.020	.020	3	.12	3	.12	.0010	.0016
RM-315	75	2.95277	.0002	.0007	160	6.29924	0	.0012	68.26	2 11/16	.020	.020	3	.12	3	.12	.0010	.0016
RM-316	80	3.14962	.0002	.0007	170	6.69294	0	.0012	68.26	2 11/16	.020	.020	3	.12	3	.12	.0012	.0018
RM-317	85	3.34647	.0002	.0007	180	7.08664	0	.0012	73.02	2 7/8	.020	.020	3	.12	3	.12	.0012	.0018
RM-318	90	3.54332	.0002	.0007	190	7.48055	0	.0012	73.02	2 7/8	.020	.020	3	.12	3	.12	.0012	.0018
RM-319	95	3.74017	.0002	.0007	200	7.87406	0	.0012	77.79	3 1/16	.020	.020	3	.12	3	.12	.0012	.0018
RM-320	100	3.93702	.0002	.0007	215	8.46460	0	.0012	82.55	3 1/4	.020	.020	3	.12	3	.12	.0012	.0018

S. A. E. Standard Wheel Dimensions for Solid Tires.

DEMOUNTABLE AND NON-DEMOUNTABLE RIMS.

Single Tires.

Width of felloe and band, ⅜ inch less than sectional size of tire. Thickness of steel band, ¼ inch up to 4½ inch tire; ⅜ inch on 4½ inch and larger tires.

Dual Tires.

Width of felloe and band, twice the sectional size of tire. Thickness of steel band, ⅜ inch for all sizes of tire.

Single and Dual Tires.

	Inches.	Inches.	Inches.	Inches.	Inches.
Sectional size of tire	2	2½	3	3½	4
Minimum felloe thickness	1¼	1¼	1½	1½	1¾
Sectional size of tire	4½	5	5½	6	6½ and over
Minimum felloe thickness	1¾	2	2	2	2⅛

WHEEL DIAMETER OVER STEEL BAND.

Single and Dual Tires.

	Inches.	Inches.	Inches.	Inches.
Nominal outer diam. of tires	30	32	34	36
Wheel diam. over steel band	24	26	28	30
Exact circumference over steel band; neglecting tolerance	75 25/64	81 11/16	87 31/32	94¼

	Inches.	Inches.	Inches.
Nominal outer diam. of tires	38	40	42
Wheel diam. over steel band	32	34	36
Exact circumference over steel band; neglecting tolerance	100 17/32	106 13/16	113 3/32

Allowable Deviation from Precision in Felloe Bands.

	Plus Inches.	Minus Inches.
Tolerance in circumference of band before application	1/32	1/32
Tolerance in circumference of band after application	1/16	1/32
Tolerance of thickness of band	0.006	0.006
Tolerance in radius of band after application	1/16	1/16
Tolerance in width of felloe band—		
Up to and including 4 inches	1/32	1/32
4 1/16 to 6 inches	3/64	3/64
6 1/16 to 12 inches	1/16	1/16

Variation in trueness of band when placed on surface plate—

Band shall touch at all points within 1/32 inch up to and including 6 inch width. Over 6 inch width within 1/16 inch.

MEASURING CIRCUMFERENCE OF BAND.

In measuring circumference of band, if there is not an allowance on the tapeline itself, a correction amounting to three times the thickness of the tapeline should be made.

NOTE.—All of the foregoing summary, so far as pertinent, applies to metal wheels.

BOLT EQUIPMENT FOR SIDE FLANGES.

All Bolts to Be ½ Inch Diameter.

Outside Diameter Bolt Diameter Tire Hole Circle.	Number of Bolts.	Outside Diameter Bolt Diameter Tire Hole Circle.	Number of Bolts.
26..... 18½	6, 9 or 18	42..... 34½	10, 15 or 30
28..... 20½	do.	44..... 36½	12, 18 or 36
30..... 22½	do.	46..... 38½	do.
32..... 24½	8, 12 or 24	48..... 40½	do.
34..... 26½	do.	50..... 42½	14, 21 or 42
36..... 28½	do.	52..... 44½	do.
38..... 30½	10, 15 or 30	54..... 46½	do.
40..... 32½	do.		

Dimensions of Wrought Iron Pipes.

Nominal Diameter, Inches.	Actual Inside Diameter, Inches.	Actual Outside Diameter, Inches.	No. of Threads Per Inch.
⅛	0.27	0.405	27
¼	0.364	0.54	18
⅜	0.494	0.675	18
½	0.623	0.84	14
¾	0.824	1.05	14
1	1.048	1.315	11½
1¼	1.38	1.66	11½
1½	1.61	1.90	11½
2	1.067	2.375	11½
2½	2.468	2.875	8
3	3.067	3.5	8

S. A. E. Steel Specifications.

Spec. No.	C.	Mn.	P.*	S.*	Ni.	Cr.	V.**
			CARBON STEELS.				
1010	.05-.15	.30-.60	.045	.05			
1020	.15-.25	.30-.60	.045	.05			
1025	.20-.30	.50-.80	.045	.05			
1035	.30-.40	.50-.80	.045	.05			
1045	.40-.50	.50-.80	.045	.05			
1095	.90-1.05	.25-.50	.04	.05			
1114‡	.08-.20	.30-.80	.12	.06-.12			
			NICKEL STEELS.				
2315	.10-.20	.50-.80	.04	.05	3.25-3.75		
2320	.15-.25	.50-.80	.04	.045	3.25-3.75		
2330	.25-.35	.50-.80	.04	.045	3.25-3.75		
2335	.30-.40	.50-.80	.04	.045	3.25-3.75		
2340	.35-.45	.50-.80	.04	.045	3.25-3.75		
2345	.40-.50	.50-.80	.04	.045	3.25-3.75		
3120	.15-.25	.50-.80	.04	.045	1.00-1.50	.45-.75	
3125	.20-.30	.50-.80	.04	.045	1.00-1.50	.45-.75	
3130	.25-.35	.50-.80	.04	.045	1.00-1.50	.45-.75	
3135	.30-.40	.50-.80	.04	.045	1.00-1.50	.45-.75	
3140	.35-.45	.50-.80	.04	.045	1.00-1.50	.45-.75	
3220	.15-.25	.30-.60	.04	.04	1.50-2.00	.90-1.25	
3230	.25-.35	.30-.60	.04	.04	1.50-2.00	.90-1.25	
3240	.35-.45	.30-.60	.04	.04	1.50-2.00	.90-1.25	
3250	.45-.55	.30-.60	.04	.04	1.50-2.00	.90-1.25	
X3315	.10-.20	.45-.75	.04	.04	2.75-3.25	.60-.95	
X3335	.30-.40	.45-.75	04	.04	2.75-3.25	.60-.95	
X3350	.45-.55	.45-.75	.04	.04	2.75-3.25	.60-.95	
3320	.15-.25	.30-.60	.04	.04	3.25-3.75	1.25-1.75	
3330	.25-.35	.30-.60	.04	.04	3.25-3.75	1.25-1.75	
3340	.35-.45	.30-.60	.04	.04	3.25-3.75	1.25-1.75	
			CHROME NICKEL STEELS.				
5120	.15-.25	†	.04	.045		.65-.85	
5140	.35-.45	†	.04	.045		.65-.85	
5165	.60-.70	†	.04	.045		.65-.85	
5195	.90-1.05	.20-.45	.03	.03		.90-1.10	
51120	1.10-1.30	.20-.45	.03	.03		.90-1.10	
5295	.90-1.05	20-.45	.03	.03		1.10-1.30	
52120	1.10-1.30	.20-.45	.03	.03		1.10-1.30	
			VANADIUM STEELS.				
6120	.15-.25	.50-.80	.04	.04		.80-1.10	.15
6125	.20-.30	.50-.80	.04	.04		.80-1.10	.15
6130	.25-.35	.50-.80	.04	.04		.80-1.10	.15
6135	.30-.40	.50-.80	.04	.04		.80-1.10	.15
6140	.35-.45	.50-.80	.04	.04		.80-1.10	5
6145	.40-.50	.50-.80	.04	.04		.80-1.10	.15
6150	.45-.55	.50-.80	.04	.04		.80-1.10	.15
6195	.90-1.05	.20-.45	.03	.03		.80-1.10	.15
			SILICO-MANGANESE STEELS.				
9250	.45-.55	.60-.80	.045	.045		1.80-2.10% Si	
9260	.55-.65	.50-.70	.045	.045		1.50-1.80% Si	

* Not to exceed. †Two types of steel are available in this class, viz., one with manganese .25-.50 per cent. and silicon not over .20 per cent.: the other with manganese .60-.80 per cent. and silicon .15-.50 per cent. **Not less than. ‡Screw stock; the amount of sulphur in this case is to be between the limits given.

List of Heat Treatments.

A—After forging or machining carbonize at between 1600° and 1750° F. (1650-1700° F. desired), cool slowly or quench, reheat to 1450°-1500° F. and quench.

B—After forging or machining carbonize at between 1600° and 1750° F. (1650°-1700° desired), cool slowly in the carbonizing mixture, reheat to 1550°-1625° F., quench, reheat to 1400°-1450° F., quench, draw in hot oil at from 300° to 450° F., depending upon the hardness desired.

D—After forging or machining heat to 1500°-1600° F., quench, reheat to 1450°-1500° F., quench, reheat to 600°-1200° F. and cool slowly.

E—After forging or machining heat to 1500°-1550° F., cool slowly, reheat to 1450°-1500° F., quench, reheat to 600°-1200° F. and cool slowly.

F—After shaping or coiling heat to 1425°-1475° F., quench in oil, reheat to 400°-900° F., in accordance with degree of temper desired and cool slowly.

G—Carbonize at between 1600° and 1750° F. (1650°-1700° F. desired), cool slowly in the carbonizing material, reheat to 1500°-1550° F., quench, reheat to 1300°-1400° F., quench, reheat to 250°-500° F. (in accordance with the necessities of the case) and cool slowly.

H—After forging or machining heat to 1500°-1600° F., quench, reheat to 600°-1200° F. and cool slowly.

K—After forging or machining heat to 1500°-1550° F., quench, reheat to 1300°-1400° F., quench, reheat to 600°-1200° F. and cool slowly.

L—After forging or machining carbonizing at a temperature between 1600° and 1750° F. (1650°-1700° desired), cool slowly in the carbonizing mixture, reheat to 1400°-1500° F., quench, reheat to 1300°-1400° F., quench, reheat to 250°-500° F. and cool slowly.

M—After forging or machining heat to 1450°-1500° F., quench, reheat to 500°-1250° F. and cool slowly.

P—After forging or machining heat to 1450°-1500° F., quench, reheat to 1375°-1450° F., quench, reheat to 500°-1250° F. and cool slowly.

Q—After forging heat to 1475°-1525° F., hold at this temperature one-half hour to insure thorough heating, cool slowly, reheat to 1375°-1425° F., quench, reheat to 250°-550° F. and cool slowly.

R—After forging heat to 1500°-1550° F., quench in oil, reheat to 1200°-1300° F., hold at this temperature three hours, cool slowly, machine, heat to 1350°-1450° F., quench in oil, reheat to 250°-500° F. and cool slowly.

S—After forging or machining carbonize at a temperature between 1600° and 1750° F. (1650°-1700° F. desired), cool slowly in the carbonizing mixture, reheat to 1650°-1750° F., quench, reheat to 1475°-1550° F., quench, reheat to 250°-550° F. and cool slowly.

T—After forging or machining heat to 1650°-1750° F., quench, reheat to 500°-1300° F. and cool slowly.

U—After forging heat to 1525°1600° F., hold at this temperature for half an hour, cool slowly, reheat to 1650°-1700° F., quench, reheat to 350°-550° F. and cool slowly.

V—After forging or machining heat to 1650°-1750° F., quench, reheat to 400°-1200° F. and cool slowly.

Heat Treatments For Different Steels.

Specif. No.	Heat Treatments.	Specif. No.	Heat Treatments.
1020	A, B and H	X 3335	P and R
1025	B and H	X 3350	P and R
1035	D, E and H	3320	L
1045	E and H	3330	P and R
1095	F	3340	P and R
2315	G	5120	B
2320	G, H and K	5140	H and D
2330	H and K	5195	P and R
2335	H and K	51120	P and R
2340	H and K	5295	P and R
3120	G, H and D	52120	P and R
3125	H, D and E	6120	S and T
3130	H, D and E	6125	T
3135	H, D and E	6130	T
3140	H, D and E	6135	T
3220	G, H and K	6140	T
3230	H and D	6145	T and U
3240	H and D	6150	U
3250	M and Q	9250	V
X 3315	G and M	9260	V

1917 American Truck Practice.

Cylinder Grouping.

Cast En Bloc	61 %
Cast in Pairs	36.5 %
Cast Singly	2.5 %

Cylinder Types.

L-Head	83 %
T-Head	12.25%
Valve in Head	4 %

Fuel Feed.

Gravity Feed	82.2 %
Vacuum Feed	13.5 %
Pressure Feed	4.3 %

Ignition.

Magneto	95 %
Battery	5 %
Single System	76 %
Double Systems	24 %

Cooling Water Circulation.

By Pump	79.6 %
By Thermo-Syphon	20.4 %

Clutch Types.

Cone	25 %
Dry Disc	64 %
Lubricated Disc	11 %

Number of Forward Speeds.

Three-Speed	79 %
Four-Speed	21 %

Transmission Location.

On Engine	52 %
Midships	47.3 %
On Axle	0.7 %

Axle Types.

Dead Axles	31 %
Live Axles	69 %

Types of Live Axles.

Full Floating	59 %
Three-quarter Floating	7 %
Semi-Floating	34 %

Frames.

Pressed Steel	68 %
Rolled Section Steel	32 %

Steering Gear Location.

Left Hand Side	71 %
Right Hand Side	29 %

Representative Tire Equipment.

Capacity.	Front	Rear
1 Ton	34 x 3½	34 x 4
1½ Tons	36 x 3½	36 x 5
2 Tons	36 x 4	36 x 6
2½ Tons	36 x 4	36 x 4d
3 Tons	36 x 5	36 x 5d
3½ Tons	36 x 5	36 x 5d
4 Tons	36 x 5	36 x 5d
5 Tons	36 x 6	36 x 6d
7 Tons	36 x 6	40 x 7d

American Pleasure Car Practice.

Clutch Types.

	1917	1915	1913
Cone	34 %	50 %	54.2%
Disc	66 %	46.2%	42.2%
Others	—	3.8%	3.6%

Number of Speeds Forward.

	1917	1915	1913
Two	0.7%	3.8%	—
Three	89.5%	69.5%	69.2%
Four	9.8%	26.7%	30.8%

Gear Box Location.

	1917	1915	1913
On Engine	75 %	49.7%	40.4%
Amidships	14.6%	32.7%	44.6%
On Rear Axle	10.4%	17.6%	15.0%

Final Drive.

	1917	1915	1913
Bevel Gear	29.3%	81.9%	—
Helical Bevel Gear	68.0%	12.5%	—
Chain	2.0%	2.5%	—
Worm	—	1.9%	—
Special	0.7%	1.2%	—

Rear Springs.

	1917	1915	1913
Half Elliptic	29.4%	15.2%	10.6%
Three-quarter Elliptic	28.7%	58.2%	69.0%
Elliptic	6.3%	9.3%	9.6%
Platform	3.5%	6.0%	8.4%
Cantilever	29.4%	9.3%	—
Special	—	—	—

Rear Axles.

	1917	1915	1913
Semi-Floating	27.1%	20.9%	21.0%
Three quarter Floating	24.5%	26.8%	10.0%
Seven-eighths Floating	1.4%	—	—
Full Floating	45.0%	52.3%	69.0%
Dead	2.0%	—	—

INDEX.

	PAGE.
Accelerator Pedals	450
Alco Drop Forged Axle	246
Axle Housings	233
Axle Tube Bending Moments	239
Axle Tubes	234
Axle Tubes, Methods of Fitting	235
Axle Tubes, Stresses in	237
Axle Weight Formula	214
Axles, Dead	9
Axles, Live	9
Ball Mounted Control Lever	465
Band Clutch	53
Band Clutch, Sample Calculation of	59
Band Clutch, Effect of Centrifugal Force on	60
Band Clutch, Theory of	56
Bevel Gear Bearing Loads	93
Bevel Gear Blanks, Calculation of	219
Bevel Gear Efficiency	278
Bevel Gear Helical	215
Bevel Gear Pinion Bearings, Mounting of	250
Bevel Gears, Straight	232
Bevel Gears, Grinding in	290
Bevel Gears, Strength of	222
Bevel Gears, Manufacture of Helical	231
Bevel Gears, Thrust Loads on Helical	224
Bevel Pinion Blanks, Turning up	291
Bevel Spur Drive	341
Bowden Wire Mechanism	446
Brake Adjustment	377
Brake Dimensions, Determination of	363
Brake Drums	363
Brake Drums, Securing	534
Brake Equalizers	378
Brake Expanding Mechanism	372
Brake Facing Materials	375
Brake Members, Stresses in	369
Brake Releasing Means	366
Brake Rod Adjustment	470
Brake Rod, Adjustment of	380
Brake Shoes, Air Cooled	367
Brakes, Calculation of Band	369
Brakes, Contracting	364
Brakes, Details of Expanding	375
Brakes, Front Wheel	383

PAGE.
Brakes, Location of..... 358
Brakes, Number of..... 357
Brakes, Service and Emergency..... 360
Brakes and Skidding..... 383
Brakes, Types of..... 357
Braking Power, Calculation of..... 360
Chain Adjusting Rods..... 329
Chain and Sprocket Calculations..... 325
Chain Cases..... 336
Chain Drive..... 323
Chain Pull..... 327
Chain, Construction of..... 323
Chamfering Sliding Gears..... 109
Change Gear Bearing Mounting..... 112
Change Gear Bearing Pressure..... 82
Change Gear Bearing Sizes..... 96
Change Gear Calculation Example..... 80
Change Gear Intermediate Bearings..... 98
Change Gear Layouts..... 76
Change Gear Shaft Dimensions..... 99
Change Gear, History of..... 69
Change Gear, Positive Clutch Type..... 120
Change Gear, Running in of..... 119
Change Gear, Silent Chain Type..... 122
Change Gears, Allowable Stress in..... 78
Change Gears, Manufacture of..... 107
Change Speed Gear, Purpose of..... 7
Clutch and Brake, Interconnection of..... 457
Clutch Brakes..... 30
Clutch Connection to Change Gear..... 66
Clutch Disc Lubrication..... 48
Clutch End Thrust..... 68
Clutch Shaft Dimensions..... 65
Clutch Shifting Collar..... 28
Clutch Spring Inside Shaft..... 47
Clutch Springs..... 27
Clutches, Classification of..... 12
Cone, Angle of..... 14
Cone Clutch Calculation..... 14
Cone Clutch Calculation Chart..... 19
Cone Clutch Centre..... 24
Cone Clutch Engagement Springs..... 22
Cone Clutch, Constructional Details of..... 20
Cone Clutch, Leather, Pattern for..... 21
Cone Clutch Thrust Bearing..... 25
Cone Clutch, Multiple Spring Type..... 23
Cone Clutch, Pressed Steel..... 27
Cone Clutch Types..... 13
Cone Clutches, Unit Normal Pressure in..... 16
Cone Diameter..... 16
Control, Centre..... 460-465
Control Joints..... 449
Control, Left Hand..... 460

PAGE.
Control Lever on Steering Post 447
Control Levers 461
Control Ratchet 441
Control, Single Pedal 458
Control, Selective 464
Control, Spark and Throttle 441
Critical Speeds of Shafts 279
Daimler Worm Driven Axle 320
Differential Bearings 256
Differential Gear, Action of 180
Differential Gear, Calculation of Bevel Type 181
Differential Gear, M. & S. Helical 190
Differential, Gearless Type 191
Differential Gear, Spur Type 187
Differential Gear, Purpose of 6
Differential Lock 192
Direct Drive Clutch 102
Disc Clutch Calculating Chart 41
Disc Clutch Constructional Details 43
Disc Clutch Data 38
Disc Clutch Inner Drum 44
Disc Clutch Materials 38
Disc Clutch Presser 45
Disc Clutch Types 33
Disc Clutch, Calculation of 35
Disc Separating Means 42
Drive, Double Reduction 8
Drive, Single Reduction 8
Drop Forged Rear Axle 247
Dux Positive Clutch Gear 123
Elliott Type Steering Head 391
Expanding Clutch 62
Fender Brackets 493
Fiat Pressed Steel Axle 243
Floating Bushings 542
Fluted Shafts, Tests of 211
Ford Planetary Gear 138
Ford Pressed Steel Axle 246
Four Wheel Drives 5-351
Frame Cross Members 480
Frame In-sweep 473
Frame Joints 482
Frame Materials 471
Frame Rail Calculation 475
Frame Rails, Bending Moments on 476
Frame Sections 479
Frame Sections, Section Moduli of 480
Frame Steel Gauge 471
Frame Trusses 485
Frames, Drop 473
Frames, Purpose of 10
Frames, Underslung 483
Frames, Wood Sill 484
Friction Clutch, Purpose of 7

PAGE.
Friction Disc and Wheel, Dimensions of 153
Friction Disc Drive, Thrusts and Reactions in 158
Friction Drive Efficiency 151
Friction Drive, Types of 147
Friction Drive Materials 150
Friction Lever Control 443
Friction Wheel and Disc, Engaging Means for 156
Friction Wheel Applying Mechanism 157
Friction Wheel Sliding Mechanism 155
Friction, Laws of 38
Friction, Coefficients of 15
Front Axle Section Diagram 389
Front Axles, I-Section 388
Front Axles, Manufacture of 408
Front Axles, Stresses on 386
Front Axles, Tubular and Pressed Steel 408
Front Axles, Weight on 387
Front Mounted Flywheel 199
Front Wheel Bearings 397
Front Wheel Bearings, Mounting of 399
Front Wheel Drive 5
Front Wheel Thrust Loads 398
Gear Box Lubrication 119
Gear Calculation for Strength 77
Gear Carrier 245
Gear Cases 115
Gear Material 72
Gear Motion, Cause of Non-Uniform 215
Gear Reduction Ratios 75
Gear Supporting Methods 118
Gear Teeth, Form of 77
Gear Tester 110
Geared-up Fourth Speed 114
Governor Control Linkage 452
Hele-Shaw Clutch 46
Helical Bevel Gears 215
Hub Caps 535
Internal Gear Drive 348
Jackshaft 340
La Buire Arched Axle 249
Lamp Brackets 495
Lemoine Type Steering Head 394
Levassor Sliding Gear 70
Locking Device, Ball Wedge 443
Maybach's Selective Gear 71
Midland Three Point Support 197
Motor, Location of 3
Panhard Brake 376
Pedal Pads 456
Pedals 453
Pedals, Adjustable 455
Pedal Shaft Assembly 460
Peerless Arched Axle 248
Pitch Line Velocity 78
Planetaries, Calculation of All Spur Type 141

PAGE.
Planetary, All Spur Type ... 131
Planetary, Assembly of All Spur Type ... 136
Planetary, Assembly of Internal Gear Type ... 134
Planetary, Internal Gear Type ... 125
Planetary Gear, Calculation of Speed Ratios ... 126
Planetary Gear Efficiency ... 145
Planetary Gears, Bearing Pressures in ... 138
Planetary Gears, Brakes for ... 143
Planetary Gears, Constructional Details of ... 143
Planetary Gears, Gear Stresses in ... 138
Planetary Pinions, Required Number of Teeth in ... 130
Plate Clutch, Dry ... 48
Plate Clutch, Three ... 50
Power Plant, Spring Suspension of ... 3
Pressed Steel Rear Axles ... 243
Quadrants ... 467
Quadrant Designs, Standard S. A. E. ... 468
Quickest Stop, Conditions Insuring the ... 361
Radiator Brackets ... 490
Radius Rods, Calculation of ... 332
Reach Bar or Perch ... 10
Rear Axle Bearing Adjustment ... 257
Rear Axle Bearing Pressure ... 250
Rear Axle Bearing Housings ... 233
Rear Axle Bearings ... 249
Rear Axle Braces ... 277
Rear Axle Thrust ... 265
Rear Axle Thrust Bearings ... 263
Rear Axle Torsion ... 265
Rear Axle Truss ... 264
Rear Axle, Arched ... 247
Rear Axles, Dead ... 338
Rear Axles, Manufacture of ... 288
Rear Axles, Types of ... 203
Rear Wheel Drive ... 5
Rebound Clips ... 521
Reverse Gear Arrangement ... 100
Reverse Lock-out ... 468
Reversed Elliott Type Steering Head ... 393
Roller Chains, Capacity of ... 324
Rudge-Whitworth Wire Wheel ... 538
Schwarz Interlocking Spokes ... 536
Seitz Friction Drive ... 148
Semi-Floating Axles, Calculation of Shafts for ... 213
Shaft Diameters, Calculation of ... 210
Shaft Joints ... 211
Shaft Materials ... 207
Slider Forks ... 111
Sliding Gear Efficiency ... 120
Sliding Gear Locking Dogs ... 112
Sliding Gear Shaft Front Bearing ... 102
Sliding Gear Shaft ... 104
Sliding Gears, Proportions of ... 105
Slip Joints ... 177

PAGE.
Spoke Dimensions ... 532
Spokes, Number of ... 531
Spokes, Proportions of ... 531
Sprags ... 384
Spring Arch ... 517
Spring Bolts ... 522
Spring Brackets ... 486
Spring Calculation, Sample ... 511
Spring Centre Bands ... 516
Spring Centre Bolts ... 516
Spring Clips ... 518
Spring Eyes ... 522
Spring Leaf Points ... 523
Spring Leaves, Alignment of ... 522
Spring Leaves, Reverse ... 521
Spring Lengths and Widths, Table of ... 505
Spring Lips ... 522
Spring Lubrication ... 526
Spring Material ... 500
Spring Perches ... 518
Spring Plates, Number and Thickness of ... 510
Spring Play on Bevel Gear Drive, Effect of ... 270
Spring Play on Chain Drive, Effect of ... 334
Spring Pressure Blocks ... 520
Spring Shackles ... 522
Spring Steel Gauge ... 507
Springs, Auxiliary ... 526
Springs, Cantilever ... 499
Springs, Eccentrated ... 509
Springs, Flexibility of ... 507
Springs, Inclined ... 524
Springs, Theory of Leaf ... 501
Springs, Torsion and Thrust on ... 525
Springs, Total Deflection Constants of ... 508
Springs, Types of ... 497
Sprocket Wheels, Design of ... 326
Sprockets, Overhanging ... 328
Starting Crank Bracket ... 494
Steering Angles, Chart of ... 418
Steering Arm ... 432
Steering Column ... 438
Steering Column, Adjustable ... 439
Steering Connectors ... 433
Steering Drag Link ... 433
Steering, Four Wheel ... 5
Steering, Front ... 4
Steering, Rear ... 4
Steering Gear Bearings ... 424
Steering Gear, Calculation of Worm and Wheel ... 420
Steering Gear Cases ... 426
Steering Gear, History of ... 411
Steering Gear, Support of ... 431
Steering Gears, Double Screw Adjustable ... 429
Steering Gears, General Arrangement of ... 418

PAGE.
Steering Gears, Reversible and Non-Reversible 419
Steering Gears, Screw and Nut Type 428
Steering Heads 390
Steering Knuckle Arms 403
Steering Mechanism, Bevel Gear 430
Steering Mechanism, Theory of 411
Steerings Pivot Bearings, Calculation of 394
Steering Pivot, Inclined 396
Steering Problem, Analytic Solution of 415
Steering Problem, Graphical Solution of 412
Steering Shaft 424
Steering Spindle Diameter 402
Steering Stops 402
Steering Spindle "Set" 401
Steering Tie Rod 405
Steering Tie Rod Connectors 407
Steering Wheel 435
Step Hangers 494
Straight Line Drive 202
Stub Tooth 77
Sub Frames 481
Swiveled Gear Box 201
Three Point Support 195
Throttle Linkage 451
Timken Brake 377
Timken Pressed Steel Axle 244
Torque Rod Supports 276
Torque Rods 274
Torque Tubes 266
Torque Tube Supports 268
Trailer Steering Axle 396
Transmission Axles 199
Transmission Brakes 367
Tread 10
Truck Bumpers 491
Unit Power Plants 193
Universal Joint, Anti-Friction Bearing 176
Universal Joint, Calculation of Block and Trunnion Type 173
Universal Joint, Calculation of Forked Type 169
Universal Joint, Dust Protection of 174
Universal Joint, Lubrication of 174
Universal Joint Sheet Metal Housing 175
Universal Joint, Square Block Type 168
Universal Joints, Leather Disc Type 177
Universal Joints, Proper Angular Relation of Double 168
Universal Joints, Speed Fluctuations in 163
Universal Joints, Types of 160
Weights of Commercial Cars 387
Wheel Base 10
Wheel Bearings 258
Wheel Bearings, Mounting of 260
Wheel Diameters 528
Wheel Hubs 533
Wheel Material, Wood 528

PAGE.

Wheels, Artillery 528
Wheels, Cast Steel 540
Wheels, Manufacture of 537
Wheels, Number of 4
Wheels, Wire 537
Worm Driven Axle Design 316
Worm Drive, Advantages of 293
Worm Drive, History of 293
Worm Drive Axle Tube Dimensions, Calculation of 318
Worm Gear Efficiency 298
Worm Gear Efficiency Tests 305
Worm Gear Formulae, Application of 309
Worm Gear, Hindley Type 312
Worm Gear Housings 316
Worm Gear Load Capacity, Calculation of 302
Worm Gear Material 310
Worm Gear Radial Bearing Loads 301
Worm Gear Thrust Bearing Loads 300
Worm Gearing, Theory of 294
Worm Gears, Axial Pitch of 296
Worm Gears, Centre Distance of 302
Worm Gears, Pressure Angle of 295
Worm, Mounting of 315
Worm Top Mounted and Bottom Mounted 314
Worms, Hardening and Polishing of 310

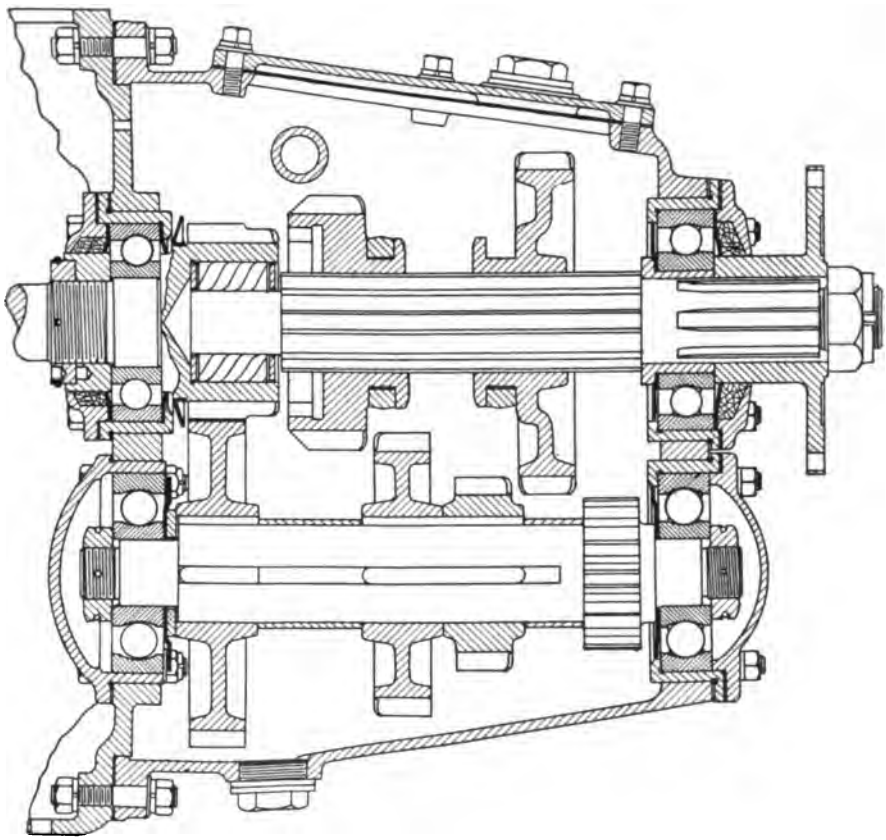

CHANGE SPEED GEAR OF THE PACKARD TWELVE.

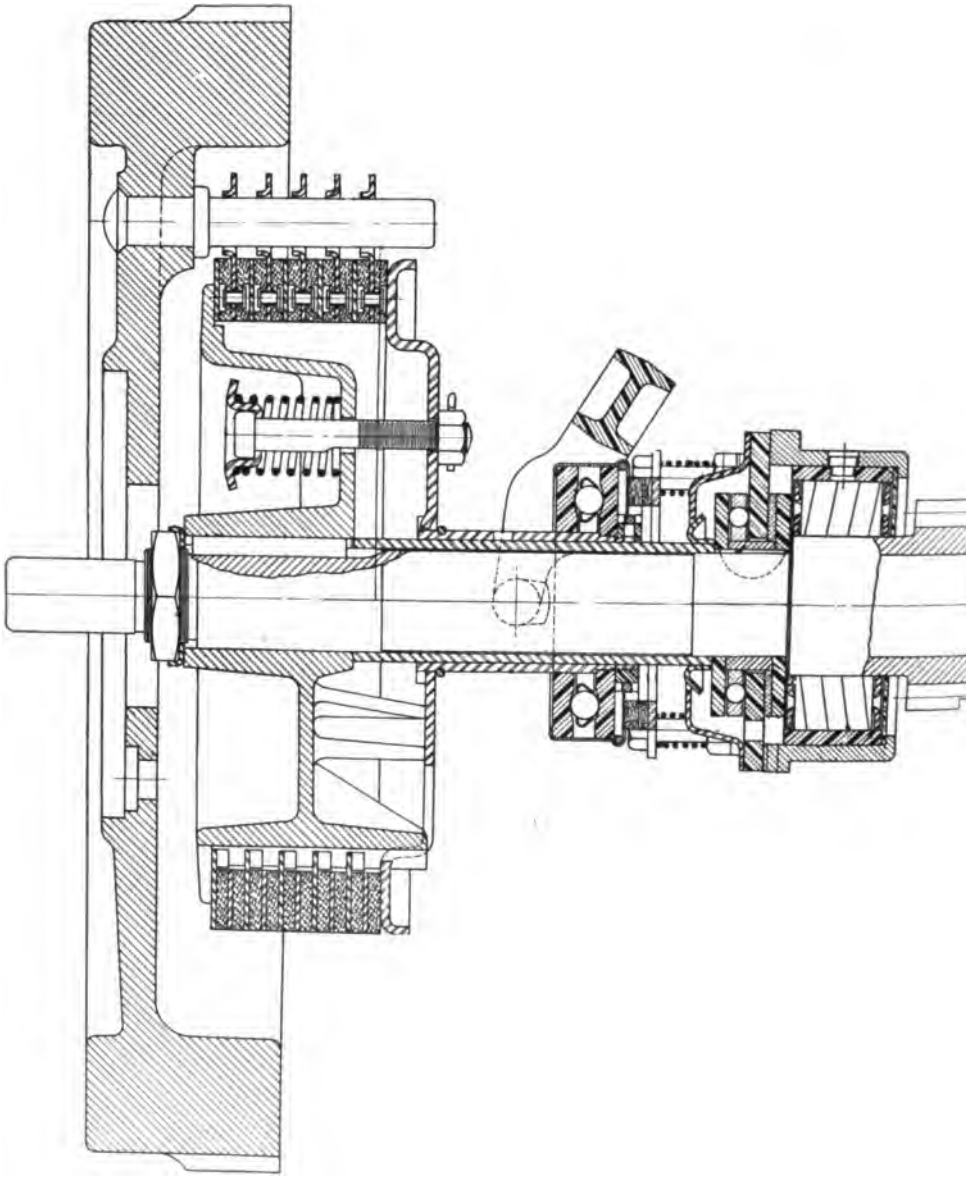

DRY DISC CLUTCH OF CHALMERS 6-30.

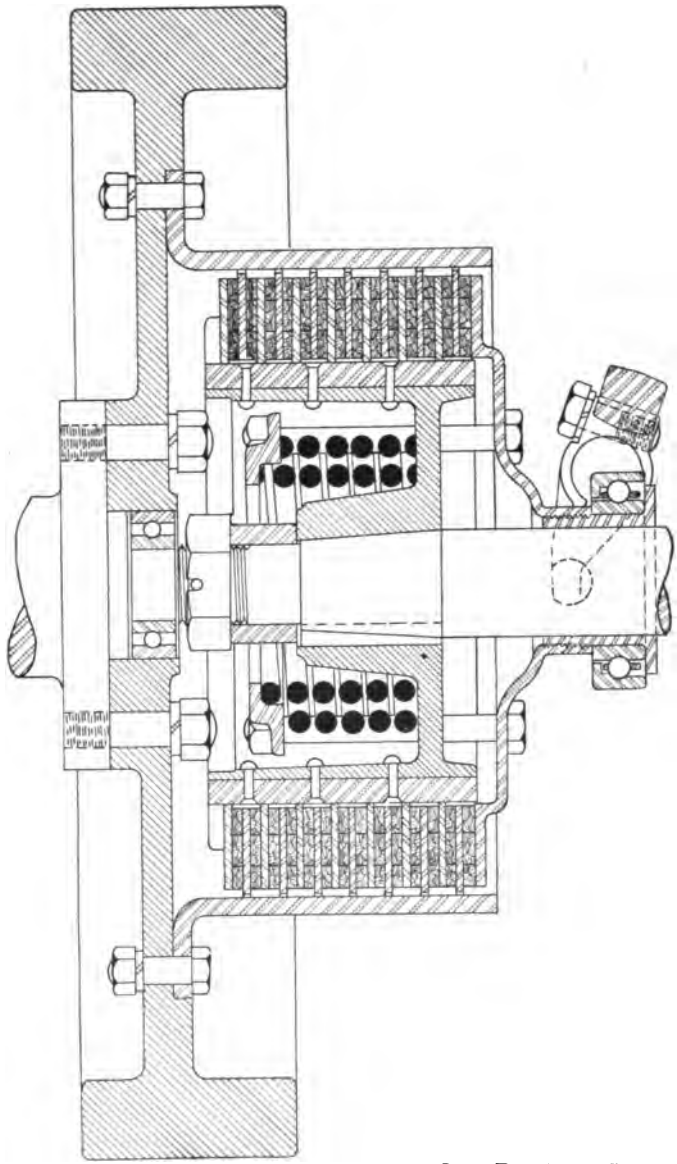

BROWN-LIPE DRY DISC CLUTCH
ON CUNNINGHAM CAR.

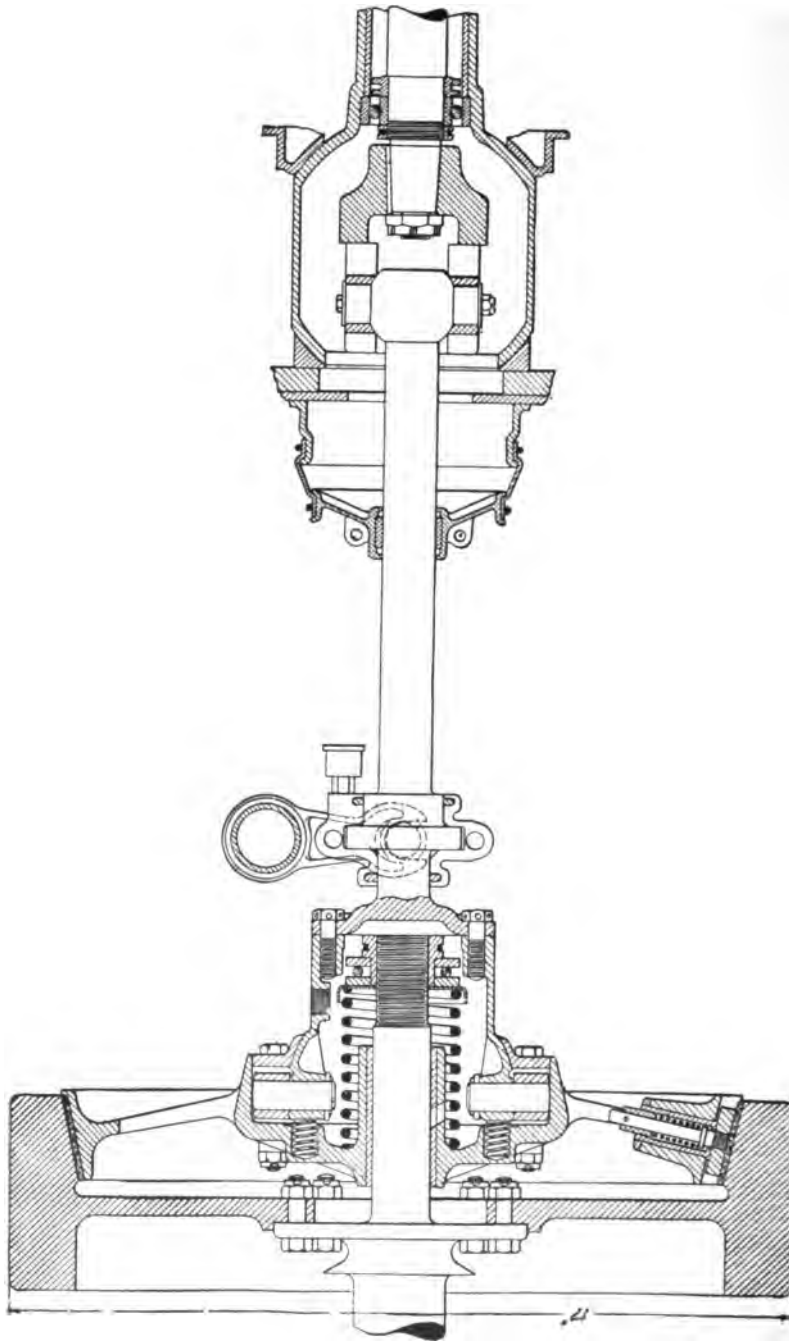

MARMON CONE CLUTCH.

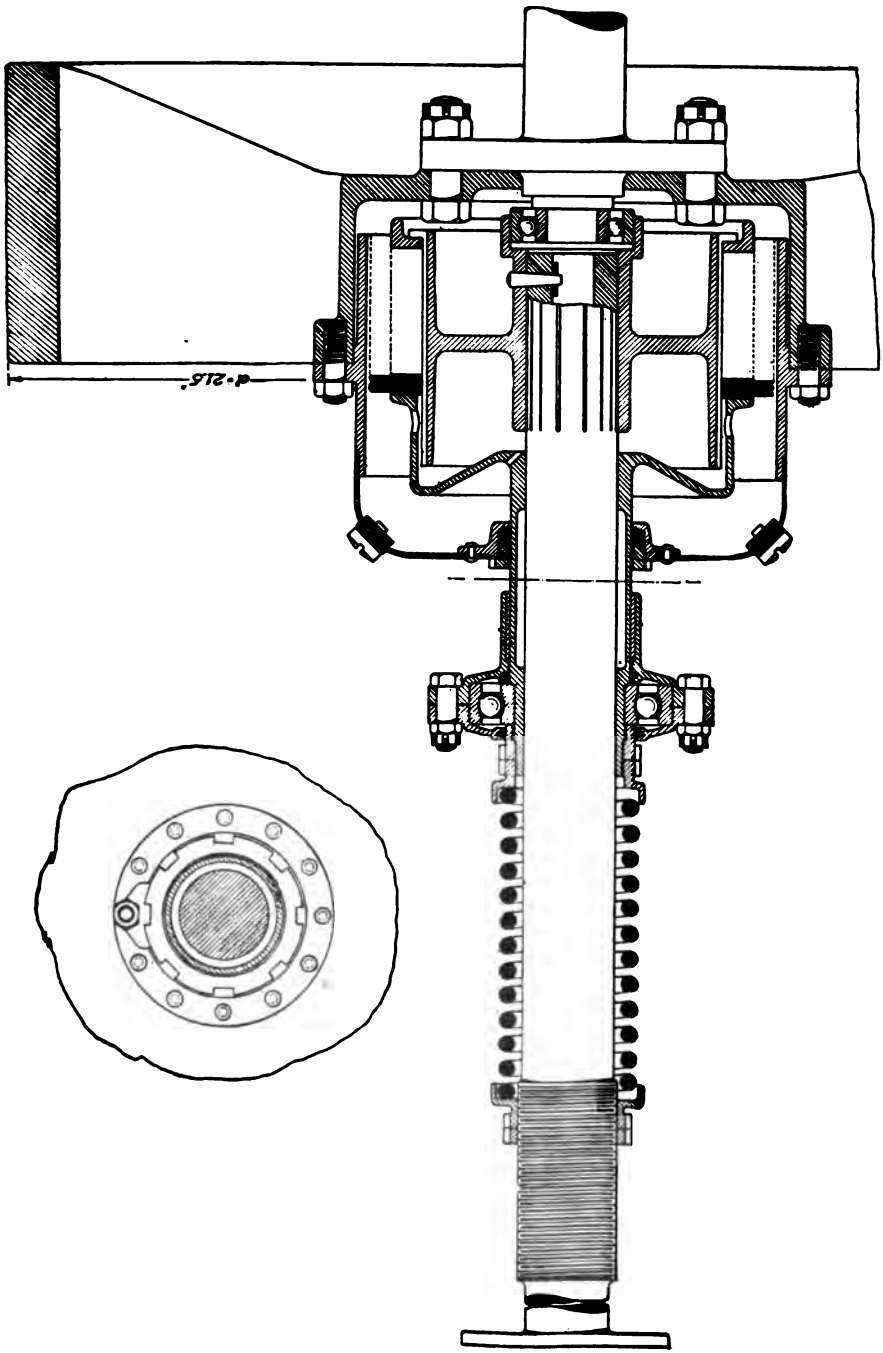

SIMPLEX LUBRICATED DISC CLUTCH.

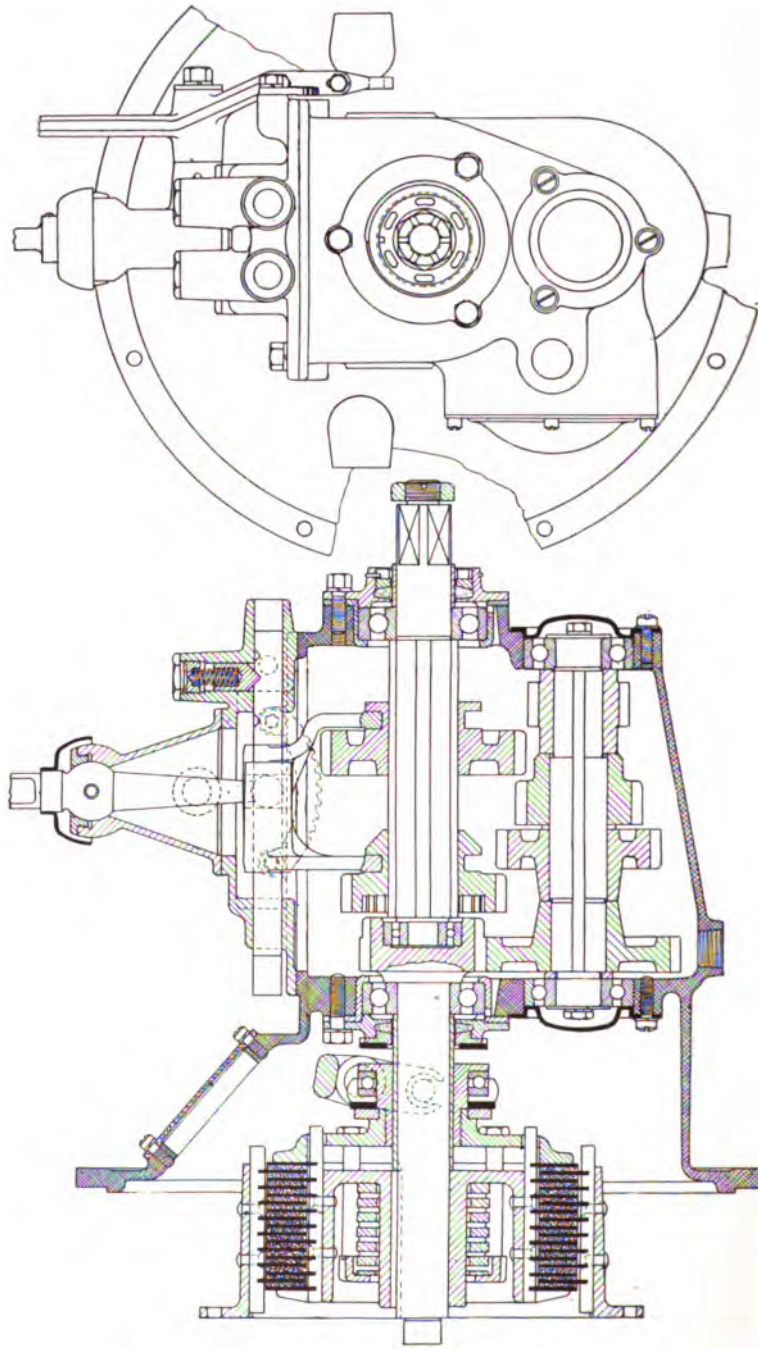

MUNCIE CLUTCH AND CHANGE GEAR.

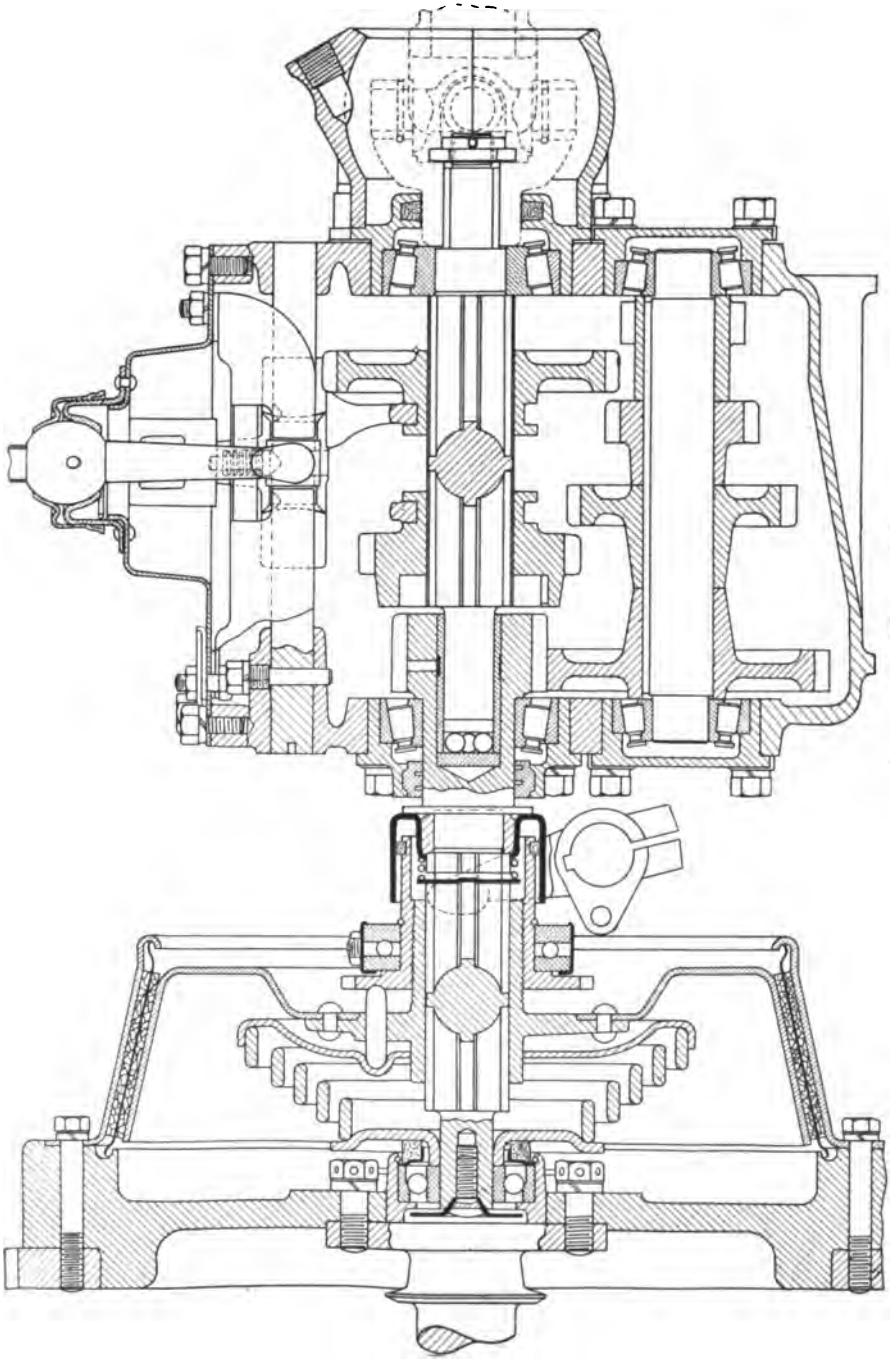

CASE CLUTCH AND CHANGE GEAR.

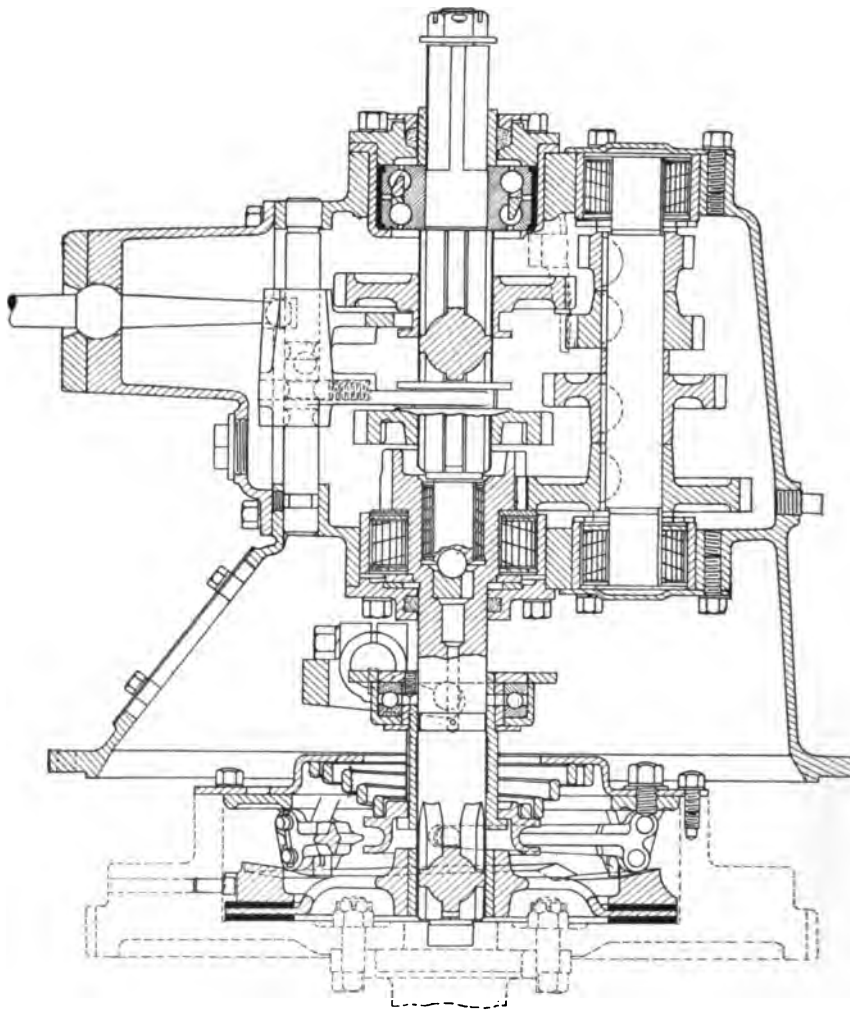

BORG & BECK PLATE CLUTCH AND COVERT CHANGE GEAR.

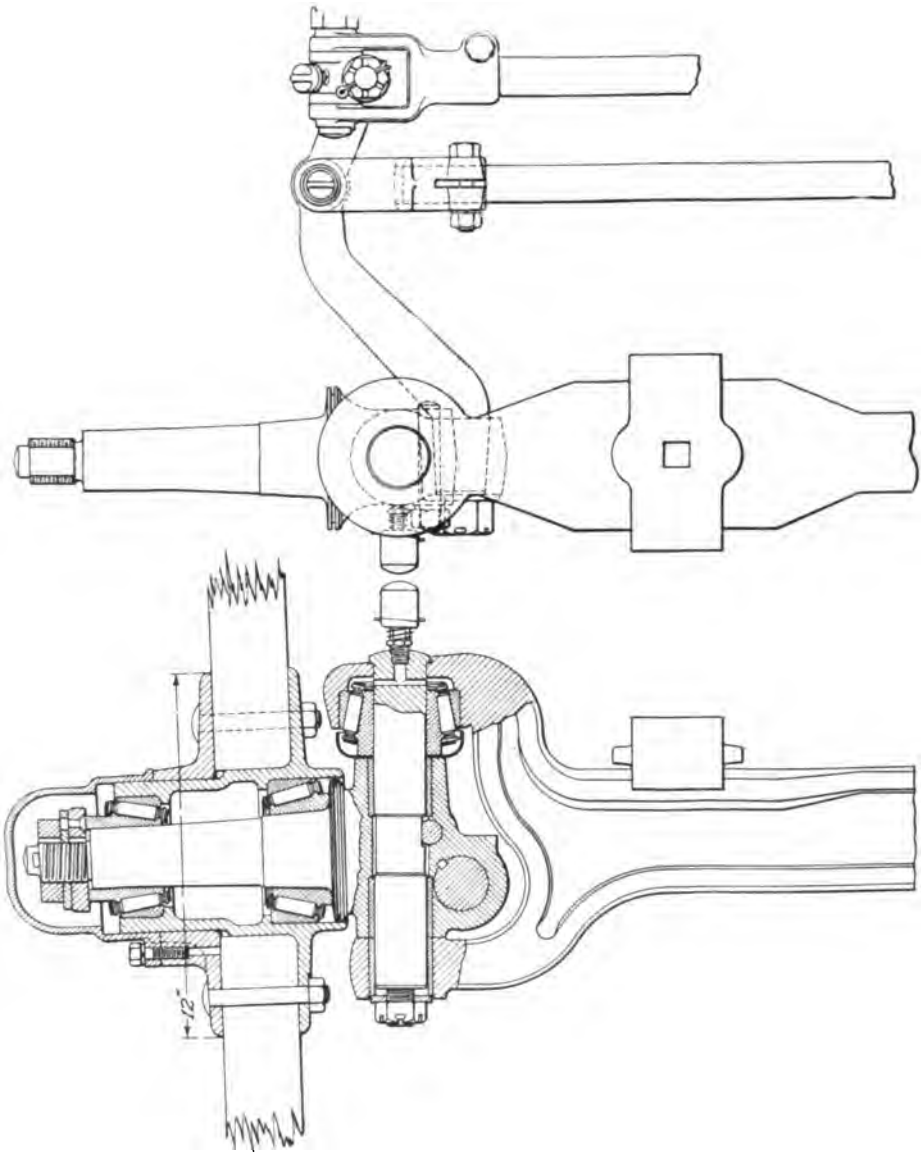

TIMKEN TRUCK FRONT AXLE (7,200 LBS. MAX. LOAD).

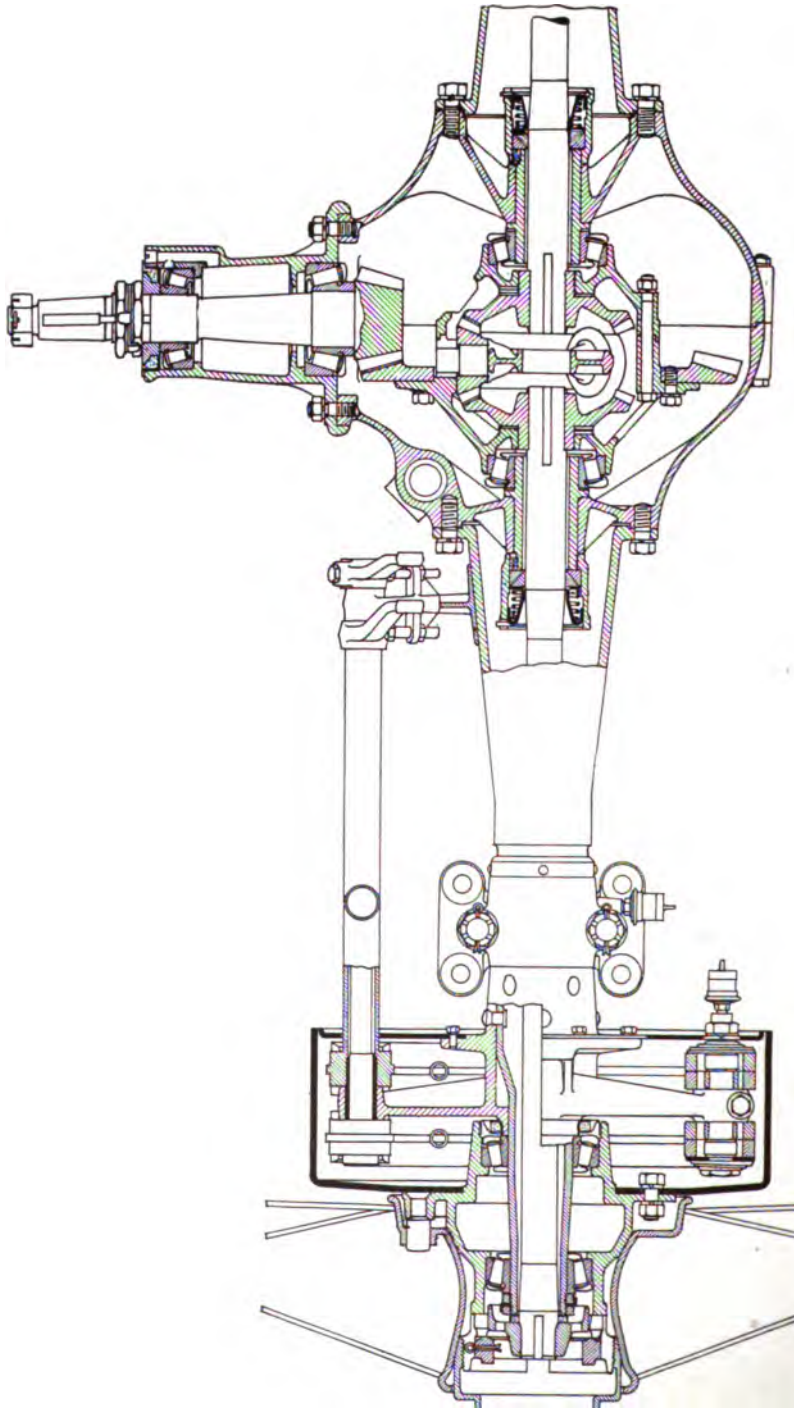

"AMERICAN" PLEASURE CAR REAR AXLE.

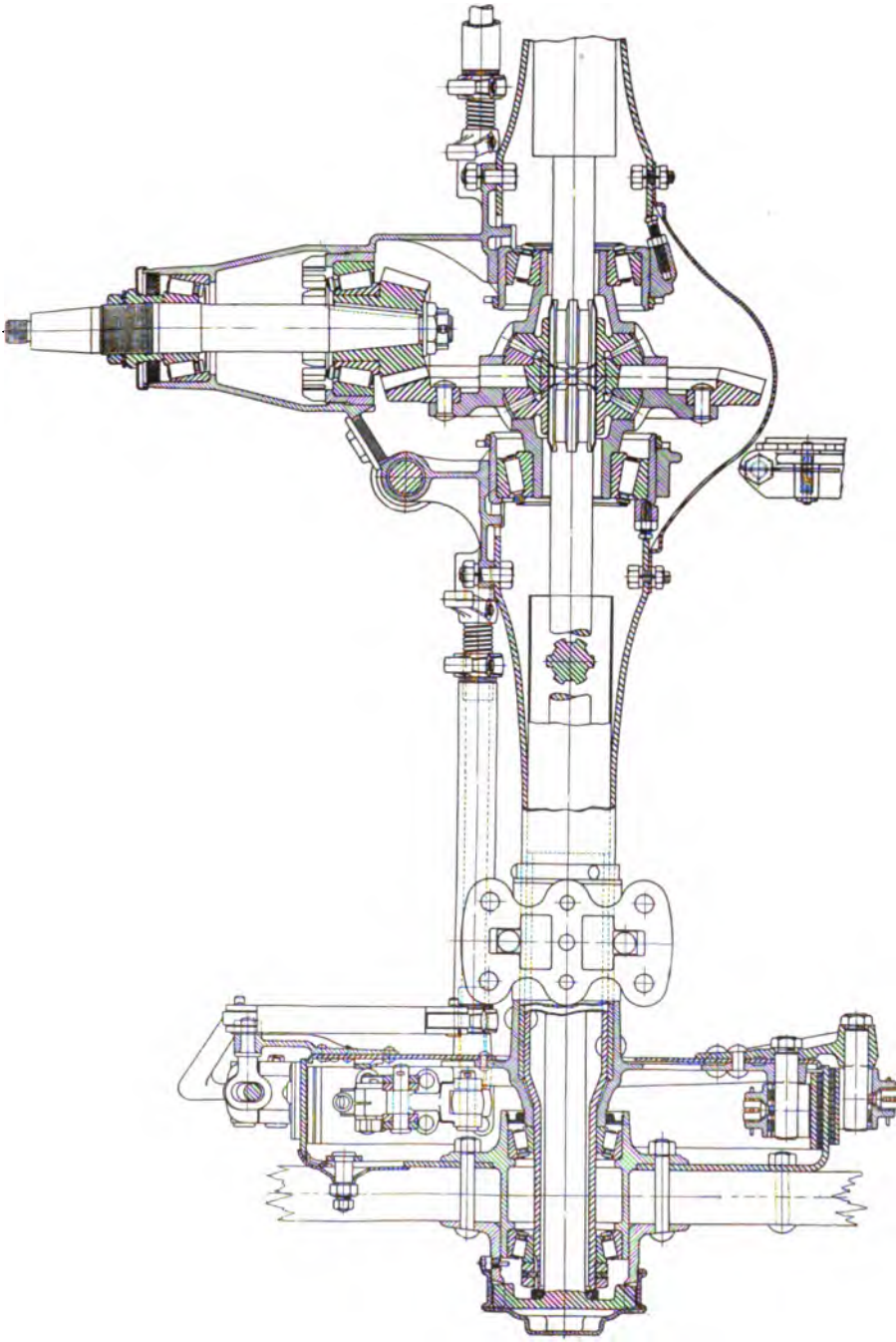

TIMKEN PLEASURE CAR REAR AXLE.

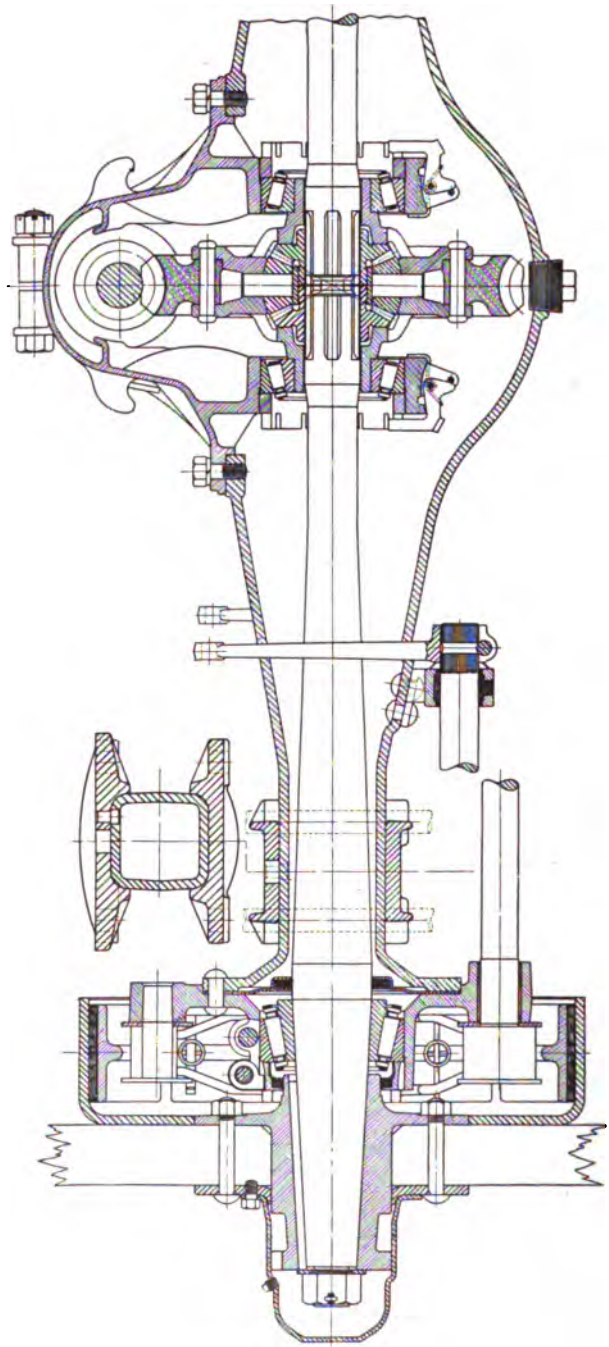

TIMKEN WORM DRIVE TRUCK REAR AXLE.

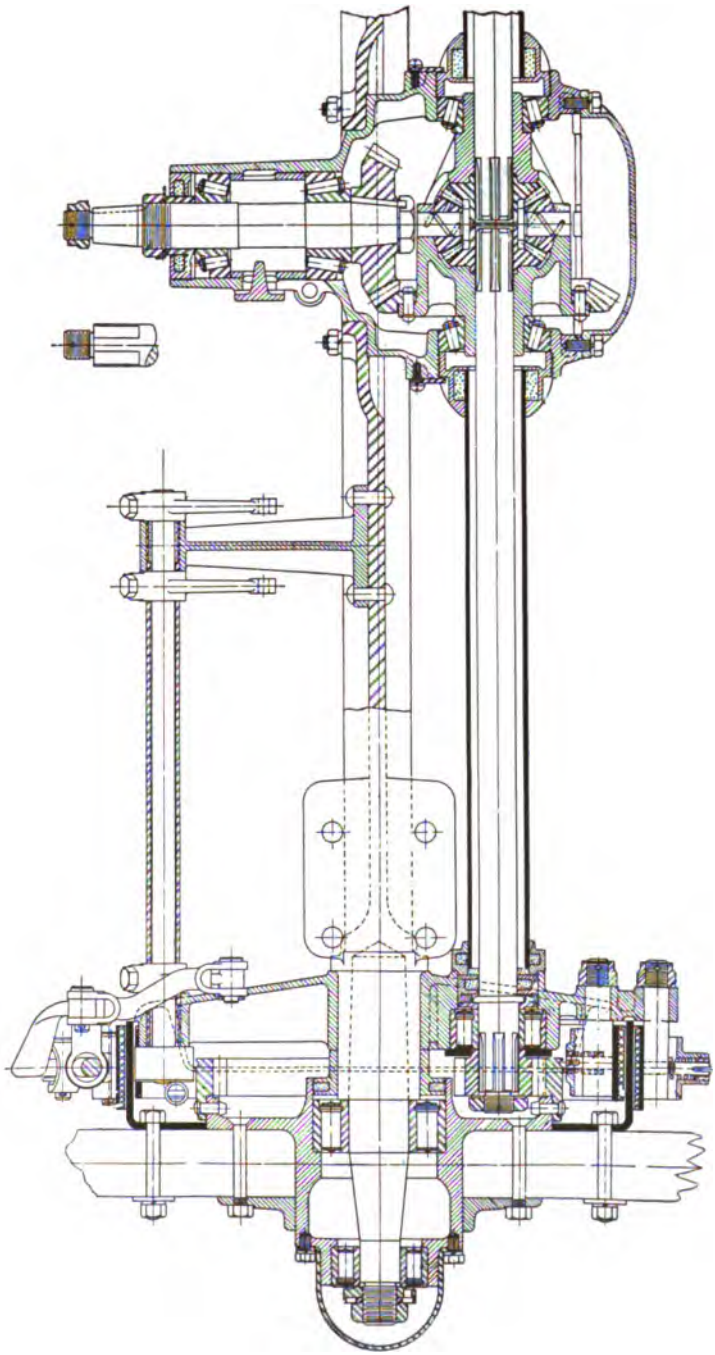

TORBENSEN INTERNAL GEAR DRIVE TRUCK AXLE.

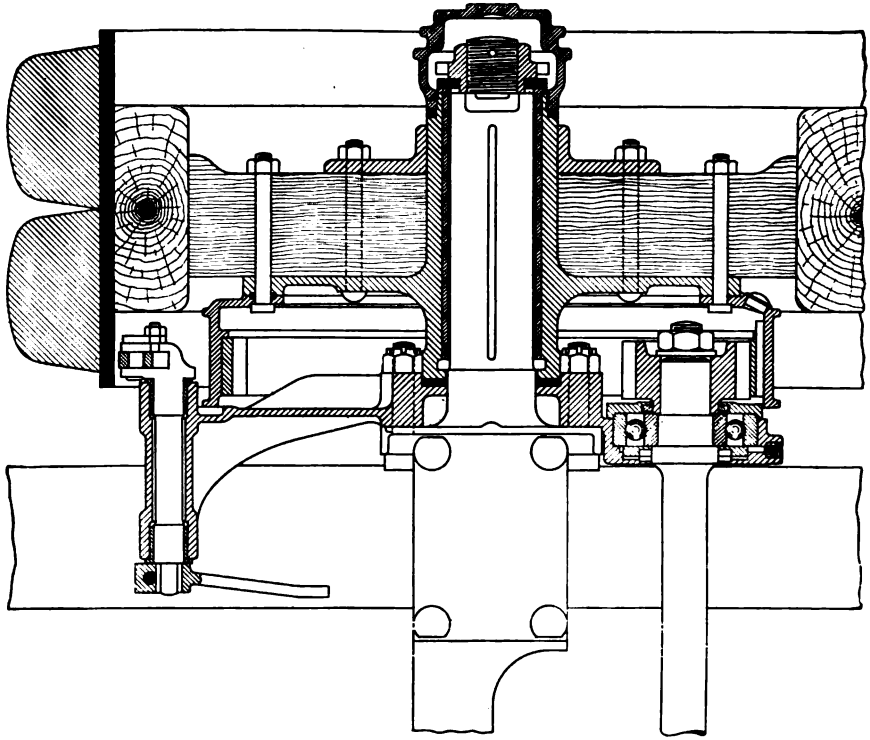

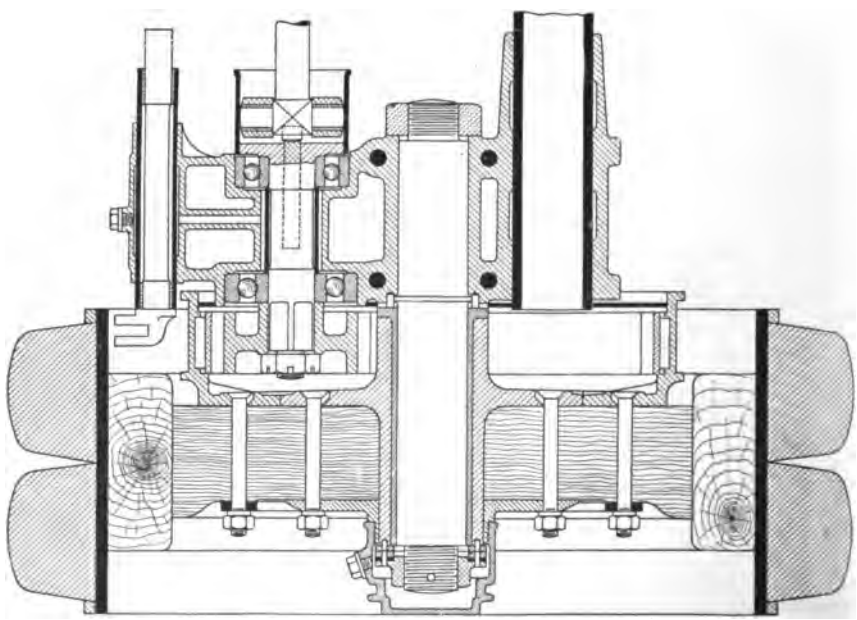

TWO FRENCH INTERNAL GEAR TRUCK DRIVES.

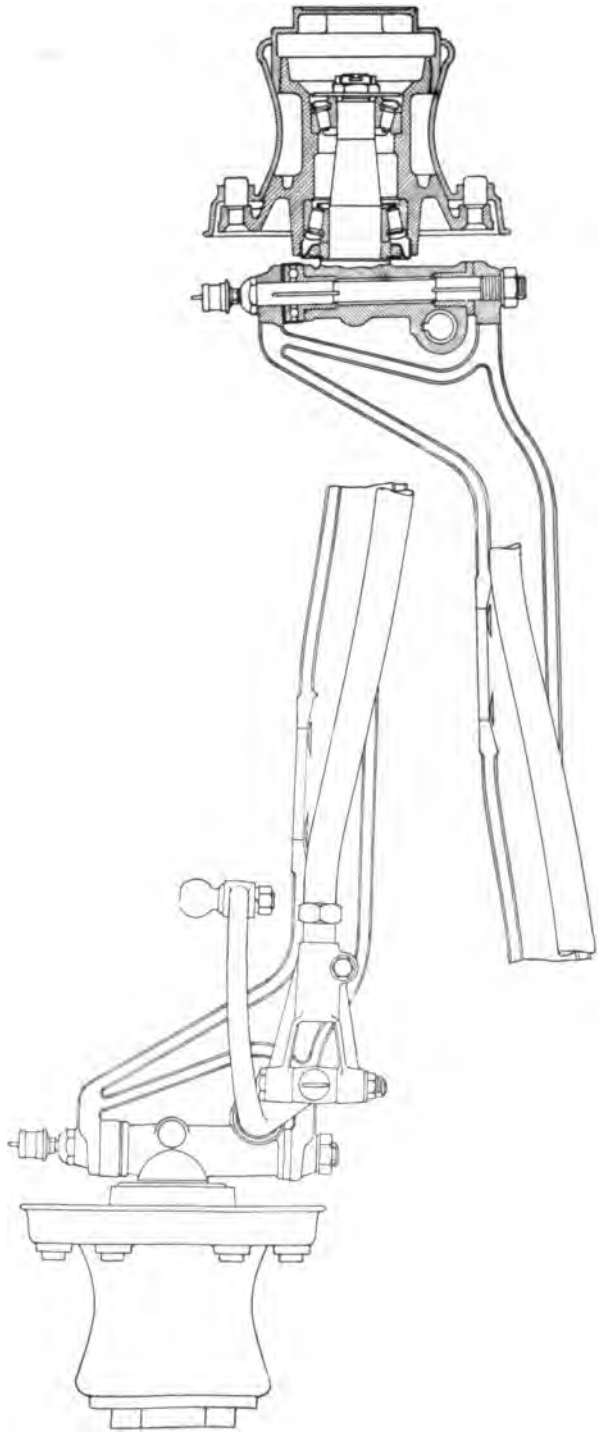

"AMERICAN" PLEASURE CAR FRONT AXLE.

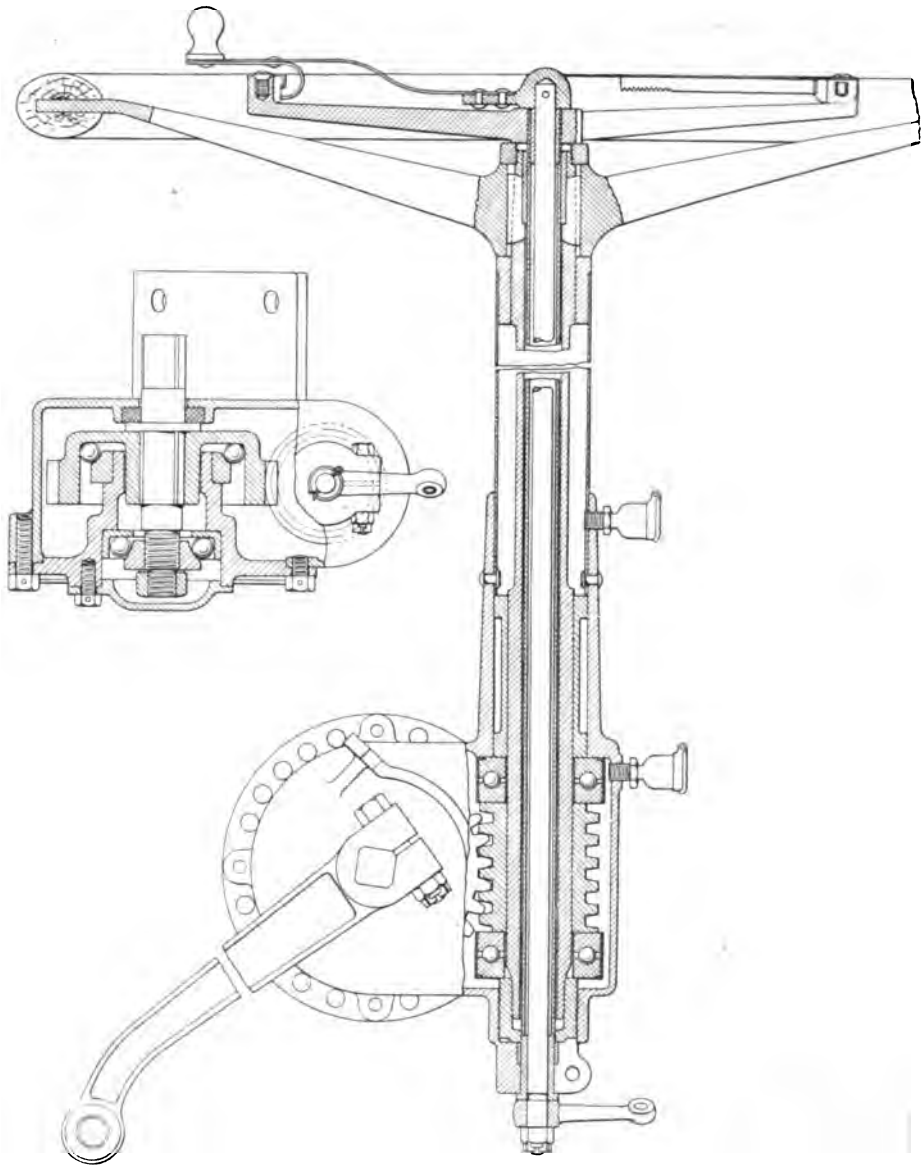

FRANKLIN STEERING GEAR.

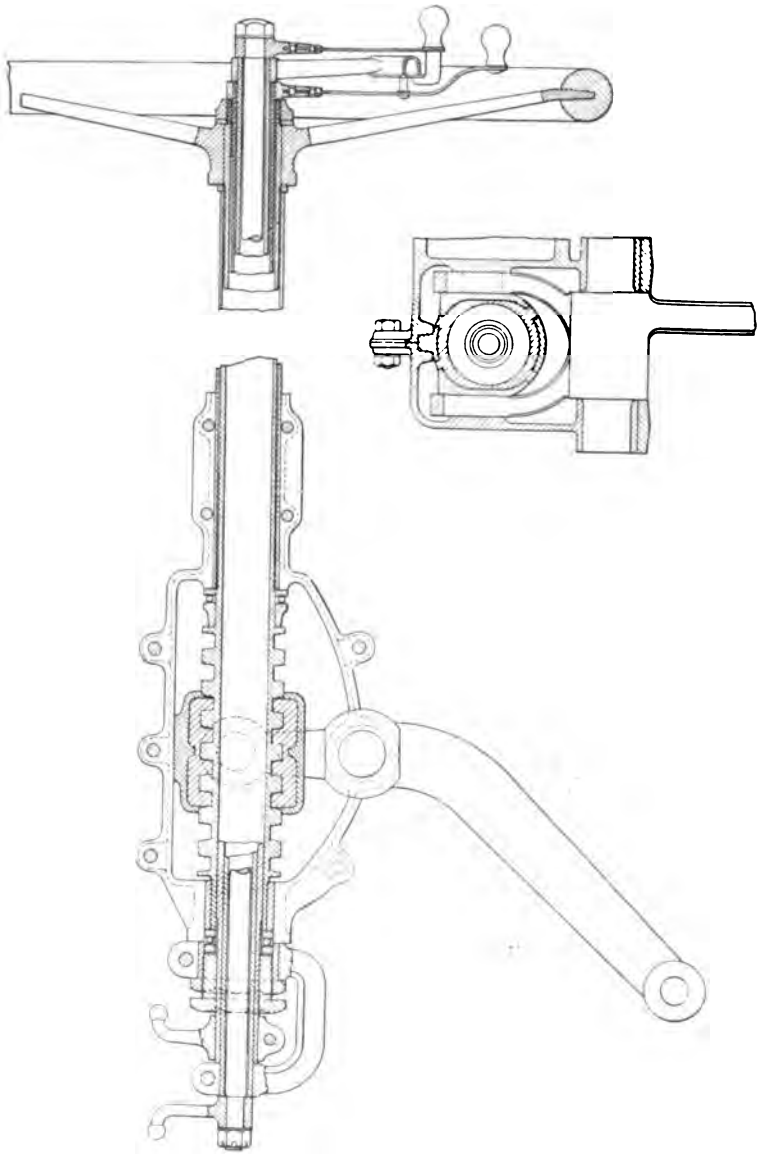

BENZ STEERING GEAR.

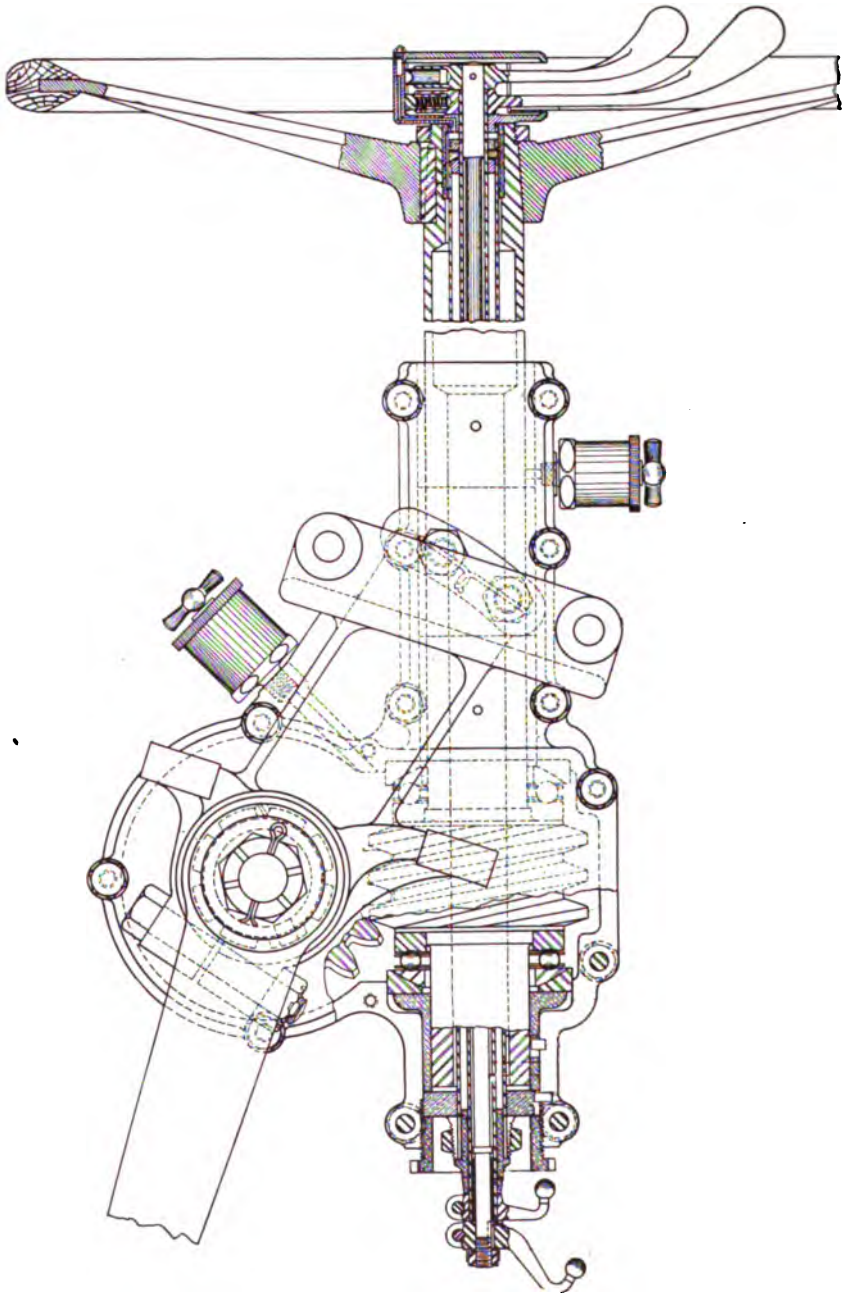

PEERLESS TRUCK STEERING GEAR.

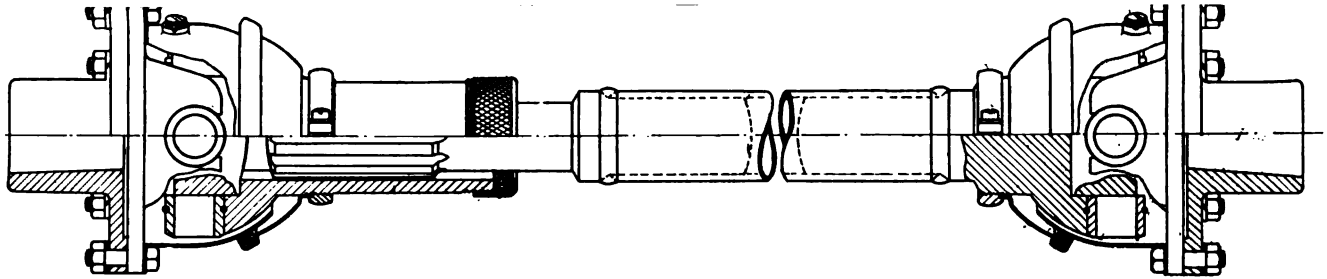

SPICER PROPELLER SHAFT ASSEMBLY.

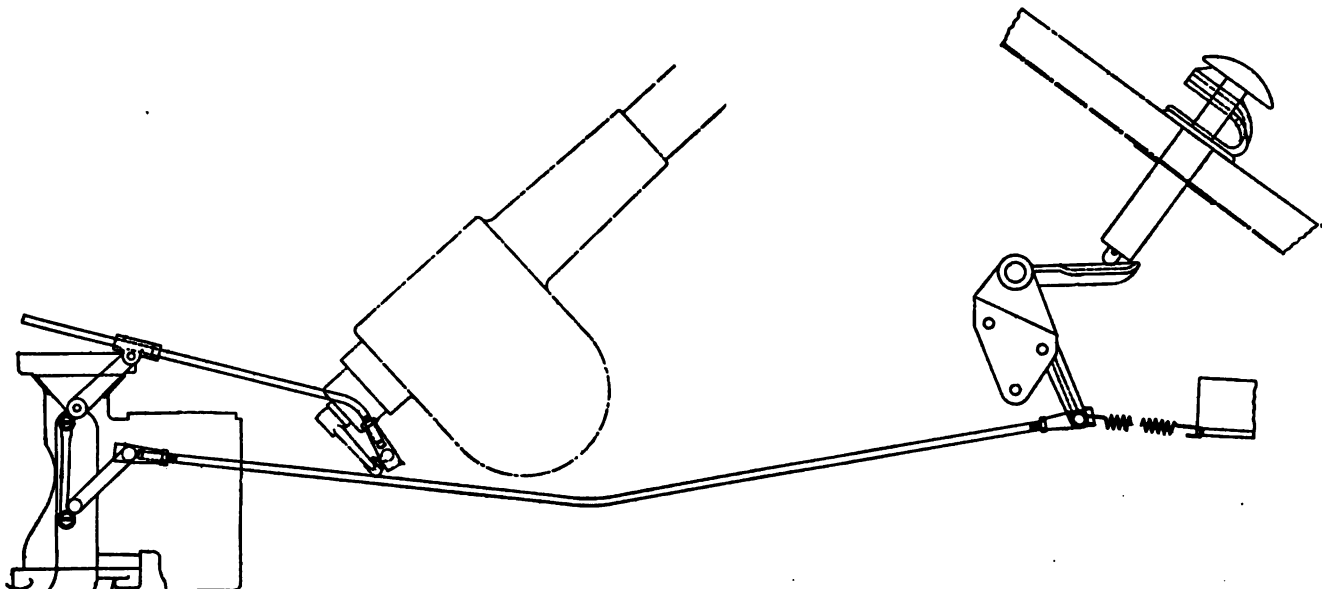

FRANKLIN THROTTLE CONTROL ASSEMBLY.

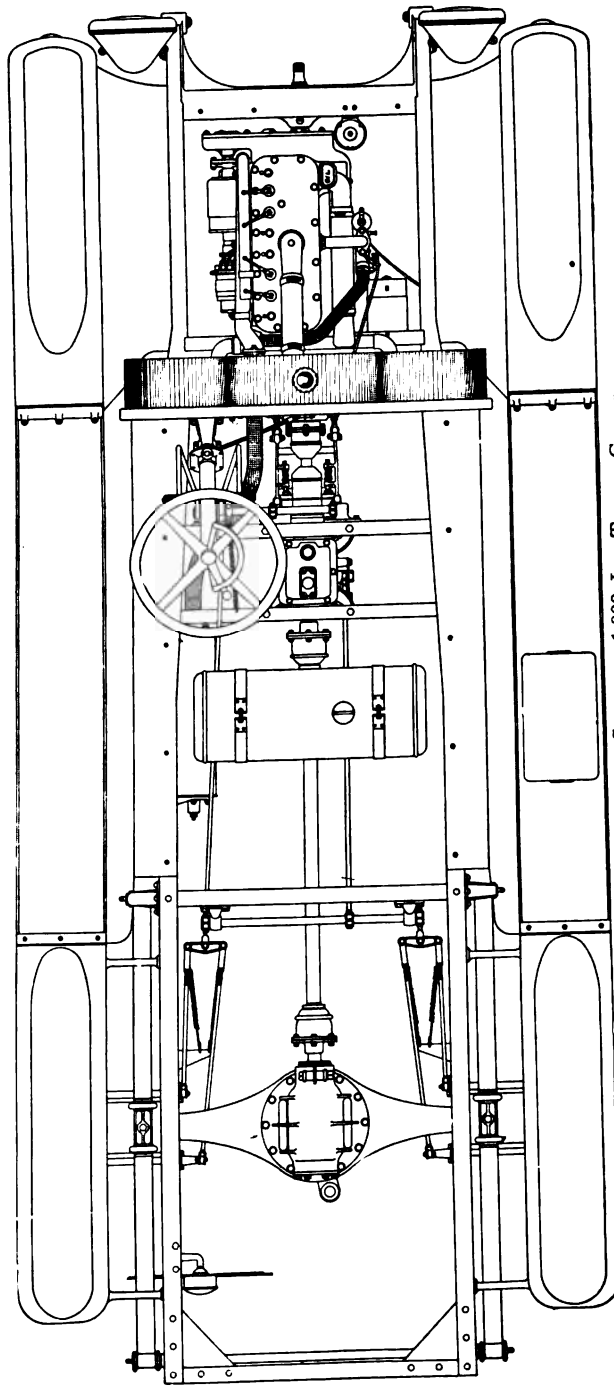

PLAN VIEW OF LIPPARD-STEWART 1,000 LB. TRUCK CHASSIS.

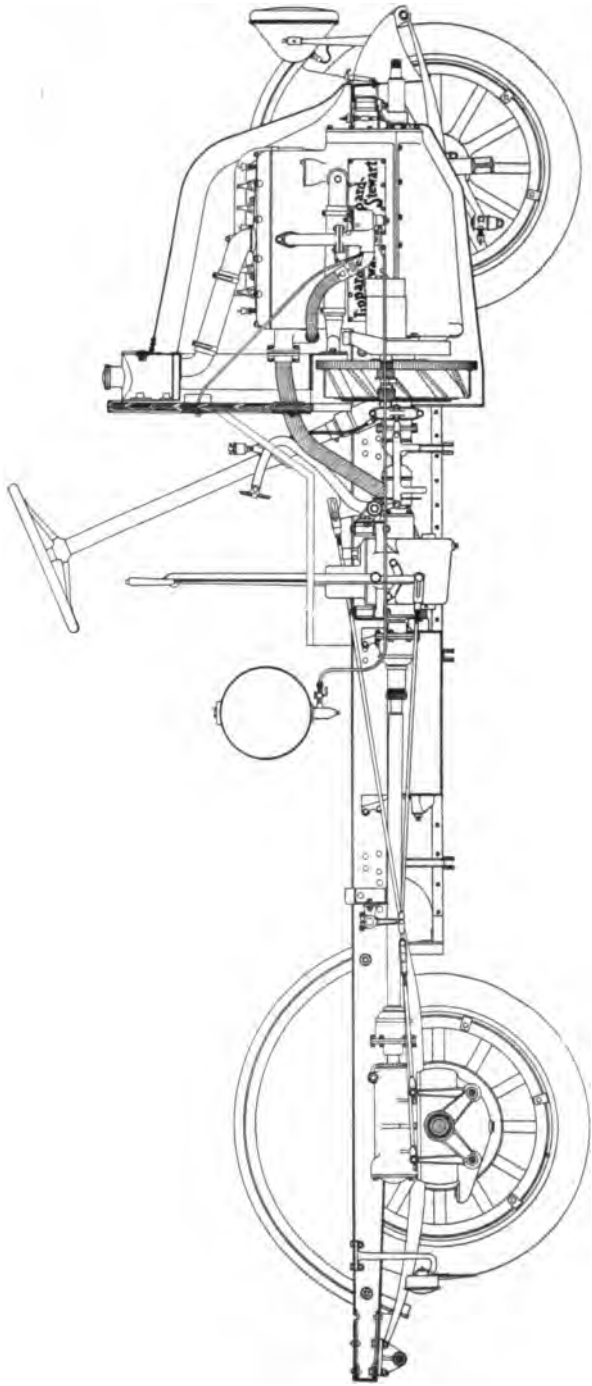

SIDE ELEVATION OF LIPPARD-STEWART 1,000 LB. DELIVERY CHASSIS.

WINTON SPARK AND THROTTLE CONTROL (ABOVE) AND CLUTCH AND BRAKE CONTROL (BELOW).

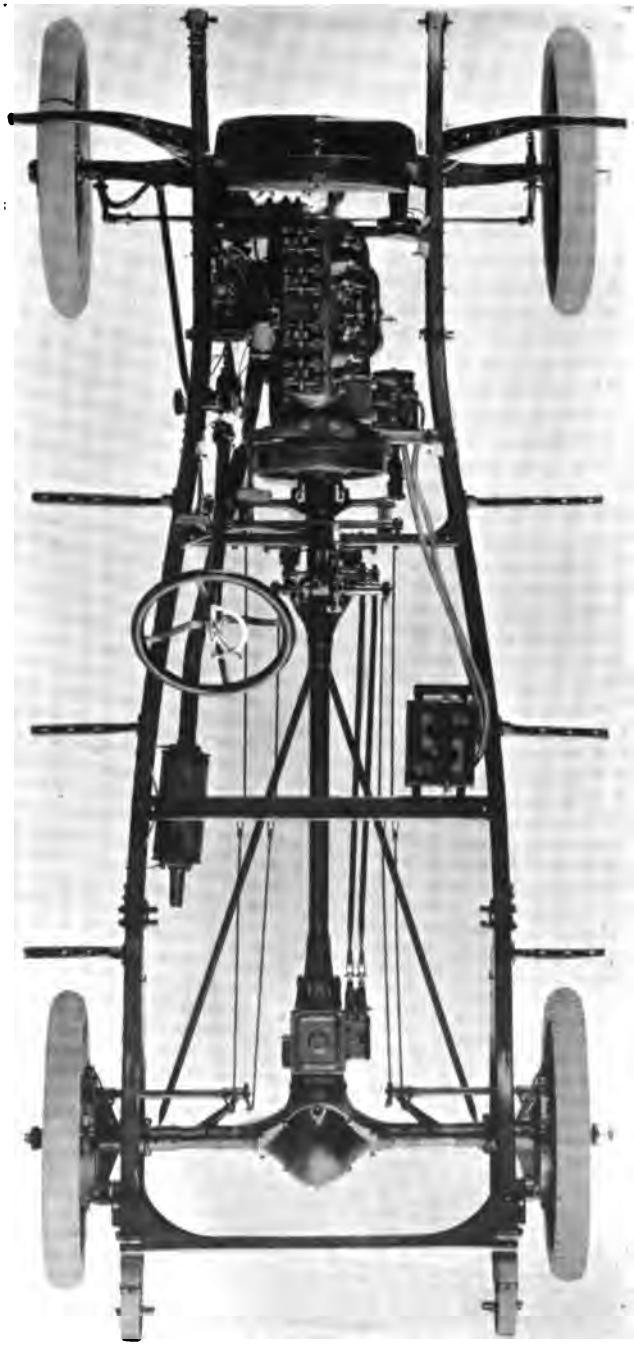

PLAN VIEW OF INTERSTATE FOUR CYLINDER CHASSIS.

LEXINGTON-HOWARD SIX CYLINDER CHASSIS.

PLAN VIEW OF LEXINGTON-HOWARD CHASSIS.

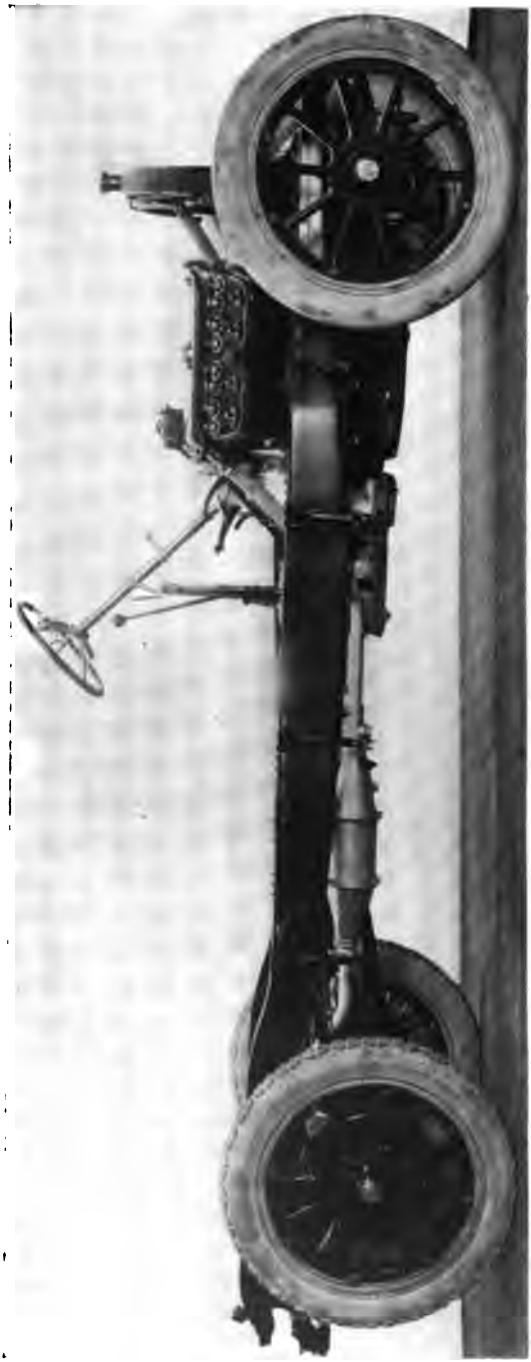

CADILLAC EIGHT CYLINDER CHASSIS MODEL 55.

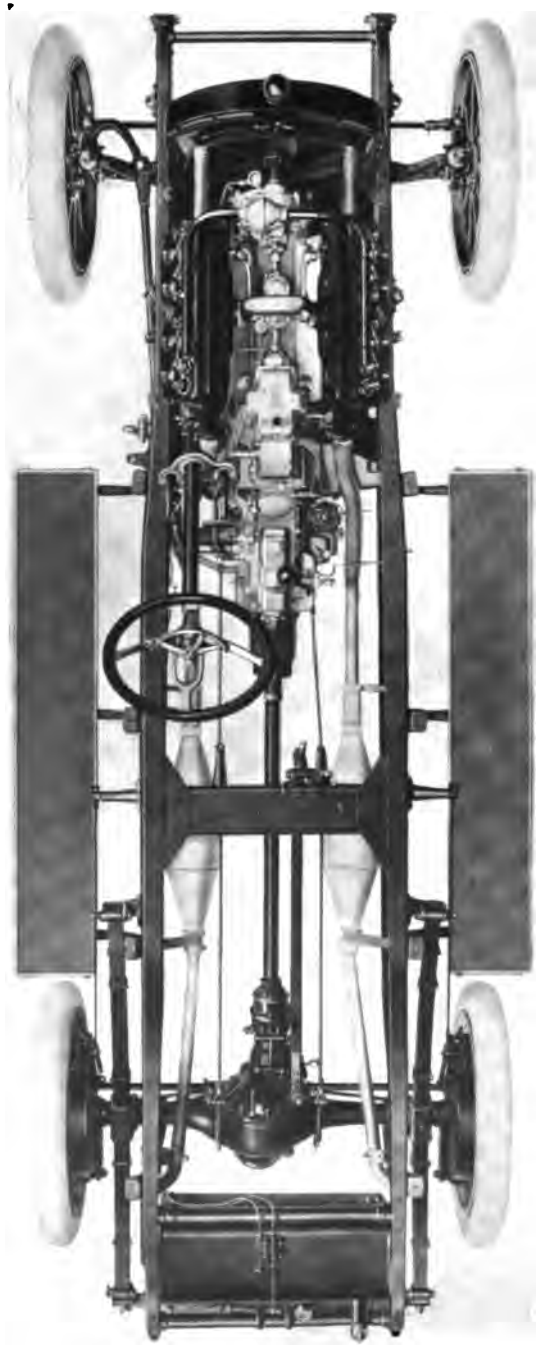

PLAN VIEW OF CADILLAC EIGHT CYLINDER CHASSIS.

PACKARD FIVE TON TRUCK CHASSIS.

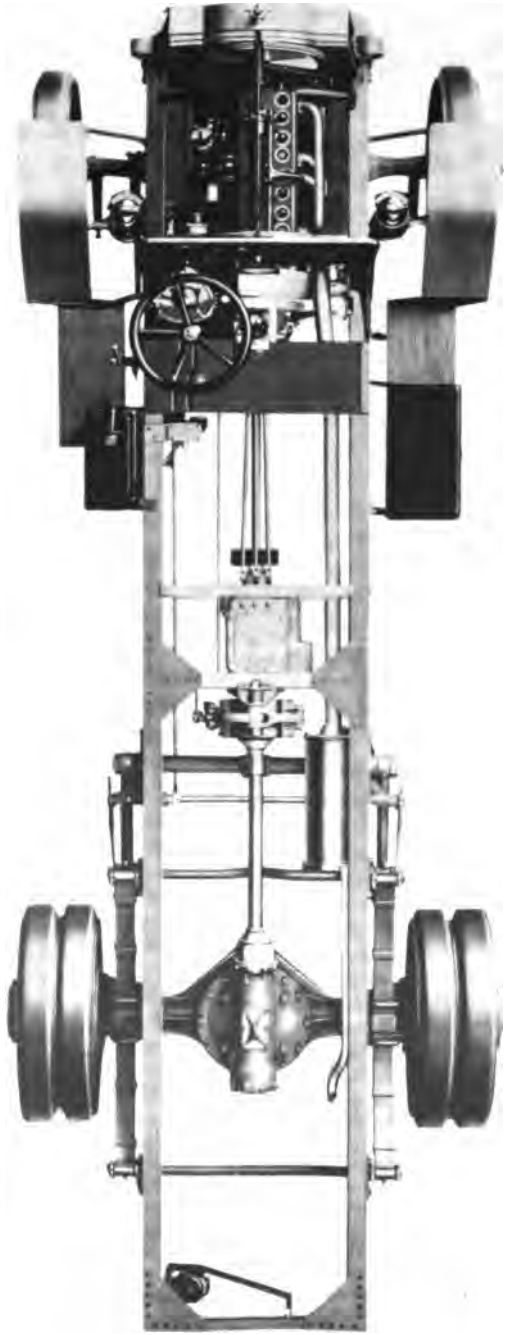

PLAN VIEW OF PACKARD FIVE TON TRUCK CHASSIS.

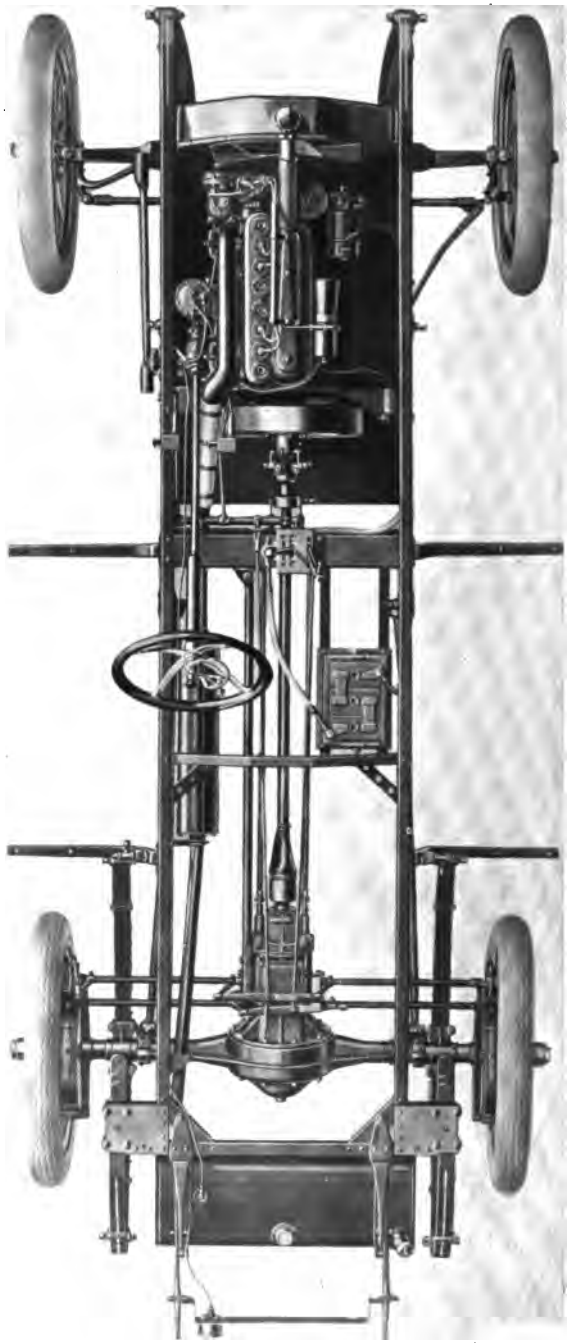

PLAN VIEW OF STUDEBAKER FOUR CYLINDER CHASSIS.

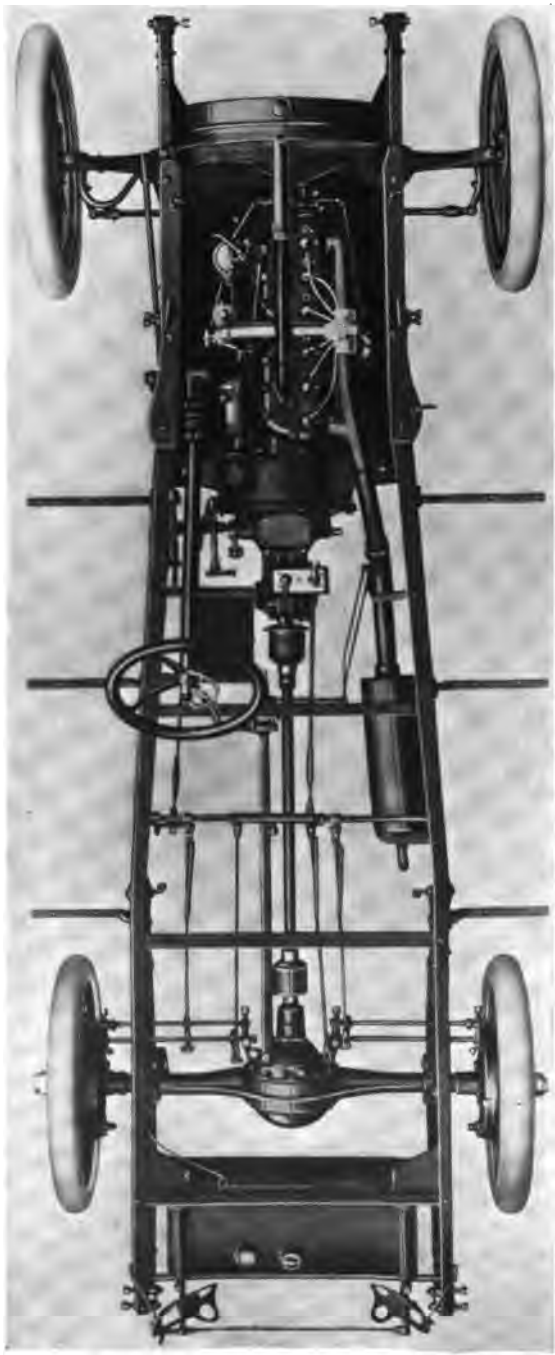

PLAN VIEW OF AUBURN FOUR CYLINDER CHASSIS.

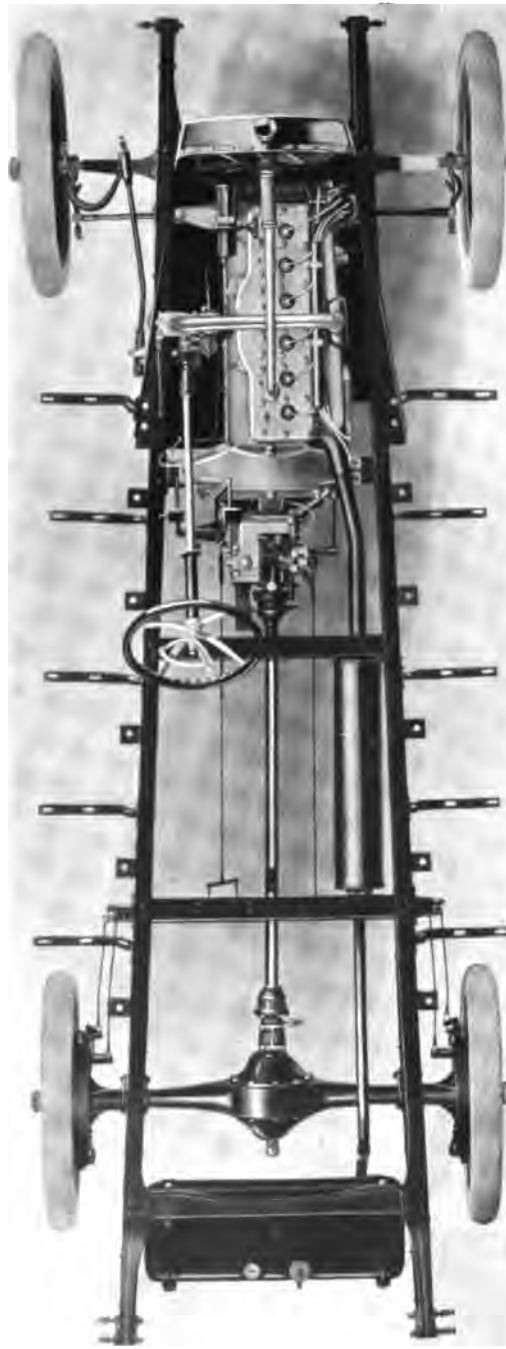

PLAN VIEW OF HUDSON SUPER-SIX CHASSIS.

4 . 2 450
2.2 515
1.6 11.5
-11800
450
2.2

RETURN TO → CIRCULATION DEPARTMENT
202 Main Library

LOAN PERIOD 1 HOME USE	2	3
4	5	6

ALL BOOKS MAY BE RECALLED AFTER 7 DAYS
[illegible] RECHARGES MAY BE MADE 4 DAYS PRIOR TO DUE DATE.
[illegible] PERIODS ARE 1-MONTH, 3-MONTHS, AND 1-YEAR.
RENEWALS: CALL (415) 642-3405

DUE AS STAMPED BELOW

AUG 12 1990

AUG MSC JUL 24 1990

UNIVERSITY OF CALIFORNIA, BERKELEY
FORM NO. DD6, 60m, 1/83 BERKELEY, CA 94720

YC 97300

GENERAL LIBRARY - U.C. BERKELEY
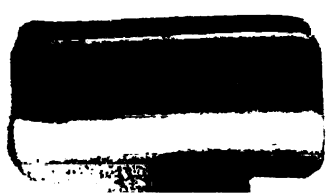
B000322776